DTIC FILE COPY

(2)

NAVAL POSTGRADUATE SCHOOL

Monterey, California

AD-A186 552

DTIC
ELECTE
NOV 3 0 1987
S D
D

THESIS

OPTIMIZING HF ANTENNA SYSTEMS
ON THE DOLPHIN AND SEA HAWK HELICOPTERS

by

James B. Crawford

September 1987

Thesis Advisor R.W. Adler

Approved for public release; distribution is unlimited.

87 11 05

UNCLASSIFIED
SECURITY CLASSIFICATION OF THIS PAGE

REPORT DOCUMENTATION PAGE

1a REPORT SECURITY CLASSIFICATION: UNCLASSIFIED	1b RESTRICTIVE MARKINGS
2a SECURITY CLASSIFICATION AUTHORITY	3 DISTRIBUTION/AVAILABILITY OF REPORT: Approved for public release; distribution is unlimited
2b DECLASSIFICATION/DOWNGRADING SCHEDULE	
4 PERFORMING ORGANIZATION REPORT NUMBER(S)	5 MONITORING ORGANIZATION REPORT NUMBER(S)
6a NAME OF PERFORMING ORGANIZATION: Naval Postgraduate School; 6b OFFICE SYMBOL (If applicable): 62	7a NAME OF MONITORING ORGANIZATION: Naval Postgraduate School
6c ADDRESS (City, State, and ZIP Code): Monterey, California 93943-5000	7b ADDRESS (City, State, and ZIP Code): Monterey, California 93943-5000
8a NAME OF FUNDING/SPONSORING ORGANIZATION; 8b OFFICE SYMBOL (If applicable)	9 PROCUREMENT INSTRUMENT IDENTIFICATION NUMBER
8c ADDRESS (City, State, and ZIP Code)	10 SOURCE OF FUNDING NUMBERS: PROGRAM ELEMENT NO; PROJECT NO; TASK NO; WORK UNIT ACCESSION NO

11 TITLE (Include Security Classification)
OPTIMIZING HF ANTENNA SYSTEMS ON THE DOLPHIN AND SEA HAWK HELICOPTERS

12 PERSONAL AUTHOR(S)
Crawford, James B.

13a TYPE OF REPORT	13b TIME COVERED	14 DATE OF REPORT (Year, Month, Day)	15 PAGE COUNT
Master's Thesis	FROM _____ TO _____	1987, September	394

16 SUPPLEMENTARY NOTATION

17 COSATI CODES			18 SUBJECT TERMS (Continue on reverse if necessary and identify by block number)
FIELD	GROUP	SUB-GROUP	Antenna Modeling; Antennas, HF; Numerical Electromagnetic Code (NEC)

19 ABSTRACT (Continue on reverse if necessary and identify by block number)

Making an aircraft available and modifying it to test various antenna systems and configurations is extremely costly. The computer model is an excellent alternative means of analyzing antenna systems for optimum communication system performance. In this study electromagnetic "wire grid" computer models of two helicopters and eight HF antenna configurations are developed using Interactive Graphics Utility for Automated NEC Analysis (IGUANA). Numerical Electromagnetics Code (NEC) is used to obtain radiation patterns, and the Advanced Prophet program is used to develop the criteria for judging system effectiveness. These computer results compare favorably with test range data, showing great savings of cost. They provide the additional advantage of showing radiation patterns at an elevated angle for sky wave propagation analysis (patterns which cannot be obtained on an antenna test range).

20 DISTRIBUTION/AVAILABILITY OF ABSTRACT	21 ABSTRACT SECURITY CLASSIFICATION
☒ UNCLASSIFIED/UNLIMITED ☒ SAME AS RPT ☐ DTIC USERS	UNCLASSIFIED
22a NAME OF RESPONSIBLE INDIVIDUAL: Prof. R. W. Adler	22b TELEPHONE (Include Area Code): 408-646-2352; 22c OFFICE SYMBOL: 62Ab

DD FORM 1473, 84 MAR — 83 APR edition may be used until exhausted. All other editions are obsolete.

SECURITY CLASSIFICATION OF THIS PAGE
UNCLASSIFIED

Approved for public release; distribution is unlimited

Optimizing HF Antenna Systems on the Dolphin and Sea Hawk Helicopters

by

James B. Crawford
Lieutenant Commander, United States Coast Guard
B.S., United States Coast Guard Academy, 1974

Submitted in partial fulfillment of the
requirements for the degree of

MASTER OF SCIENCE IN AERONAUTICAL ENGINEERING

from the

NAVAL POSTGRADUATE SCHOOL
September 1987

Author: _____
James B. Crawford

Approved by: _____
R.W. Adler, Thesis Advisor

_____
M.F. Platzer, Chairman
Department of Aeronautical Engineering

_____
G.E. Schacher
Dean of Science and Engineering

ABSTRACT

Making an aircraft available and modifying it to test various antenna systems and configurations is extremely costly. The computer model is an excellent alternative means of analyzing antenna systems for optimum communication system performance. In this study electromagnetic "wire grid" computer models of two helicopters and eight HF antenna configurations are developed using Interactive Graphics Utility for Automated NEC Analysis (IGUANA). Numerical Electromagnetics Code (NEC) is used to obtain radiation patterns, and the Advanced Prophet program is used to develop the criteria for judging system effectiveness. These computer results compare favorably with test range data, showing great savings of cost. They provide the additional advantage of showing radiation patterns at an elevated angle for skywave propagation analysis (patterns which cannot be obtained on an antenna test range).

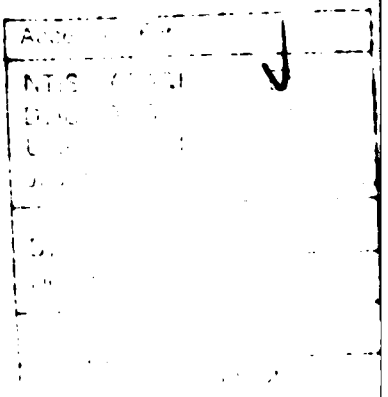

A-1 23

TABLE OF CONTENTS

I. INTRODUCTION ---------- 9

A. NEED FOR THE STUDY ---------- 9

B. STATEMENT OF THE PROBLEM ---------- 9

C. PREVIOUS WORK ---------- 10

D. SCOPE OF THE THESIS ---------- 12

II. SKY WAVE PROPAGATION ---------- 14

A. NATURE OF THE IONOSPHERE ---------- 15

B. PROPAGATION VIA THE IONOSPHERE ---------- 15

C. COMPUTER SIMULATION ---------- 18

D. EFFECTIVE COMMUNICATION ---------- 19

III. MODELING ---------- 25

A. NUMERICAL ELECTROMAGNETICS CODE (NEC) ------ 25

B. INTERACTIVE GRAPHICS UTILITY FOR AUTOMATED NEC ANALYSIS (IGUANA) ---------- 26

C. DOLPHIN MODEL ---------- 27

D. SEA HAWK MODEL ---------- 29

E. NEC RUNS ---------- 47

IV. RESULTS ---------- 49

A. GENERAL ---------- 49

B. DOLPHIN ---------- 54

C. SEA HAWK ---------- 55

V. CONCLUSIONS AND RECOMMENDATIONS ---------- 57

A. DOLPHIN ---------- 57

B. SEA HAWK ---------- 57

C. ADDITIONAL STUDIES ---------- 57

D. SUMMARY ---------- 58

LIST OF REFERENCES ---------- 60

APPENDIX A NEC RADIATION PATTERN PLOTS ---------- 62

APPENDIX B ADVANCED PROPHET SCENARIO OUTPUT -------- 286

APPENDIX C NEC MODELS ---------- 378

INITIAL DISTRIBUTION LIST ---------- 389

LIST OF FIGURES

Figure No.		Page
1.	Dolphin Long-wire Antenna Configuration	11
2.	Advanced Prophet Critical Ray Angle	17
3.	Advanced Prophet Area Coverage	20
4.	Ground Wave Range vs. Frequency, Vertically Polarized Signal	21
5.	Ground Wave Range vs. Frequency, Horizontally Polarized Signal	22
6.	Dolphin Skin Panels	28
7.	Dolphin Model with Long-wire	30
8.	Dolphin Model with Long-wire, Top View	31
9.	Dolphin Model with Tuned Monopole	32
10.	Dolphin Model with Tuned Monopole, Top View	33
11.	Dolphin Model with Transmission Line	34
12.	Dolphin Model with Transmission Line, Top View	35
13.	Dolphin Model with Long Shunted Loop	36
14.	Dolphin Model with Long Shunted Loop, Top View	37
15.	Sea Hawk Model with Long-wire	39
16.	Sea Hawk Model with Long-wire, Top View	40
17.	Sea Hawk Model with Navy Tuned Monopole	41
18.	Sea Hawk Model with Navy Tuned Monopole, Top View	42

19. Sea Hawk Model with CG Tuned Monopole --------- 43

20. Sea Hawk Model with CG Tuned Monopole,
Top View ---------- 44

21. Sea Hawk Model with Transmission Line --------- 45

22. Sea Hawk Model with Transmission Line,
Top View ---------- 46

23. Radiation Pattern, Horizontal Plane,
Theta = 90 ---------- 50

24. Radiation Pattern, Elevated Plane,
Theta = 26 ---------- 51

25. Radiation Pattern, Vertical Plane, Phi = 0 ---- 52

26. Radiation Pattern, Offset Vertical Plane,
Phi = 45 ---------- 53

ACKNOWLEDGEMENT

The author wishes to express sincere appreciation to Dr. R. W. Adler for his assistance and guidance throughout this thesis, and to Victoria L. Crawford for her support and for her help in ensuring that the models were error-free.

I. INTRODUCTION

A. NEED FOR THE STUDY

The Coast Guard relies heavily on helicopters to perform its primary missions of enforcement of laws & treaties, search and rescue, aids to navigation, and maritime defense. Two types of helicopters are used in the Coast Guard. The medium-range recovery (MRR) helicopter is the HH-3F Pelican which will be replaced shortly by the HH-60J Sea Hawk. The transition from the HH-52A Guardian to the HH-65A Dolphin is almost complete. The Dolphin is the Coast Guard's short-range recovery (SRR) helicopter. In executing their assigned missions both the MRR and SRR routinely operate from the coast line out to 200 nautical miles off shore and remain below 1000 feet for most of the mission. It is essential for the helicopters to maintain effective communications with a Coast Guard communication station to exchange operational information and receive direction as well as for flight following.

B. STATEMENT OF THE PROBLEM

The Dolphin was designed to use a Rockwell-Collins 718U-5 HF radio transceiver and a long-wire antenna to provide reliable two-way voice communications at ranges

of up to 200 nautical miles. Figure 1, taken from the HH-65A flight handbook, illustrates how the long-wire antenna runs along the tail boom and up the vertical tail on the starboard side, through a non-metallic transition tube, and doubles back along the port side of the helicopter. During development flight tests the operational performance of this system was found to be marginal at best. Shortly after accepting the Dolphin for operational use several aircraft experienced structural failures of the long-wire resulting in wire ingestion into the fenestron. Consequently, the long-wire was shortened to exclude the portion along the vertical tail. This modified antenna exacerbated the performance problems of the Dolphin's HF system.

The MRR replacement helicopter, the Sea Hawk, was reported to have similarly poor HF operational performance and the Navy has zeroed in on the long-wire antenna as the chief cause of the problem. [Ref. 1]

C. PREVIOUS WORK

Tests were recently conducted at the Naval Air Test Center, Naval Air Station, Patuxent River, Maryland, to determine the operating performance of the HF long-wire antenna installations on both the Dolphin and the Sea Hawk. Similar tests were conducted with a Rockwell-Collins 437R-2 tuned HF monopole antenna system installed

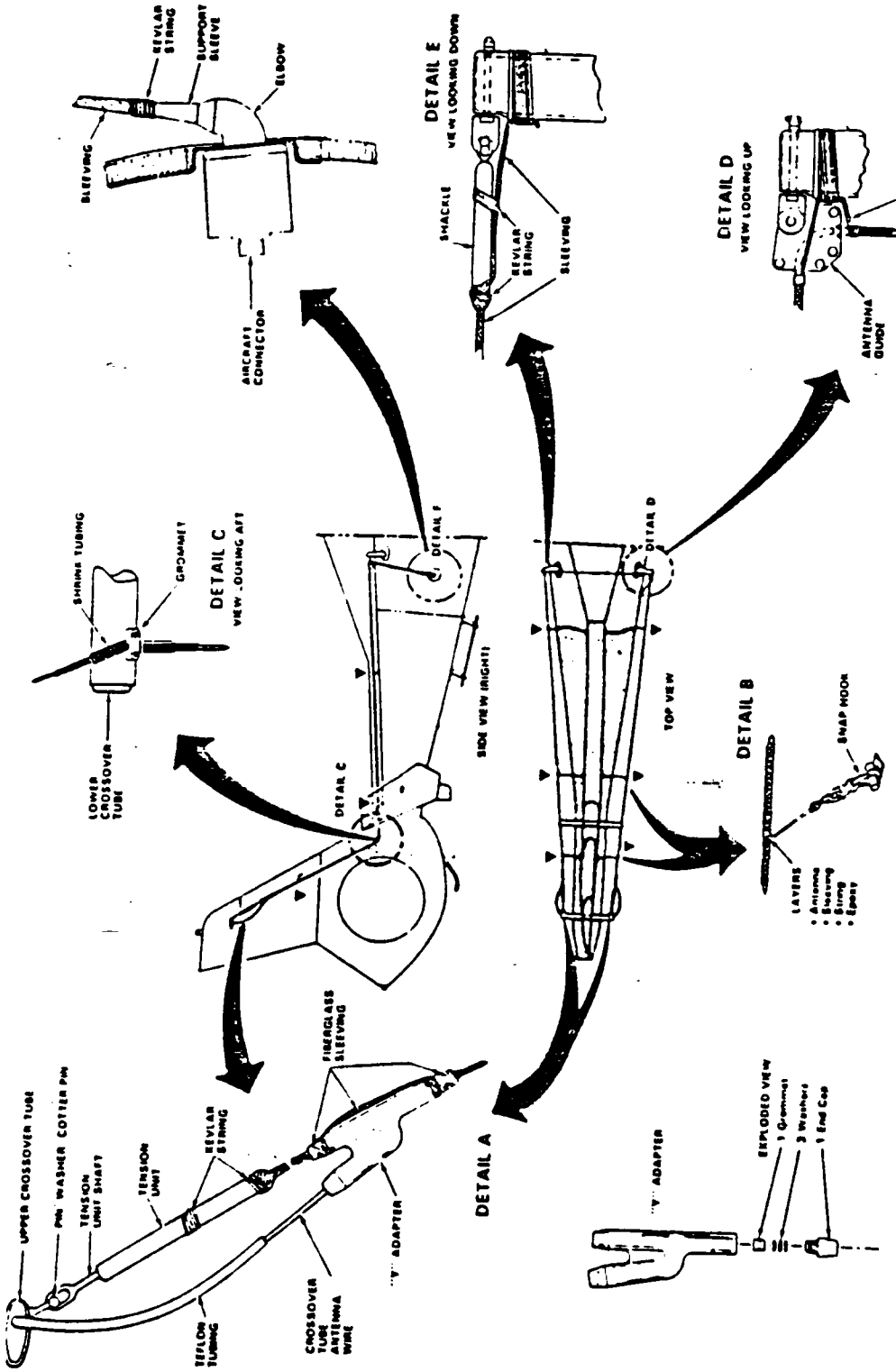

Figure 1 Dolphin Long-wire Antenna Configuration.

on each helicopter. Comparison of radiation patterns in the horizontal plane showed that the tuned monopole system improved HF performance, particularly in the vertical polarization. [Refs. 1, 2]

D. SCOPE OF THE THESIS

Actual aircraft modification to test various antenna systems and configurations has proved extremely costly and time consuming. In this thesis study computer modeling was used as an alternative method for testing HF antenna system performance. The Interactive Graphics Utility for Automated NEC Analysis (IGUANA) computer program, prepared for NOSC by System Development Corporation, was used to develop electromagnetic computer models for the Dolphin and Sea Hawk helicopters as well as for various configurations of long-wire, monopole, and shorted-loop type antennas. These computer models were used as input for the Numerical Electromagnetics Code (NEC), a computer program developed at Lawrence Livermore Laboratory under the sponsorship of the Naval Ocean Systems Center (NOSC) and the Air Force Weapons Laboratory. Radiation patterns were obtained as the output of the NEC runs.

Typically, an antenna range can conveniently measure radiation patterns only in a plane which is nearly horizontal. Since ground waves over the ocean rarely

propagate more than 100 to 150 nautical miles at best, communication in the HF range frequently requires the use of sky wave propagation. It would be helpful to be able to obtain radiation patterns at any angle above the horizon. The engineer would then have more complete information on which to base a comparative decision on the ground wave/sky wave performance of various antenna systems. The computer models developed in this thesis, combined with the NEC code provide a convenient mechanism to obtain radiation patterns in any direction.

II. SKY WAVE PROPAGATION

Sky wave propagation occurs when a signal is "reflected" or bent in the ionosphere.

A. NATURE OF THE IONOSPHERE

The ionosphere is an ionized region in the upper atmosphere extending from about 60 to 300 kilometers. The portion of the ionosphere which is used for HF propagation is broken down into three regions -- D,E, and F -- with electron density increasing and neutral atmospheric constituents decreasing with altitude. The amount of bending or reflection experienced by a signal in the ionized layers is dependent on frequency. Higher frequency signals are bent to a lesser degree than lower frequency signals and therefore penetrate farther into the ionosphere. There is a certain critical frequency which, if exceeded, allows the signal to escape into space before being sufficiently bent to return to earth. So, for effective sky wave communications, a frequency must be utilized which is lower than the critical frequency.

On the other hand, losses are greater at the lower frequencies due to energy absorption as a result of

setting the ionized particles into motion. Because of the high ratio of neutral to ion particles in the lower ionosphere, an electron passing through this region is more likely to collide with a neutral particle and consequently be unable to re-couple all of its energy back into the wave. By completing its reflection in the lower levels of the ionosphere, the lower frequency signal spends comparatively more time in a region with high neutral particle densities. Higher frequency signals pass more quickly through these high-loss regions and are turned back toward the earth with less overall losses. [Refs. 3, 4]

B. PROPAGATION VIA THE IONOSPHERE

A compromise must be established where the frequency is low enough to permit the signal to be returned to earth but high enough so that all useful energy is not absorbed enroute to the receiving station. The lowest usable frequency is termed the LUF, while the maximum usable frequency is termed the MUF. The best compromise frequency, as described above, is termed the FOT, or Frequency of Optimum Transmission. The FOT is considered to be approximately 80% of the MUF. In fact, deviation away from the FOT results in extra losses which significantly reduce system performance when communicating via sky wave. John Brune of the Army's NOE

Communications Branch at Ft. Monmouth, NJ, compiled data which shows that deviating +/- 1.5 MHZ from FOT in the early morning hours produces 20 dB "extra expected" loss. The mid-day period is only slightly more forgiving where a deviation of +/- 2 MHZ produces the extra 20 dB loss. A loss of 20 dB equates to one one-hundredth effectiveness. Mr. Brune points out correctly that for a successful sky wave communications link it is advisable to give more attention to choice of frequency rather than increase of transmitter power. [Ref. 5]

The elevation angle of the transmitted signal is another important factor in sky wave propagation. As shown in Figure 2, transmitted rays entering the ionized region at angles above the critical angle for that frequency are not bent enough to be returned to earth. Rays entering at angles below the critical angle are returned to earth at increasingly greater distances as the angle approaches the horizontal. It is clear that there is a certain distance along the earth's surface where little or no signal energy will be found. This area, called the skip zone, is too far away from the transmitter for effective ground wave coverage, and too close for sky wave coverage.

It seems at first glance that the skip zone would be easy to predict. The critical ray angle for a given

Figure 2 **Advanced Prophet Critical Ray Angle.**

frequency, however, is a complicated function of ionization density and layer height. The ionization of the atmosphere is believed to be caused by ultraviolet radiation from the sun. The degree of ionization of a layer is dependent upon time of day, season, and sun spot activity. [Refs. 3,4,6]

c. COMPUTER SIMULATION

Several computer programs are available to predict propagation via the ionosphere but Advanced Prophet, distributed by Naval Ocean Systems Center, is used herein. It is compatible with the Coast Guard Standard Terminal and provides all the required features necessary for this study.

The Advanced Prophet program was used in a scenario where a ground station at Norfolk, Virginia, was communicating with four helicopters engaged in typical Coast Guard missions. The range to helo 1 was 100 nautical miles (nm) and to helo 2 was 200 nm. Helo 3 was introduced only once to compare its horizontally polarized signal's ground wave range with that of the vertically polarized signal of helo 2. Helo 4 had the closest range at 50 nm. The helicopters were operated at 1000 feet above the ocean, the wind was programmed to be 25 knots, and the sun spot number was set at an average value of 50. The noise models were engaged and the

transmission mode was selected to be single side-band. The ground station used a vertically polarized antenna while the helos (except helo 3) were assumed to radiate isotropic signals. Summer and winter seasons were investigated as well as daytime and nighttime ionospheric conditions. The complete results of the simulation have been included in Appendix B, and certain figures from the study have been used to illustrate points in this section.

D. EFFECTIVE COMMUNICATION

The goal of effective communication from zero to 200 nm range is met by eliminating transmitting station's skip zone (Figure 3). This may be accomplished by increasing the area of ground wave coverage and by increasing the critical ray angle to bring the limit of sky wave coverage closer to the transmitter.

As illustrated in Figures 4 and 5 and explained in Reference 3, page 3-4, effective ground wave propagation over the ocean beyond 10 nm range is made possible by use of vertically polarized signals. An efficient Coast Guard helicopter's antenna system should produce a high gain, uniformly distributed, vertically polarized radiation pattern in the horizontal plane. Figure 4 shows that frequency selection is also very important in

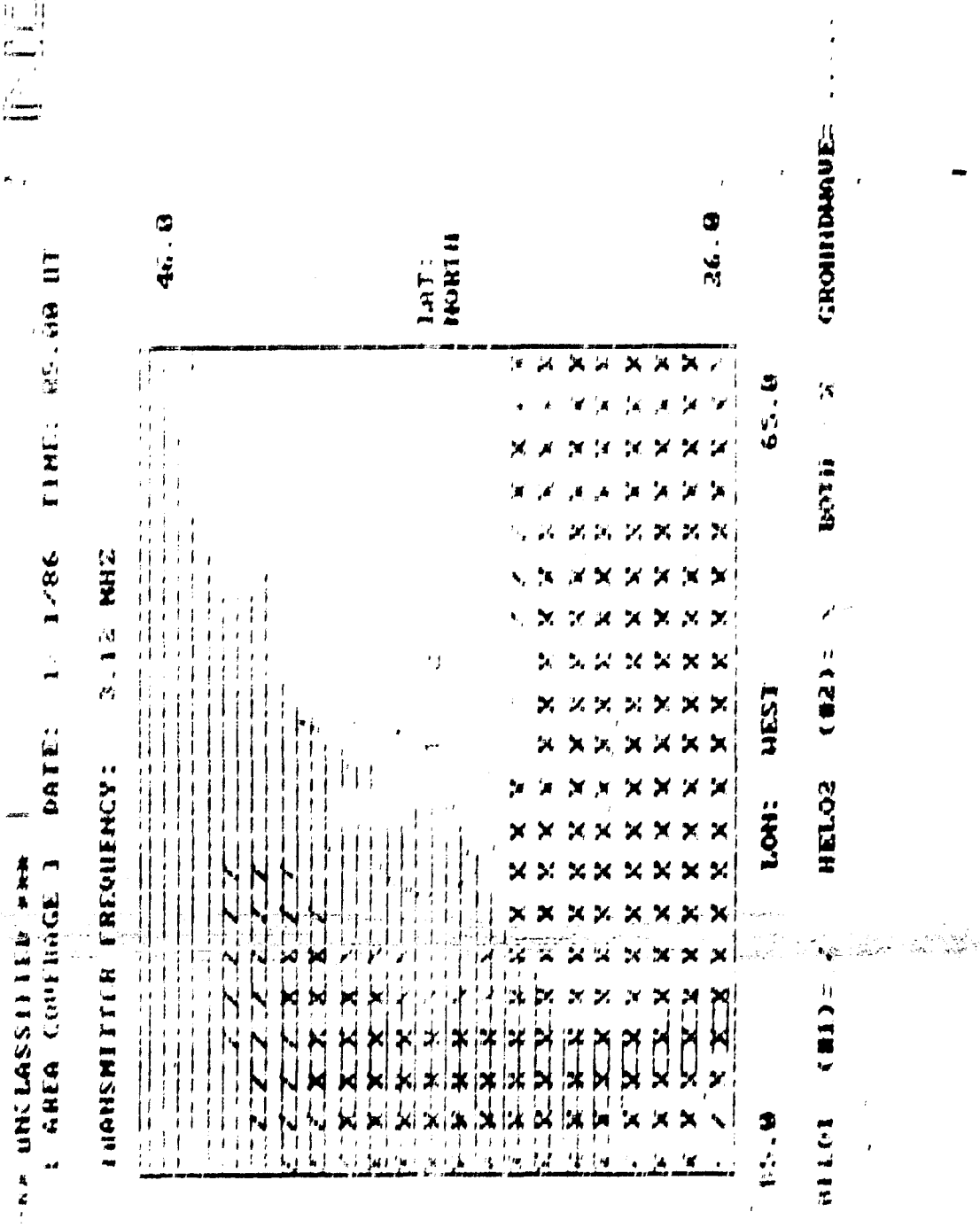

Figure 3 Advanced Prophet Area Coverage.

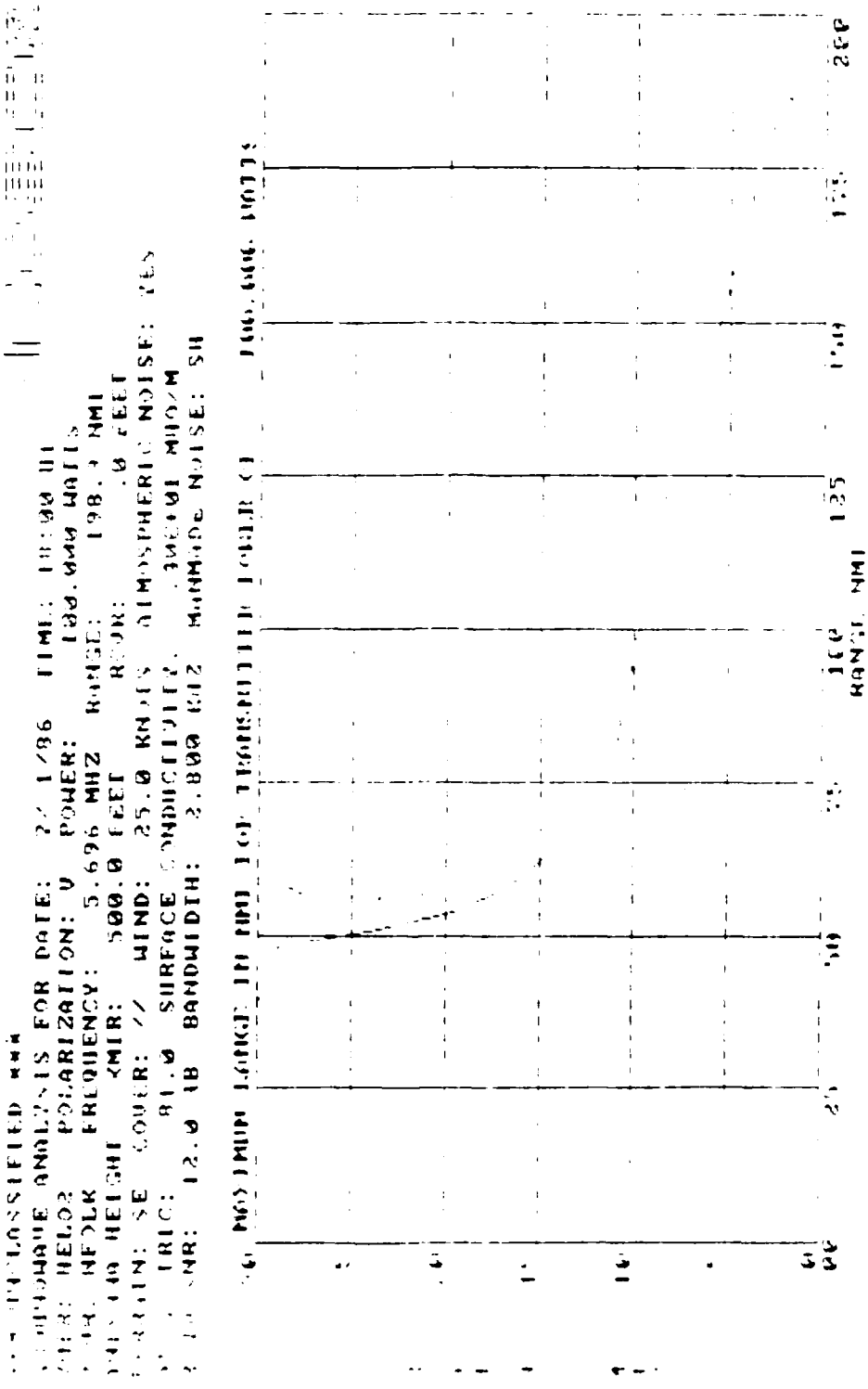

Figure 4 Ground Wave Range vs. Frequency, Vertically Polarized Signal.

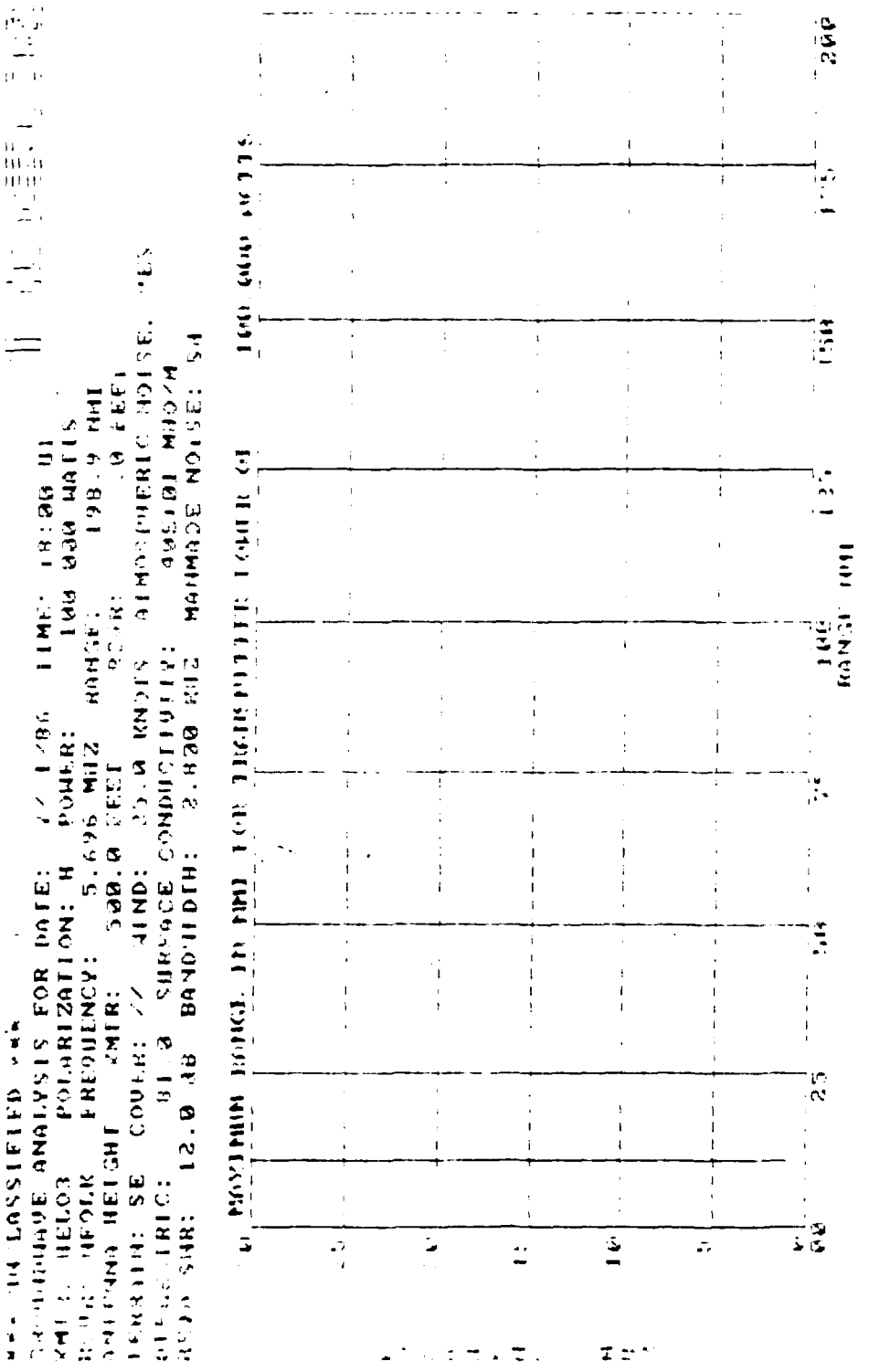

Figure 5 Ground Wave Range vs. Frequency, Horizontally Polarized Signal.

maximizing ground wave propagation. In general, lower frequencies yield greater ground wave coverage.

Increasing the critical ray angle is done by proper frequency selection. Since optimum frequency is tied to a dynamic ionosphere, propagation programs such as Advanced Prophet are essential tools.

The Advanced Prophet scenario illustrated that helo 4, at 50 nm, essentially always communicated via ground wave. Helos 1 and 2 would generally utilize sky wave propagation and the frequency "windows" for effective communication were seen to be from about 3 to 9 MHZ depending on time of day and other solar conditions. Their ray angles as determined by the Prophet program ranged from 45 to 76 degrees with an average angle of about 64 degrees above the horizon.

Signals which are transmitted at large elevation angles are said to be propagating in the Near Vertical Incidence Skywave mode (NVIS). The average of 64 degrees may be taken as the optimum launch angle for 100 to 200 nm one hop NVIS propagation. With this average figure in mind an antenna system can be designed to produce maximum gain and a uniformly distributed radiation pattern at the optimum elevation angle. Polarization of the vertically radiated signal is not important since the effects of reflection from the ionosphere tend to produce random

polarization in sky wave signals [Refs. 6, 7]. Consequently, only the total radiation pattern is of concern for sky wave propagation.

III. MODELING

A. NUMERICAL ELECTROMAGNETICS CODE (NEC)

The Numerical Electromagnetics Code (NEC) is a FORTRAN computer program which is used to analyze the electromagnetic response of metal structures. Antennas, wires, masts, surfaces, or virtually any other metal structure may be modeled and analyzed using NEC. Structures may be modeled in free space or over a ground plane. While it is possible to push the code beyond its limits careful modeling and analysis with NEC provides accurate results from 2 MHZ through 25 GHZ [Ref. 8, 9]. NEC requires a main-frame computer, but a smaller micro-computer based version of the code called MININEC is also available.

The code performs a numerical solution of integral equations for currents induced on the structure using a form of Method of Moments for "point matching" at each wire segment center. Kirchoff's Current Law is enforced on segments at wire junctions to reduce the linear equations to a manageable number which are then solved by the Gauss-Doolittle method.

Once the current on each segment is known, the radiation patterns are obtained by numerical integration

of the RF current distribution on the model. Output is in tabular form, easily accessible for processing with graphical routines.

Excellent detailed descriptions of the NEC code are found in References 8, 10 and 11.

B. INTERACTIVE GRAPHICS UTILITY FOR AUTOMATED NEC ANALYSIS (IGUANA)

NEC requires input geometry cards for each wire in the model. Every card must include the coordinates in three-space of both end points as well as the wire radius and segmentation. Developing this type of model accurately is a lengthy, tedious, and error prone process. The data must be checked and re-checked to ensure measurement and keyboard errors are not present in the model. IGUANA is a user-friendly micro-computer based program which provides a partially automated system for both data entry and display. Its use greatly reduces the time and effort required for accurate model development.

Data entry begins by using a digitizer to enter lines from a two-view scale drawing. The program converts this data into a three-dimensional wire model and displays the entire structure graphically. The program has the capability of rotating the displayed structure and of magnifying selected portions (zooming). The user can

edit the displayed structure via mouse, adding or removing wires and points as desired. When the model is completed the program will generate the required geometry data cards in NEC format. Utilities which include optional prompts are available within IGUANA to create or edit the NEC comment, geometry, or program control cards. [Ref. 12]

C. DOLPHIN MODEL

The Coast Guard's SRR helicopter, the HH-65A Dolphin, was modeled as an equivalent grid of wires. The use of wire grid models for complex bodies has been well documented [Ref. 8, 13]. Some concern existed for this case, however, because of the high level of composite materials in the make-up of this aircraft. The vertical fin was almost all carbon fiber composite material, while the tail cone panels consisted of an inner and outer metal skin with a nomex honeycomb material sandwiched between them. The individual panels were electrically insulated from one another for corrosion prevention purposes (Figure 6). Except for the vertical tail, fins, and horizontal stabilizer, the wire model was constructed as though this was a standard metal helicopter in the belief that, at RF, the framework would have appeared solid. The vertical tail, fins, and horizontal

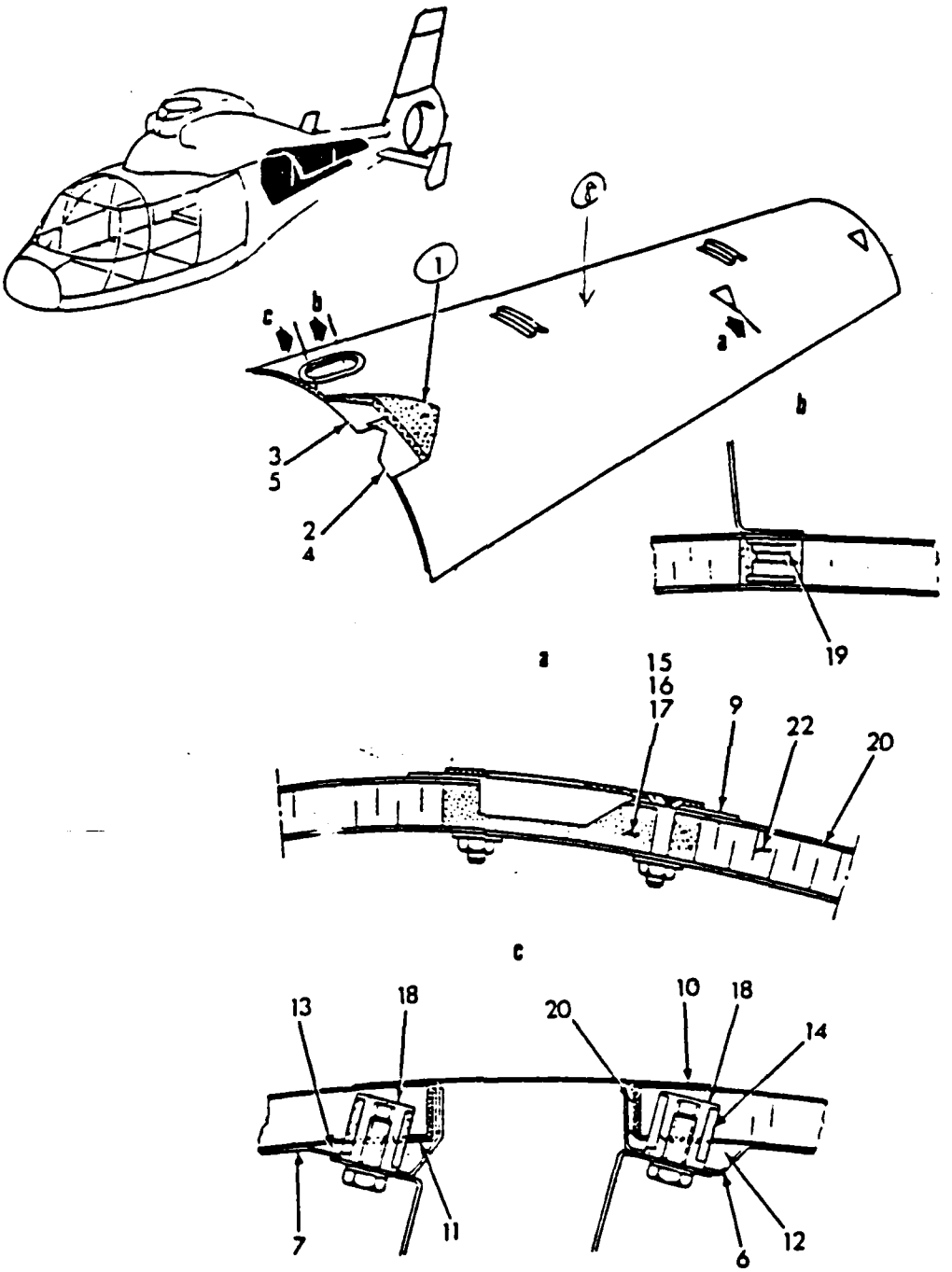

Figure 6 Dolphin Skin Panels.

stabilizer were modeled with a coarser wire grid because of their highly composite makeup.

A simple wire antenna model was developed to simulate each of four HF antenna systems contemplated for use on the Dolphin. These were:

1. The original long-wire antenna (Fig. 7,8)
2. The Collins 437R-2 tuned monopole antenna (Fig. 9,10)
3. The tube or transmission line antenna (Fig. 11,12)
4. The long shunted loop antenna (Fig. 13,14)

Restrictions on segment lengths and wire radii in terms of wave length (frequency) were delineated in Reference 11. The frequencies investigated varied from 3 to 18 MHZ, so a convenient wire radius seemed to be one inch (.0254m), while nominal segment length was .5 meters. Prior experience indicated that segments near the excitation point needed to be kept as small as possible for an accurate model of the feed region [Ref. 8], and so, consistent with the restrictions of Reference 11, the segment lengths on the antenna models were minimized.

D. SEA HAWK MODEL

The initial geometry data cards for the HH-60J Sea Hawk, the Coast Guard's MRR helicopter, were obtained from ESL, a division of TRW. Since this Sea Hawk model was developed without the benefit of the IGUANA program

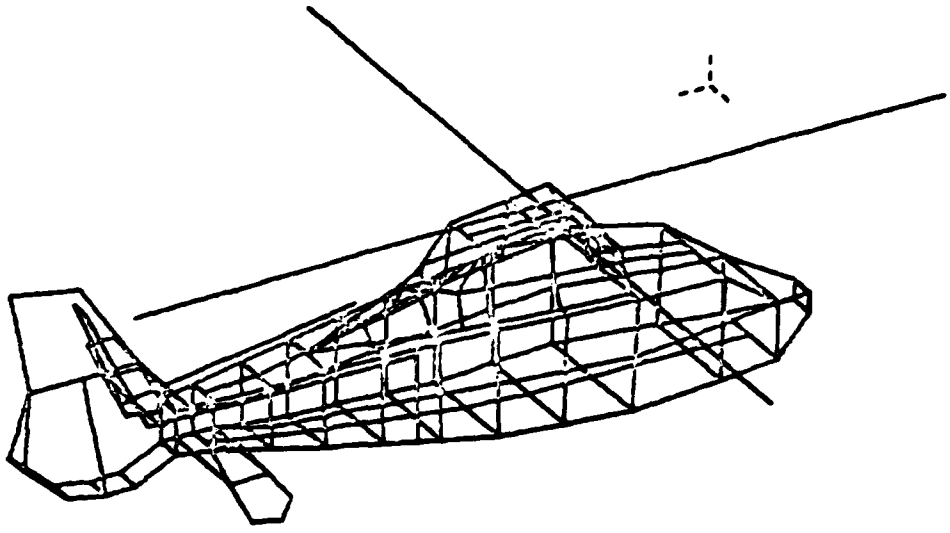

Figure 7 Dolphin Model with Long-wire.

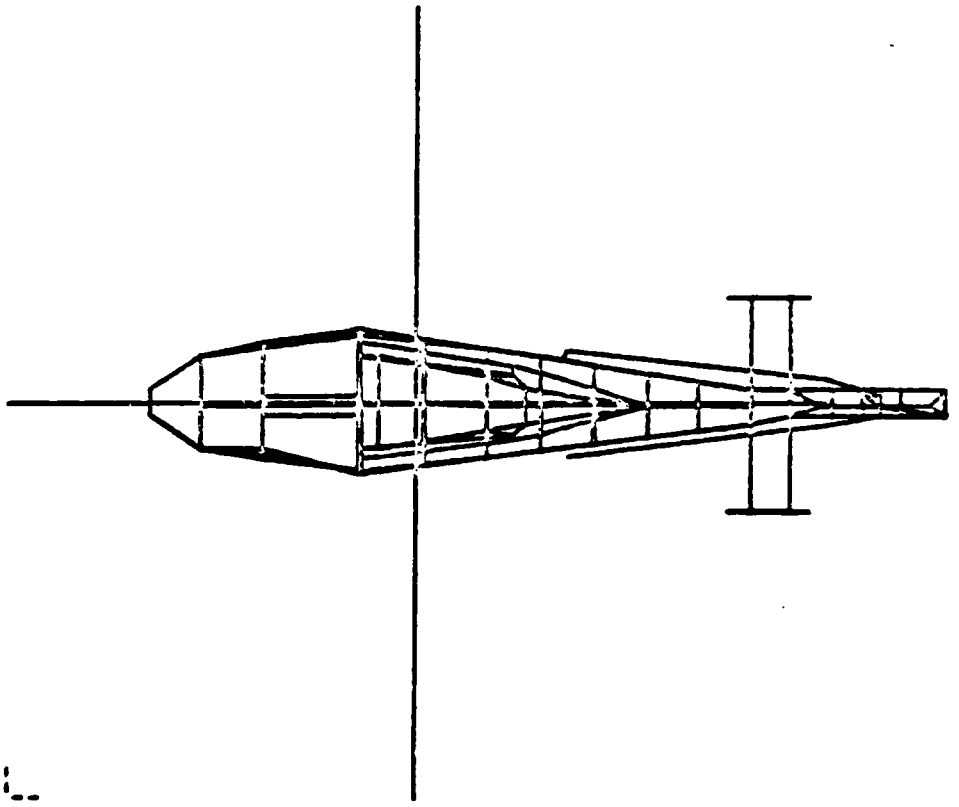

Figure 8 Dolphin Model with Long-wire, Top View.

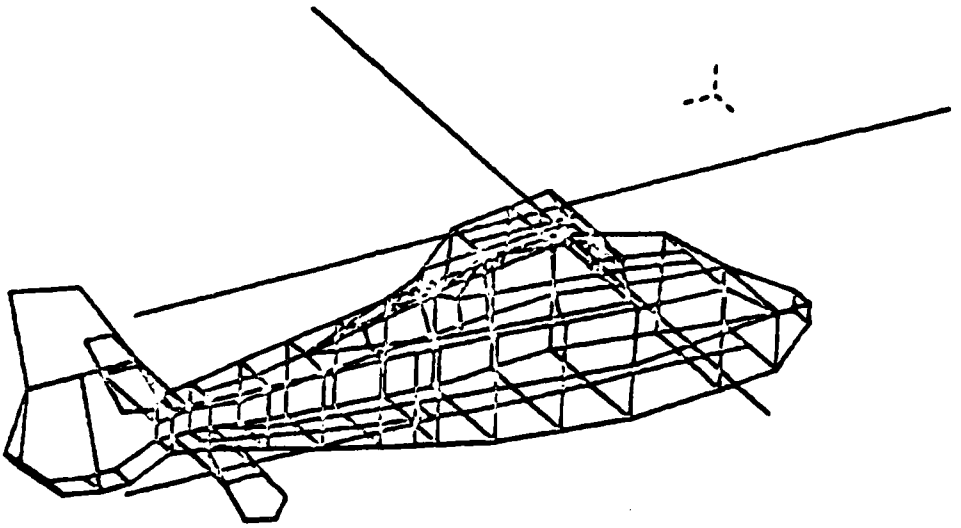

Figure 9 Dolphin Model with Tuned Monopole.

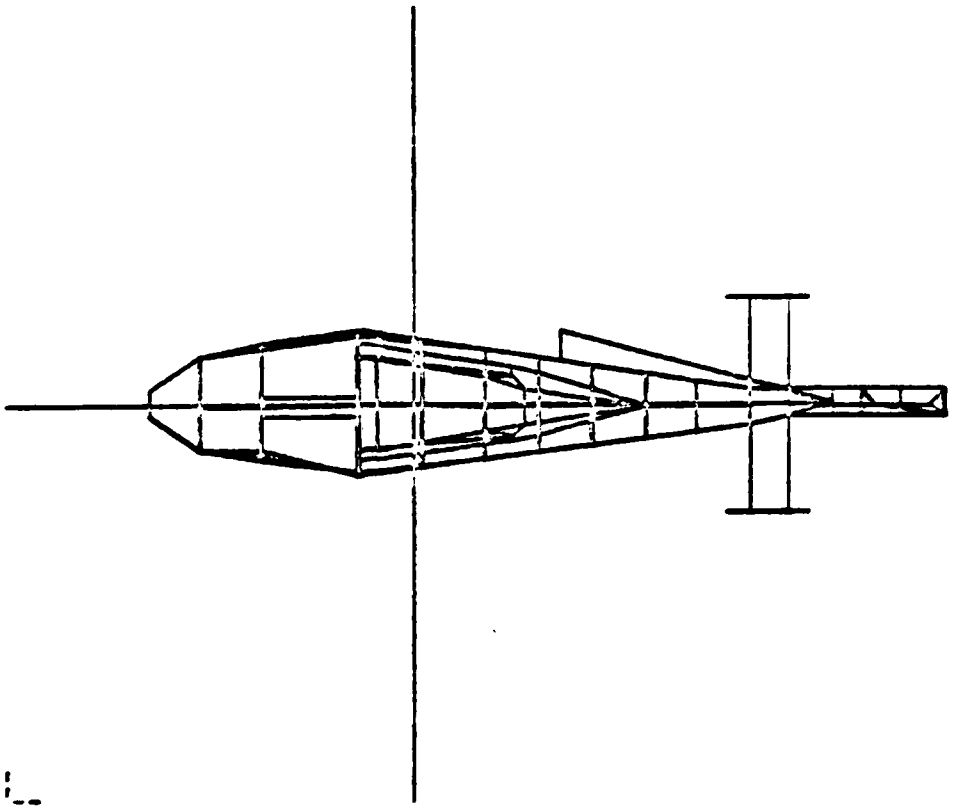

Figure 10 Dolphin Model with Tuned Monopole, Top View.

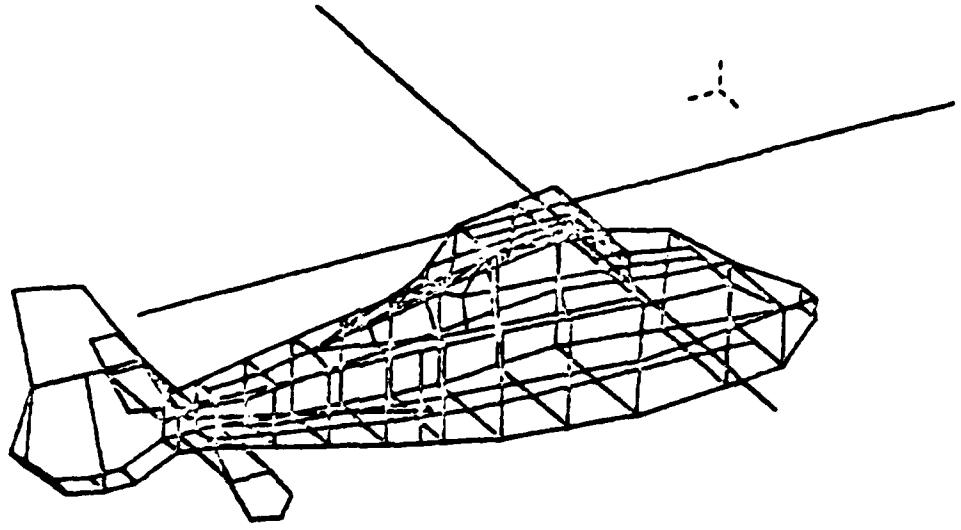

Figure 11 Dolphin Model with Transmission Line.

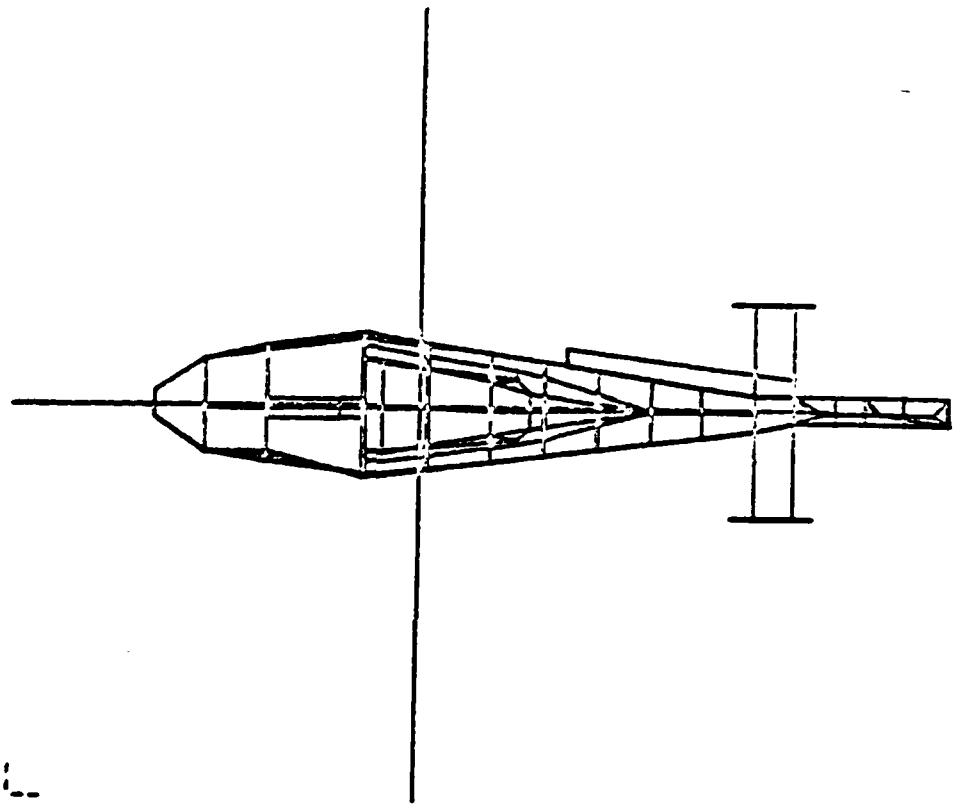

Figure 12 Dolphin Model with Transmission Line, Top View.

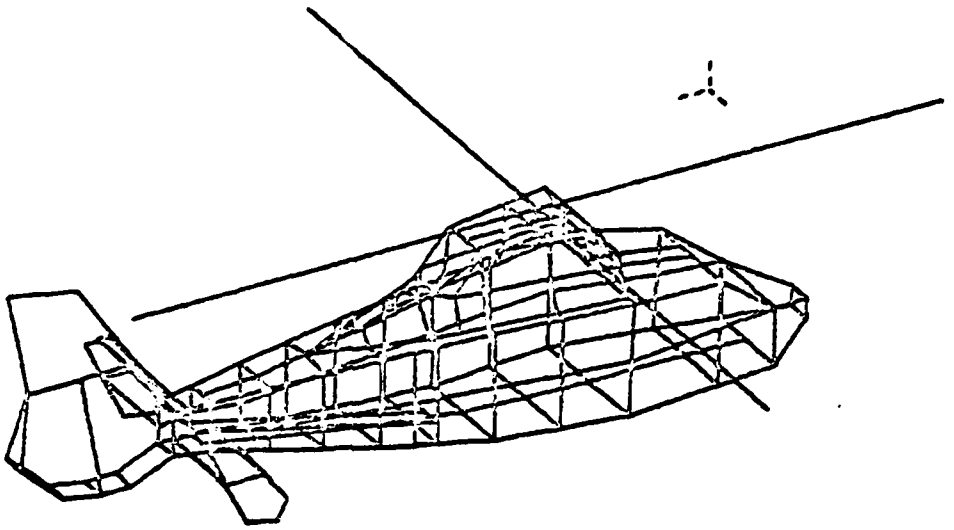

Figure 13 Dolphin Model with Long Shunted Loop.

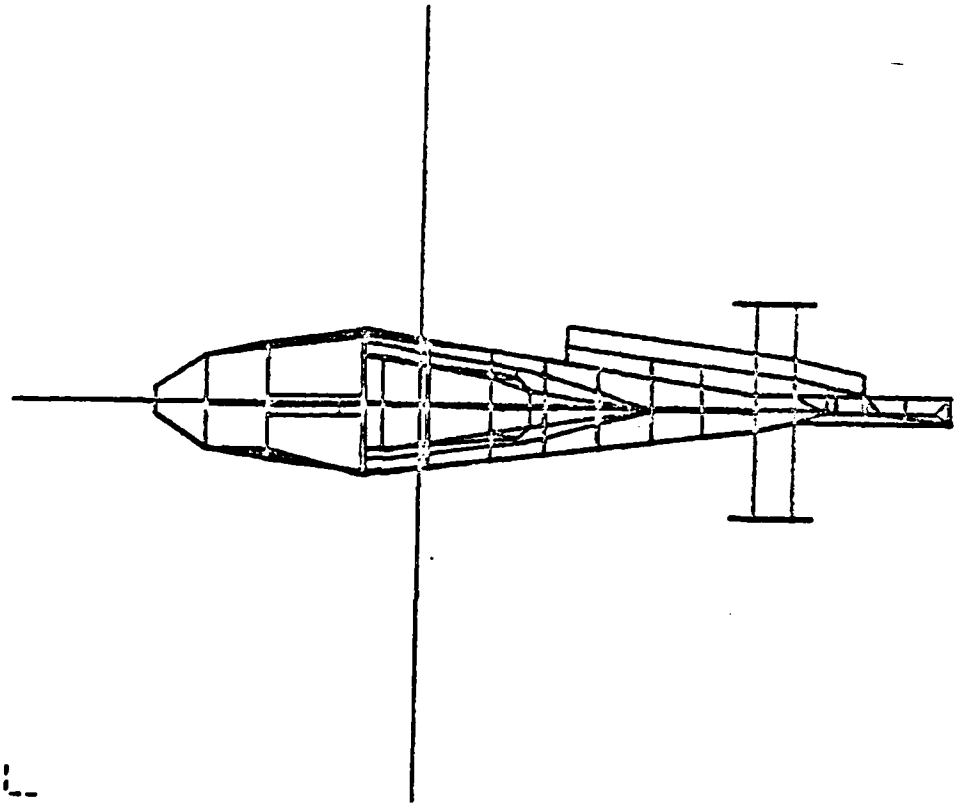

Figure 14 Dolphin Model with Long Shunted Loop, Top View.

it tended to be a bit less complex than the Dolphin model. The data cards were input into IGUANA and the geometry was modified to include a horizontal stabilizer and a more dense vertical tail.

Similarly, wire models were developed for each of the Sea Hawk's HF antennas. They were:

1. The original long-wire configuration (Fig. 15,16)
2. Navy placement of the Collins 437R-2 (Fig. 17,18)
3. CG placement of the Collins 437R-2 (Fig. 19,20)
4. The tube or transmission line antenna (Fig. 21,22)

When the Sea Hawk model was run at frequencies below 13 MHZ with the original long-wire antenna model attached the code was unable to model the currents accurately. Negative input impedance and negative radiated power were observed. Initially, it was thought that shortening the segments on the helicopter body to more closely match the antenna segment length would help, but this correction proved ineffective. Large wire radius jumps at junctions have been known to cause the same problem [Refs. 8, 14], but all wires in this model were equal in radius. Finally it was noted by G. J. Burke that the NEC code has some limitations in modeling electrically small antennas in the vicinity of loops [Ref. 15]. In this case the loops were formed by the wire grid making up the helicopter body. The loop currents at low frequencies

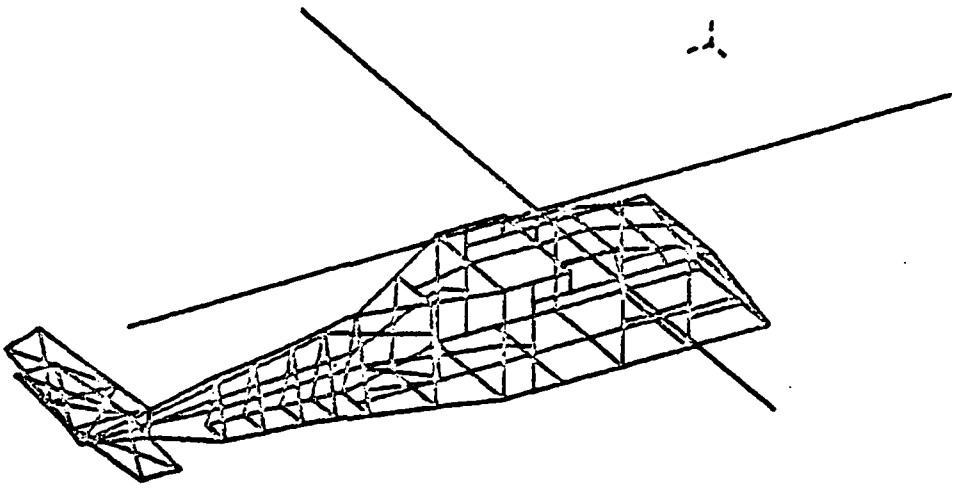

Figure 15 Sea Hawk Model with Long-wire.

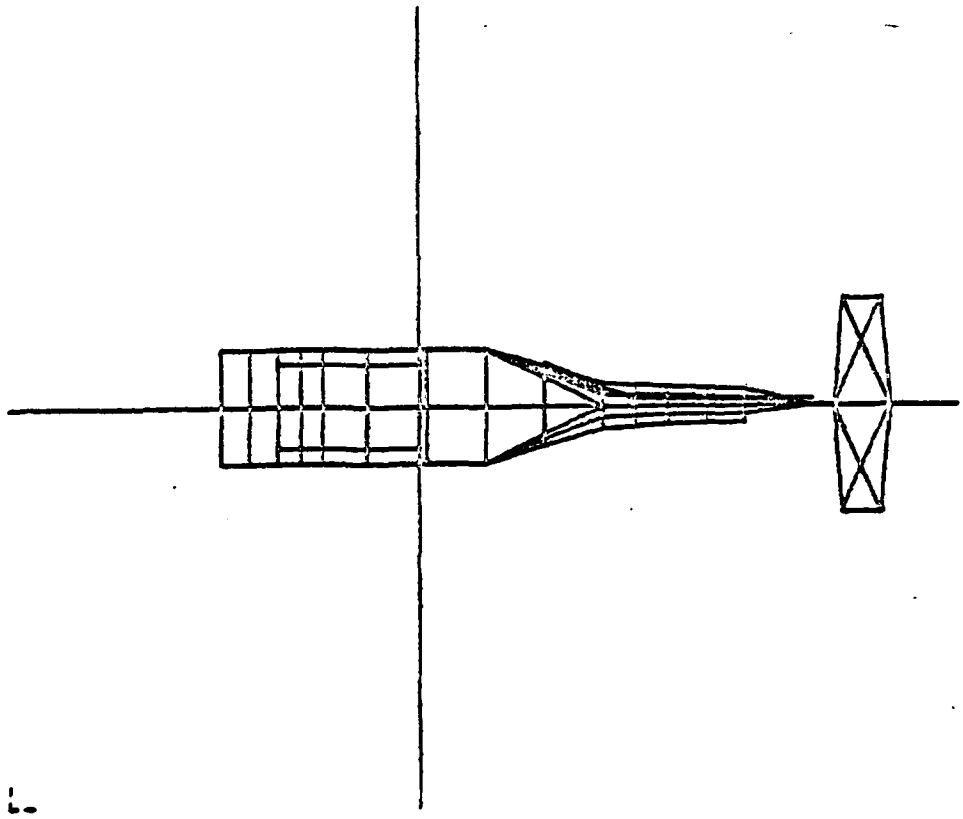

Figure 16 Sea Hawk Model with Long-wire, Top View.

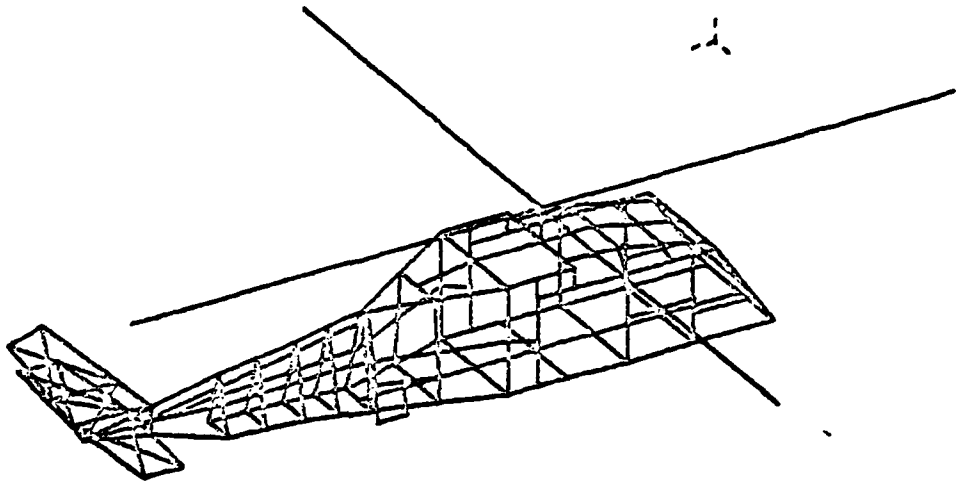

Figure 17 Sea Hawk Model with Navy Tuned Monopole.

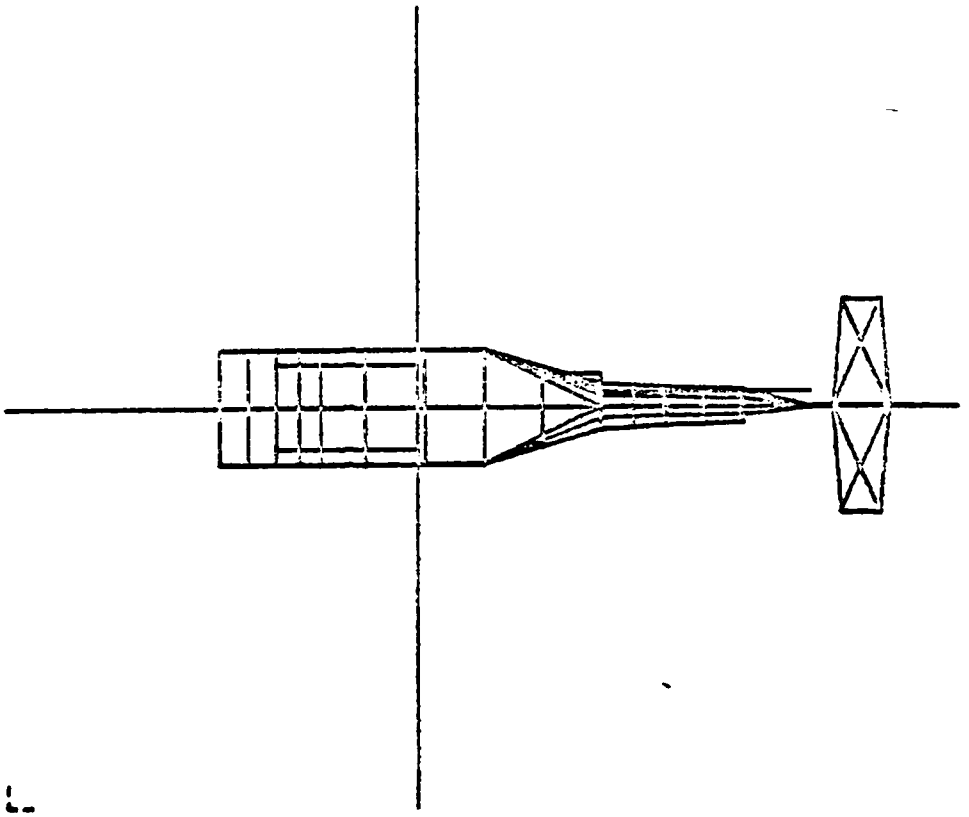

Figure 18 Sea Hawk Model with Navy Tuned Monopole, Top View.

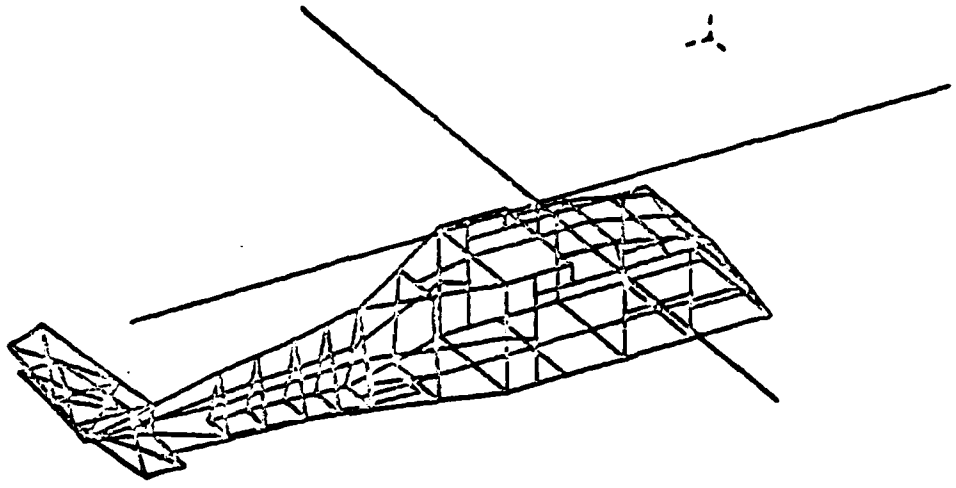

Figure 19 Sea Hawk Model with CG Tuned Monopole.

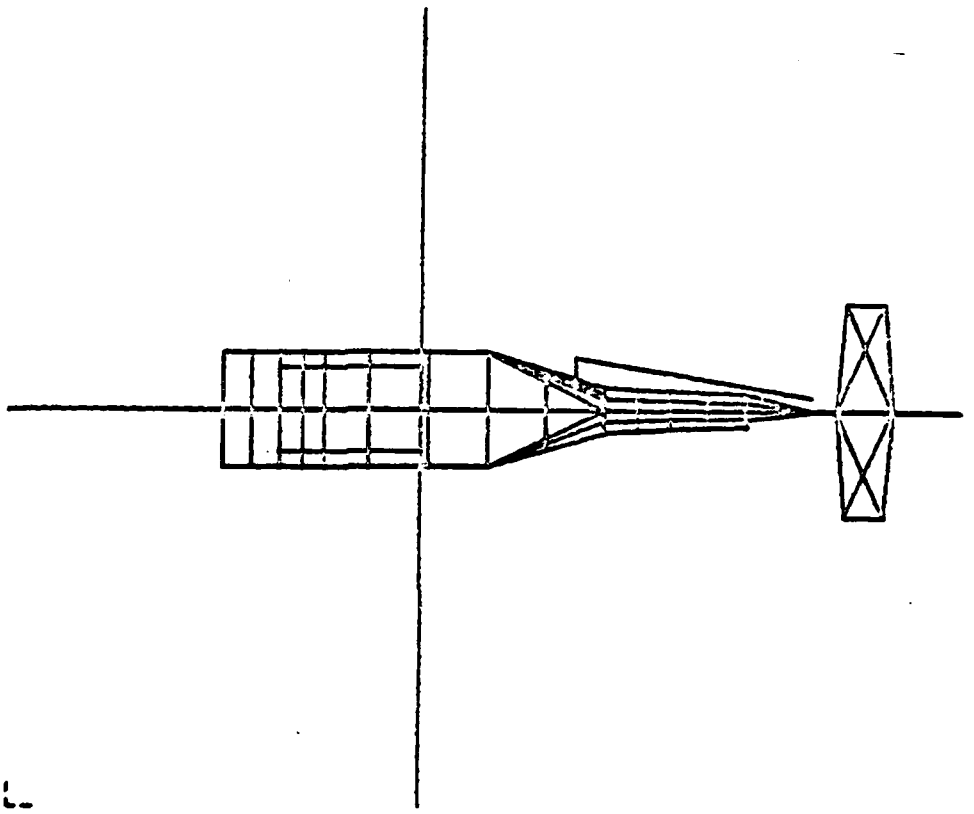

Figure 20 Sea Hawk Model with CG Tuned Monopole, Top View.

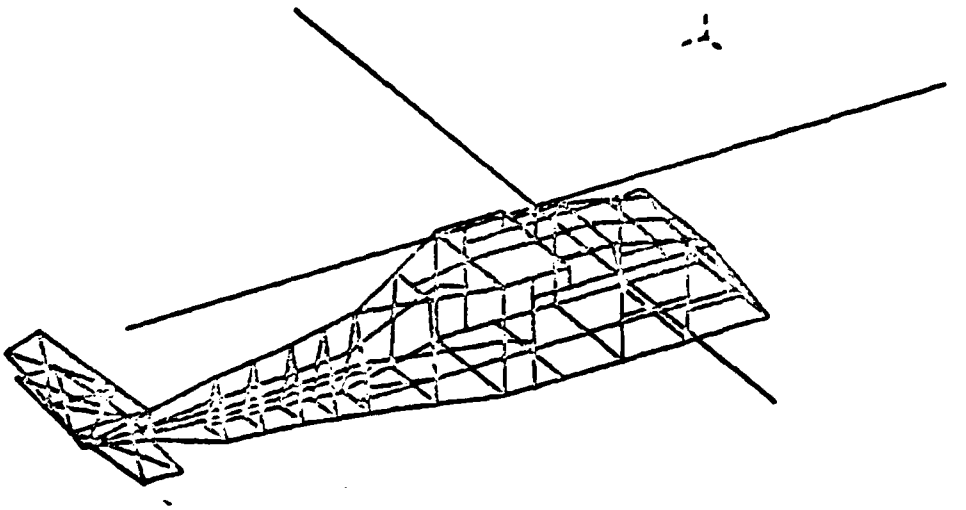

Figure 21 Sea Hawk Model with Transmission Line.

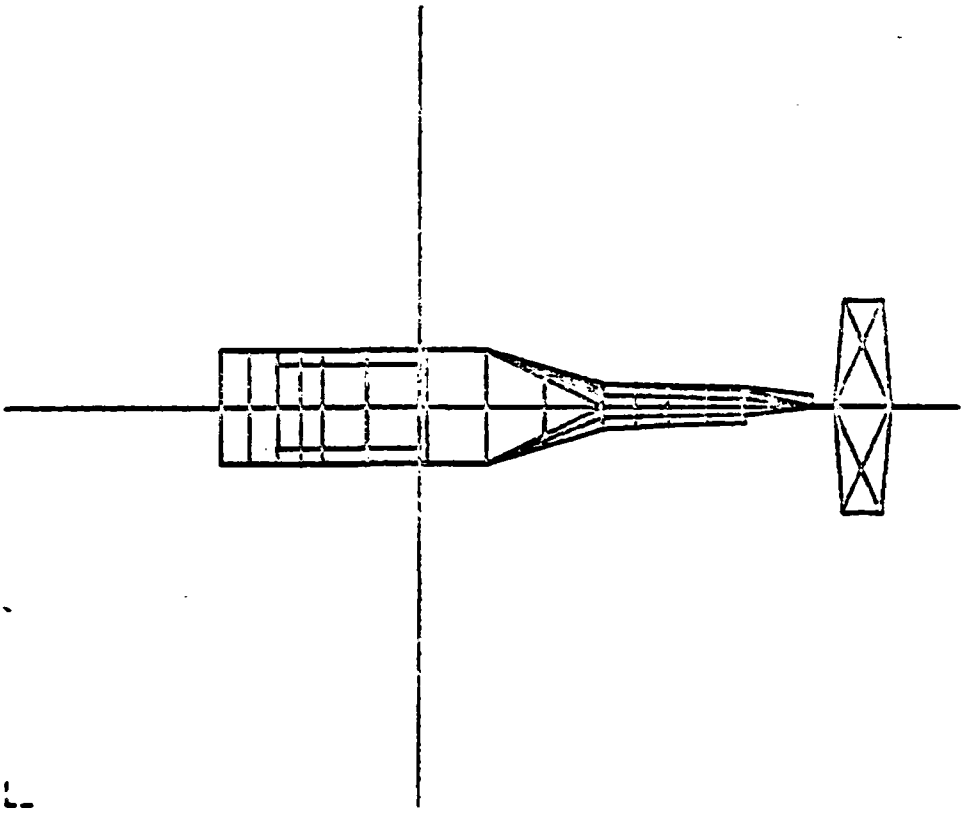

Figure 22 Sea Hawk Model with Transmission Line, Top View.

became proportional to 1/f while the antenna current was proportional to f which was clearly wrong. The interaction matrix for the loops became ill-conditioned at the lower frequencies. Mr. Burke observed that this problem could be minimized by spacing the antenna further from the loops. Indeed, by moving the antenna out from 6 inches to 18 inches from the aircraft skin the code provided accurate results. [Ref. 15]

E. NEC RUNS

The NEC code computes the currents resulting from an applied excitation. The RF current distribution must meet the boundary condition that axial components of electric fields must go to zero along each wire. The excitation used in this study takes the form of an applied voltage at the antenna feed point which becomes a non-zero source field at the short segment of wire across the feed point with a zero excitation elsewhere on the structure. The currents are computed by NEC as described earlier, and finally radiation patterns are tabulated.

Individual NEC runs were made for each helicopter model at Coast Guard air-to-ground frequencies of 3.123, 5.696, and 8.984 MHZ as well as at Naval Air Test Center frequencies of 4.040, 7.645, 13.974, and 18.100 MHZ. For

each run the matrix for the helicopter itself was calculated as a Numerical Green's Function (NGF) partitioned matrix solution and recalled for use with the various antenna models. This procedure allowed multiple radiation patterns to be collected for each antenna configuration at a specified frequency with one run in a fraction of the CPU time otherwise required. Even so, each run required 30 to 45 minutes of CPU time (IBM 370/3033). It was discovered that the NGF was too large to be stored on the users own disk, and that spooling the file to and from the reader (main frame storage) cost more money than the calculation of the NGF itself. Consequently, the NGF was re-calculated for each run.

Each model was validated using the code's average gain calculation. This was a performance criteria based on volumetric pattern integration and has been known to be an excellent self-validation tool [Ref. 13]. Correlation of the NEC horizontal plane radiation patterns with actual antenna test range data was also performed.

IV. RESULTS

A. GENERAL

NEC free space radiation patterns were obtained for each helicopter/antenna configuration at frequencies of 3.123, 4.040, 5.696, 7.645, 8.984, 13.974, and 18.1 MHZ. Four cuts were taken for each configuration at each frequency:

1. Horizontal plane, theta = 90 degrees
2. Elevation 64 degrees above horizontal, theta = 26 degrees
3. Vertical plane, nose to tail, phi = 0 degrees
4. Vertical plane, offset, phi = 45 degrees

Vertically and horizontally polarized gains as well as total gain were plotted relative to isotropic signal levels in decibels (dBI). Patterns at frequencies above 10 MHZ were included solely to compare the NEC output with test range data since NVIS propagation required use of the lower end of the HF spectrum (2 to 10 MHZ). Vertical plane plots were included only as a matter of interest. Sample radiation pattern plots have been shown in Figures 23 through 26.

Comparison of horizontal plane radiation patterns with antenna test range data revealed satisfactory correlation for the horizontally polarized gains. The

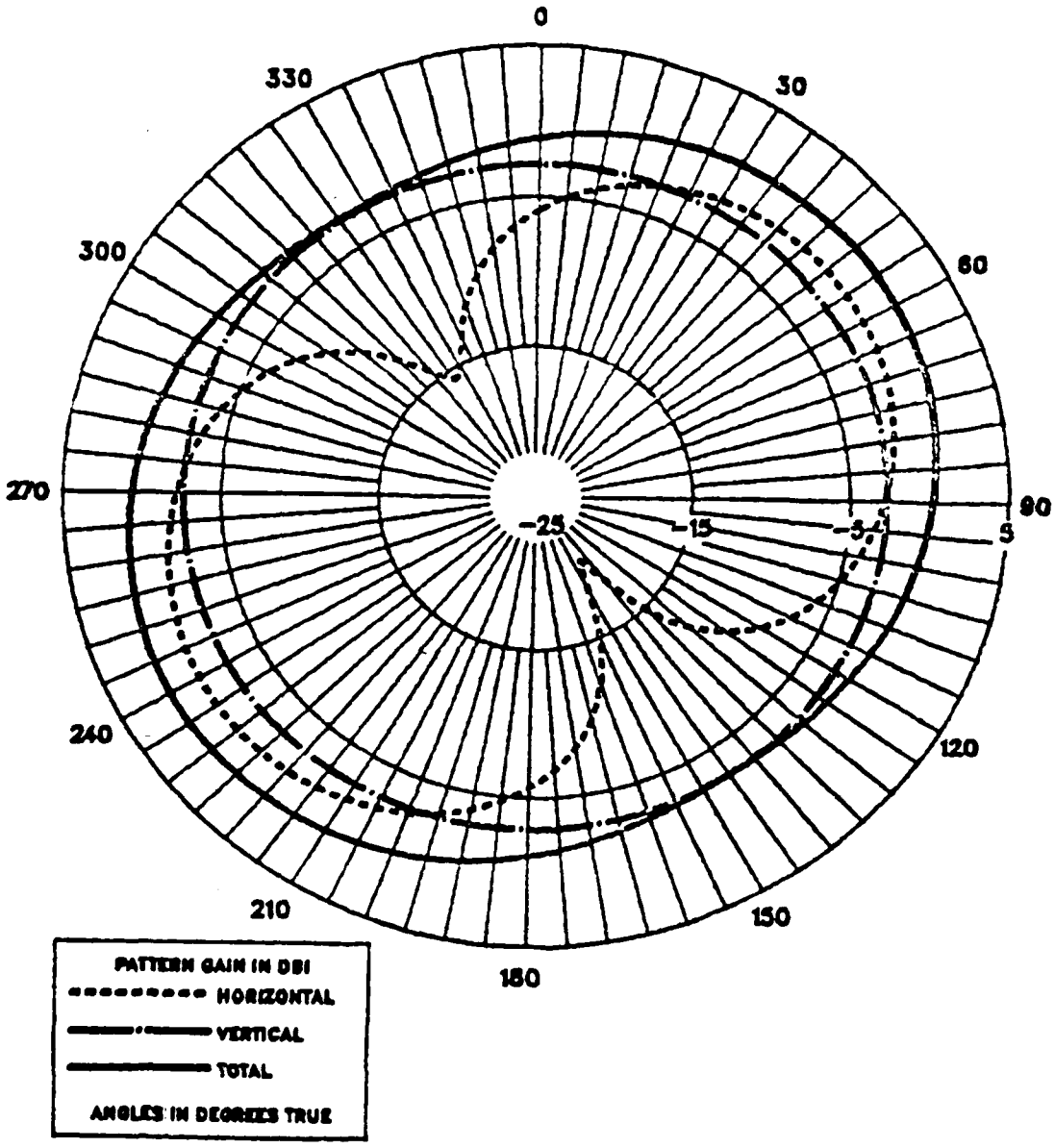

Figure 23 Radiation Pattern, Horizontal Plane, Theta = 90.

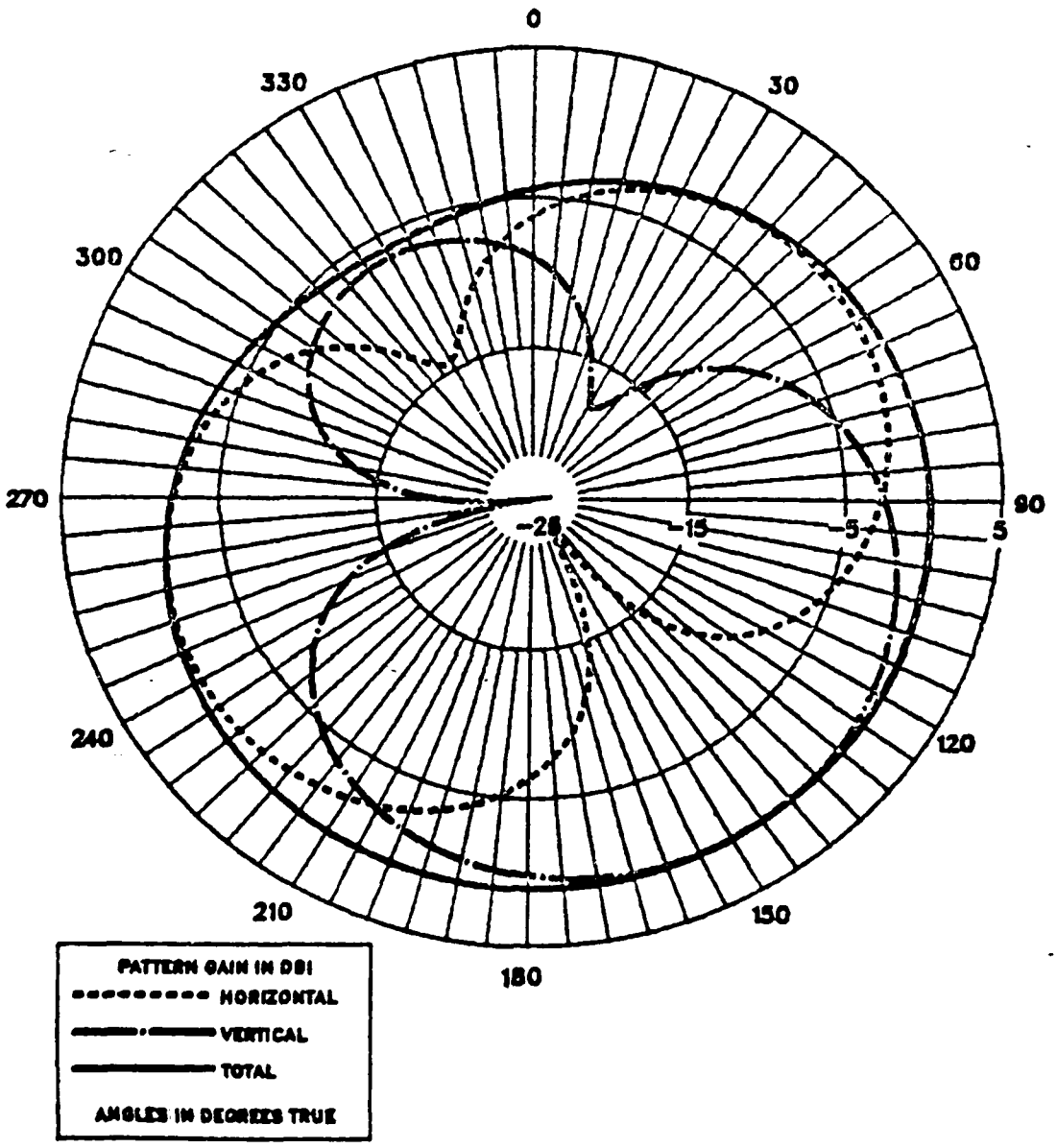

Figure 24 Radiation Pattern, Elevated Plane, Theta = 26.

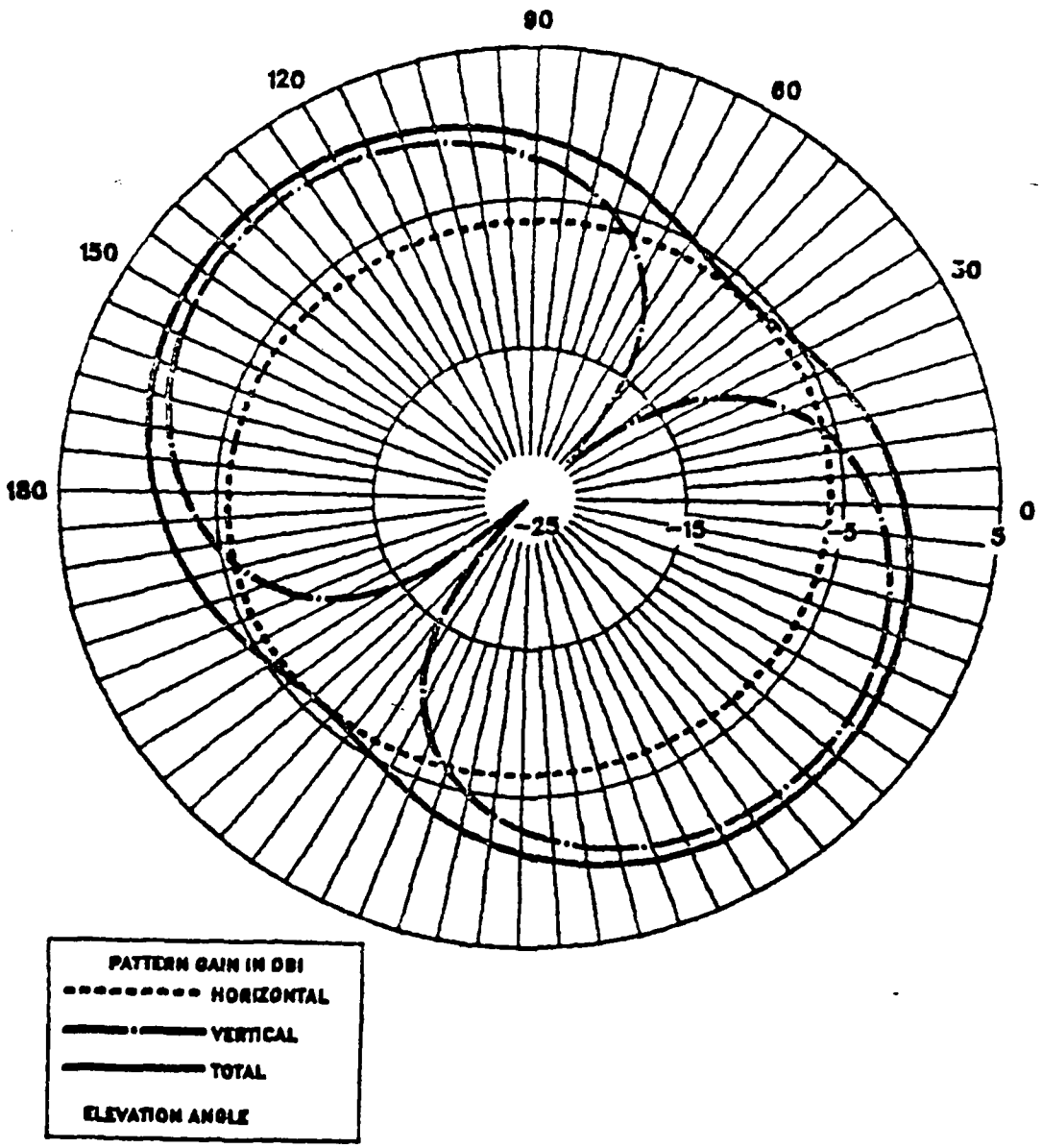

Figure 25 Radiation Pattern, Vertical Plane, Phi = 0.

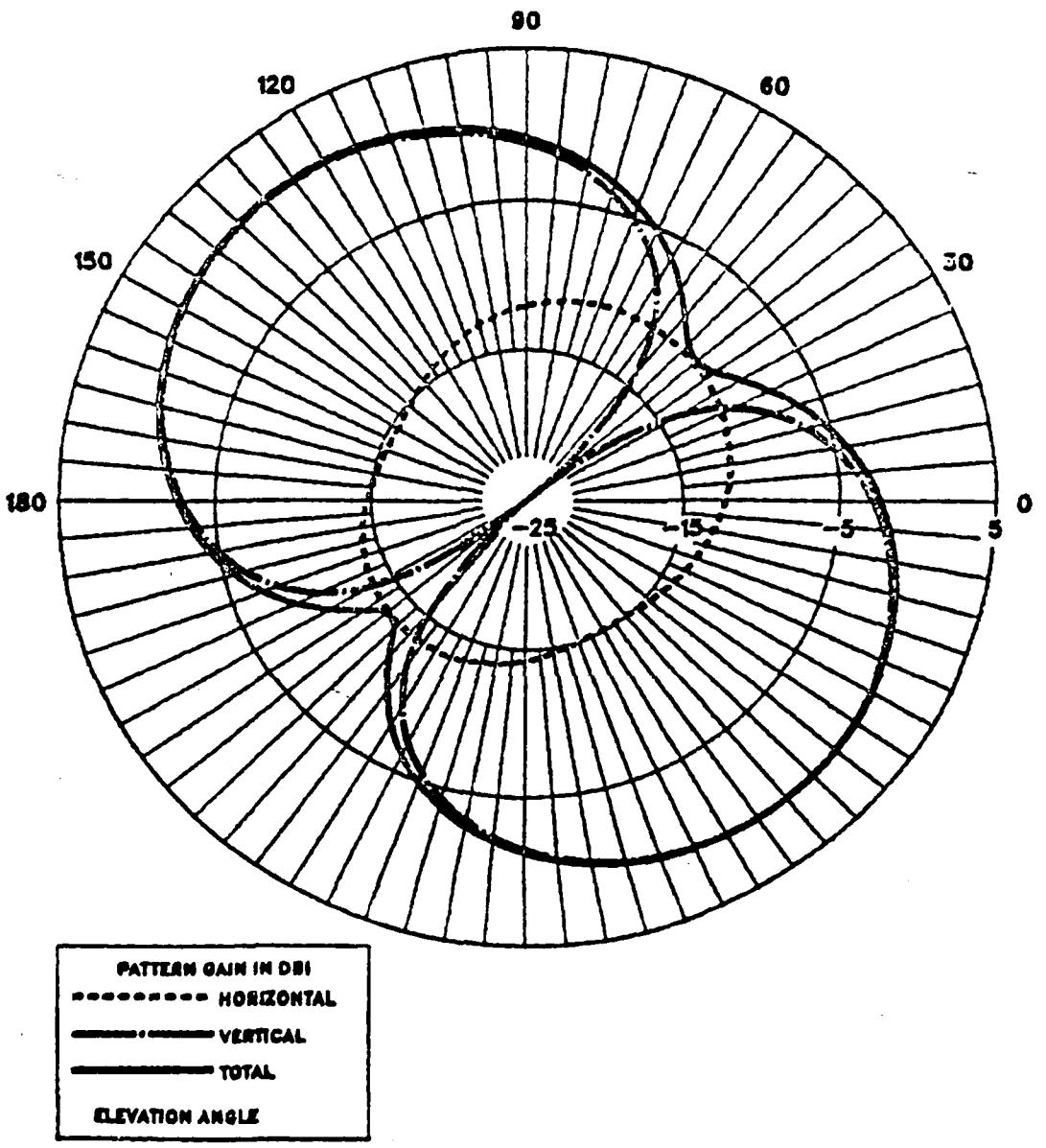

Figure 26 Radiation Pattern, Offset Vertical Plane, Phi = 45.

NEC generated vertically polarized gain patterns were much stronger than the test range data. This was believed to be because the test range data was not corrected for the surface wave contribution [Refs. 1, 2, 16]. The shape of the NEC generated vertically polarized gain patterns corresponded well with test range data, as did the relative improvement or decrement in gain from long-wire to Navy tuned monopole antenna patterns. These positive correlations validated the model results insofar as relative comparisons of antenna systems were concerned.

B. DOLPHIN

As discussed earlier, enhanced ground wave coverage is achieved by maximizing the vertically polarized signals in the horizontal (azimuthal) plane. Horizontal plane cuts showed both loop antennas produced low vertically polarized gains (-10 to -15 dBI) and were quite directional. The long-wire antenna produced better vertically polarized gain (-5 to -10 dBI) but was still directional. The tuned monopole produced good vertically polarized gain (about -2 to -3 dBI) and was truly omni-directional at all frequencies.

Performance in the NVIS mode was judged by total gain in the elevated cut. All four antennas performed well (virtually isotropic) with omni-directional

characteristics for each except that the tuned monopole exhibited slight directionality.

C. SEA HAWK

A problem was discovered with the long-wire antenna model on the Sea Hawk at 5.696 MHZ. An apparent model resonance was encountered causing gains to be significantly inflated while pattern shapes appeared to be correct. Model resonance has been encountered in the past [Ref. 8], but with different manifestations. This problem was not encountered at the adjacent test frequencies of 4.040 and 7.645 MHZ, nor was it encountered with any other antenna configuration at any frequency. The long-wire configuration at 5.696 MHZ was, therefore, not reflected in the following discussion.

As in the Dolphin results, the vertically polarized gain in the horizontal plane cut of the loop antenna was always low and was directional at all but one frequency. The long-wire and Navy tuned monopole installations had vertically polarized gains that typically peaked between -5 and 0 dBI but were highly directional. The tuned monopole installed as on the Dolphin produced a gain of -5 dBI but was truly omni-directional at all frequencies.

In the NVIS mode the total gains were found to be virtually at isotropic levels and omni-directional for all antenna configurations except that the Navy tuned

monopole installation appeared to produce about +6 dBI total gain.

V. CONCLUSIONS AND RECOMMENDATIONS

A. DOLPHIN

This study proves that the Collins 437R-2 HF Tuned Monopole antenna is the correct replacement for the Dolphin's troubled long-wire installation. Placement seems to be adequate, but further study and modeling could be performed to determine whether this location is truly optimum.

B. SEA HAWK

Based on the candidate antennas addressed in this study, an installation of the Collins 437R-2 tuned monopole antenna on the Sea Hawk in a configuration similar to that on the Dolphin is the best course of action to enhance HF performance on that aircraft. Further study to determine optimum antenna location would be useful. Especially important is "model tuning" as described in Ref. 7 to determine long-wire performance at the Coast Guard's primary air-to-ground frequency of 5.696 MHZ.

C. ADDITIONAL STUDIES

The modeling done in this study assumes that the transmitter and coupler aboard the helicopter can be

matched effectively with the candidate antennas at the frequencies tested. Follow-on studies could investigate the input impedance of these antenna installations and assess the degree of compatibility with existing matching networks.

Another interesting aspect to be studied is the possible "Rusty Bolt Effect." The possibility exists that the method used to "electrically isolate" pieces of the airframe, or the composite core itself, being in the vicinity of the HF antenna, may cause undesired semiconducting effects at junctions and interfaces. The resulting intermodulation products can seriously degrade the performance of a variety of avionics. [Ref. 17]

Although currently being studied by another university, a study and analysis of the antenna test range measurement methods at the Naval Air Test Facility, NAS Patuxent River, Maryland, could provide good thesis material for a student interested in applying antenna theory to a "real life" situation.

E. SUMMARY

Accurate electromagnetic models were created via the IGUANA program for the Dolphin and Sea Hawk helicopters as well as for long-wire, tuned monopole, and shunted-loop transmission-line-type antennas. The criteria for judging HF system effectiveness was devised from results

of the Advanced Prophet program. The models were used as input for the NEC program and the resulting radiation patterns were analyzed to select the optimum antenna configuration which met mission needs for each aircraft.

If the procedures and techniques for HF system modeling presented herein are utilized much time and money can be saved when designing or reconfiguring HF systems for optimum performance.

LIST OF REFERENCES

1. Butt, P., Hartenstein, R., DeCarlo, D., "Navy Evaluation of the Rockwell-Collins 437R-2 Tuned HF Monopole and Short-wire Antenna Installed on the SH-60B Lamps MK III Helicopter," Report RW-41R-83, Naval Air Test Center, January 27, 1984.

2. Butt, P., Hartenstein, R., DeCarlo, D., "HF Antenna Re-evaluation Contributory Report," File Number 13230, Naval Air Test Center, August 17, 1987.

3. Brune, John F., Reilly, Joseph E., "Compact HF Antenna (With Propagation Studies)," Report ECOM-4366, U.S. Army Electronics Command, November 1975.

4. LaBahn, R.W., "Operational Users Manual for Advanced Prophet on MS-DOS Based Microcomputer Systems," Technical Document 848, Naval Ocean Systems Center, August 1985.

5. Brune, John F., "Near Vertical Incident Skywave Propagation," U.S. Army Electronics Command, unpublished, undated.

6. Hall, Gerald L., The ARRL Antenna Book, The American Radio Relay League, Inc., 1984.

7. Chatterjee, B., Propagation of Radio Waves, Asia Publishing House, New York, 1963.

8. Kubina, Stanley K., "Numerical Modelling Methods for Predicting Antenna Performance on Aircraft," AGAARD Lecture Series 131, 1983.

9. McMahon, Andy, "Complex Input Impedance of a Monopole Over a Ground Plane," Oral Presentation, Applied Computational Electromagnetics Conference, March 1987.

10. Thomson, David Duerr, Electromagnetic Near-Field Computations for a Broadcast Monopole Using Numerical Electromagnetics Code (NEC), Master's Thesis, Naval Postgraduate School, Monterey, CA, September 1983.

11. Burke, G.J., Poggio, A.J., Numerical Electromagnetics Code (NEC) - Moment of Methods, Technical Document 116, Naval Ocean Systems Center, January 1981.

12. "User's Guide for the Interactive Graphics Utility for Automated NEC Analysis," Prepared for Naval Ocean Systems Command by System Development Corp., Version 4.0, September 30, 1986.

13. Miller, E.K., "Numerical Modeling Techniques for Antennas," AGAARD Lecture Series 131, 1983.

14. Trueman, C.W., Kubina, S.J., "AM Re-Radiation Project -- Final Report 1982-3," Technical Note EMC-83-04, EMC Laboratory, Concordia University, Montreal, Canada, August 1983.

15. Burke, G.J., "Enhancements and Limitations of the Code NEC for Modeling Electrically Small Antennas," Report UCID-20970, Lawrence Livermore National Laboratory, January 1987.

16. Telephone Conversation Between LCDR J.B. Crawford, Naval Postgraduate School, and Dennis DeCarlo, Naval Air Test Center, July 15, 1987.

17. Landt, J.A. "Effects of Nonlinear Loads on Antennas and Scatterers," AGAARD Lecture Series 131, 1983.

APPENDIX A
NEC RADIATION PATTERN PLOTS

H65 IGUANA DATA RUN AT 3.123MHZ ON 8/19/87

LONG-WIRE ANT, FREE SPACE, HORIZ CUT, THETA=90

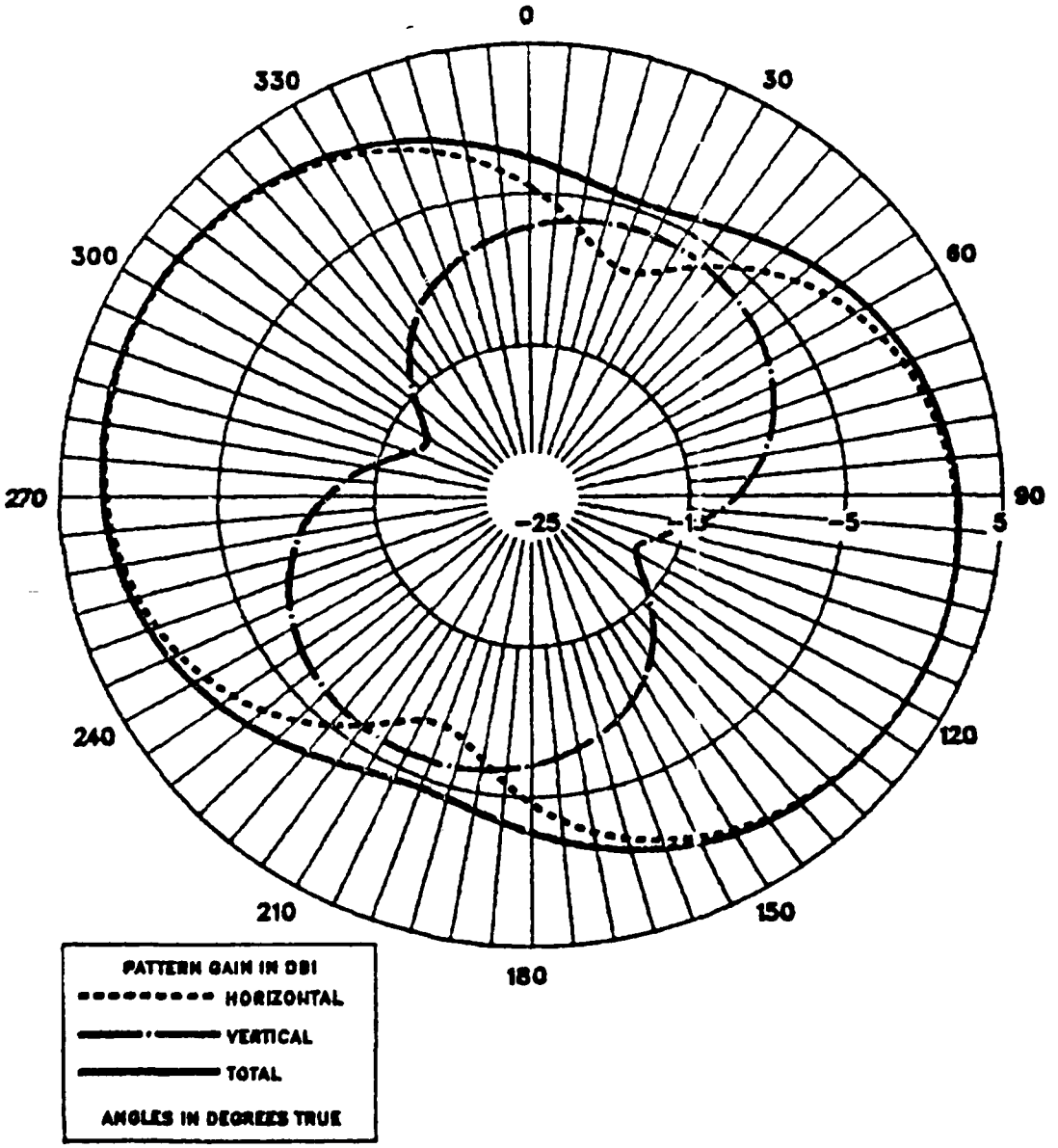

H65 IGUANA DATA RUN AT 3.123MHZ ON 8/19/87

LONG-WIRE ANT, FREE SPACE, HORIZ CUT, THETA=26

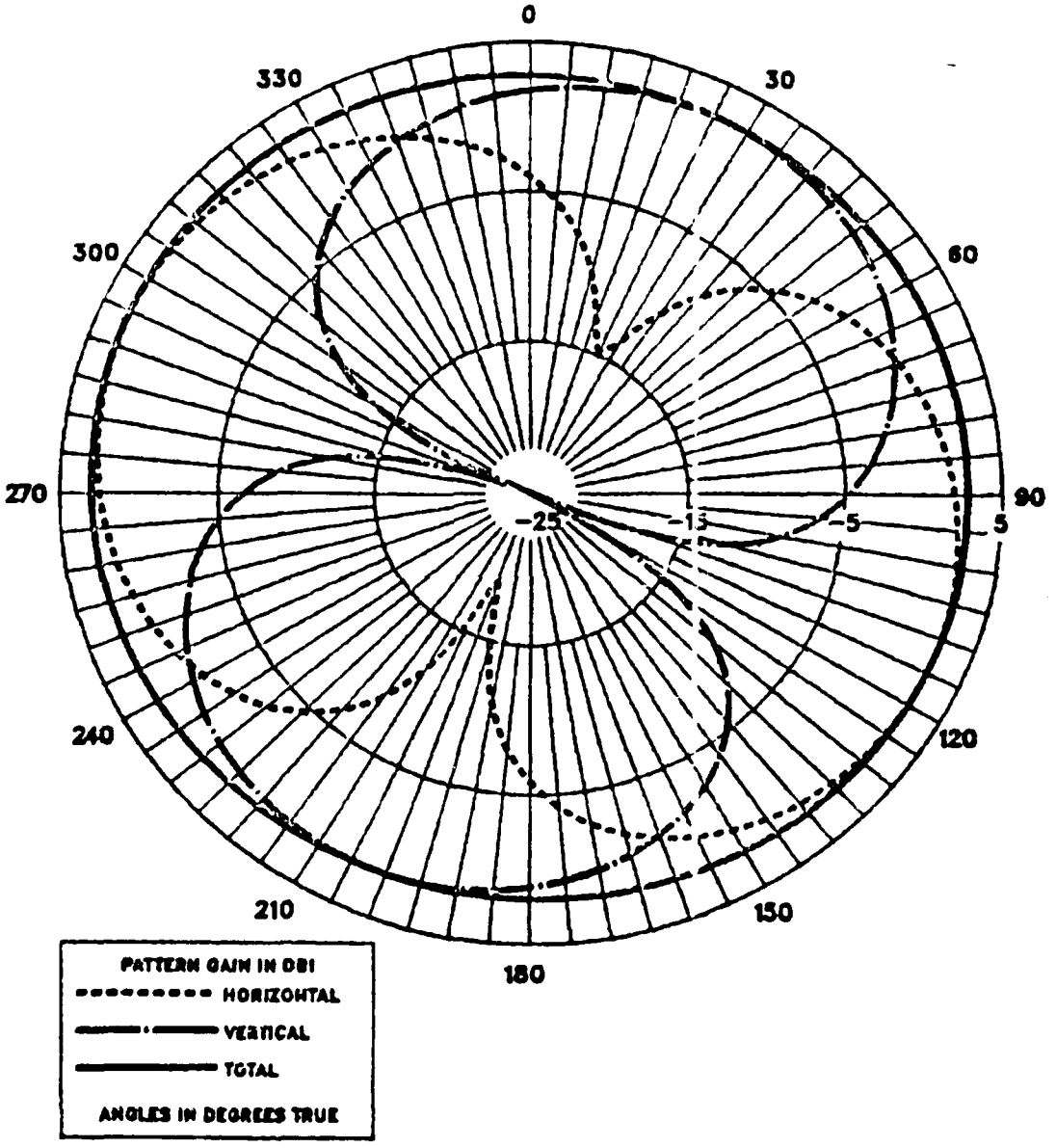

H65 IGUANA DATA RUN AT 3.123MHZ ON 8/19/87

LONG-WIRE ANT, FREE SPACE, VERT CUT, PHI=0

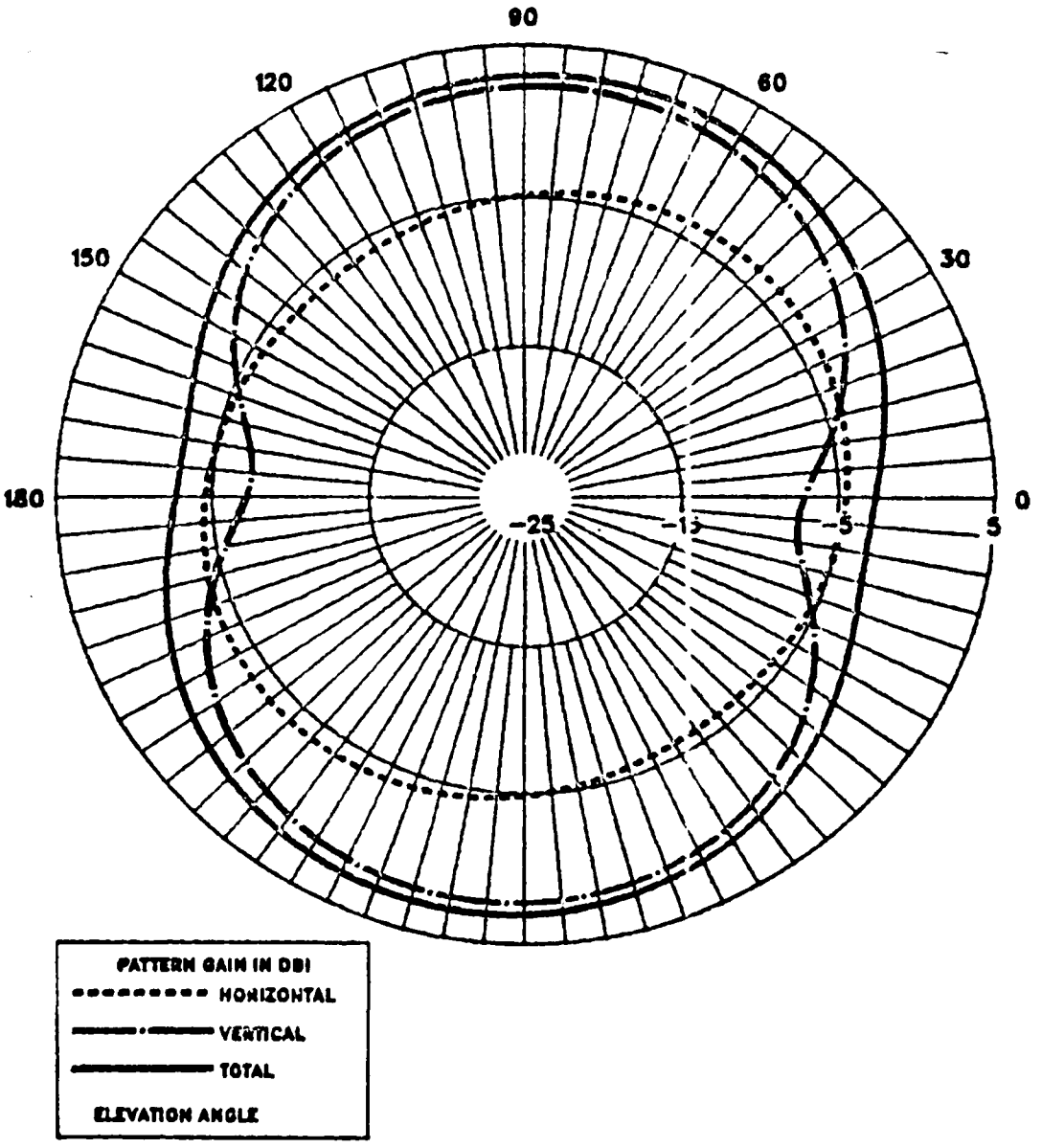

H65 IGUANA DATA RUN AT 3.123MHZ ON 8/19/87

LONG-WIRE ANT, FREE SPACE, VERT CUT, PHI=45

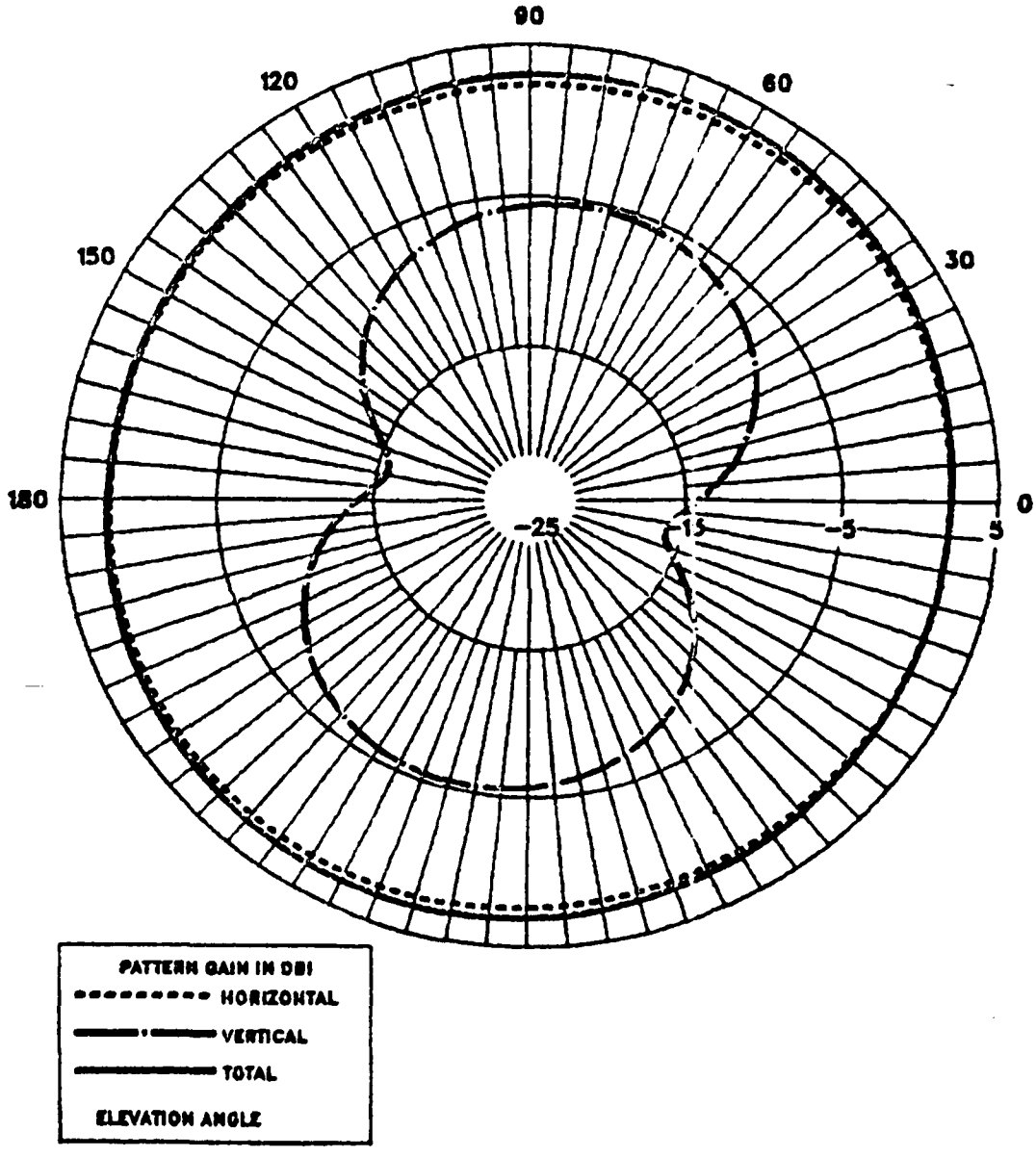

H65 IGUANA DATA RUN AT 3.123MHZ ON 8/19/87

COLLINS 437R-2 ANT, FREE SPACE, HORIZ CUT, THETA=90

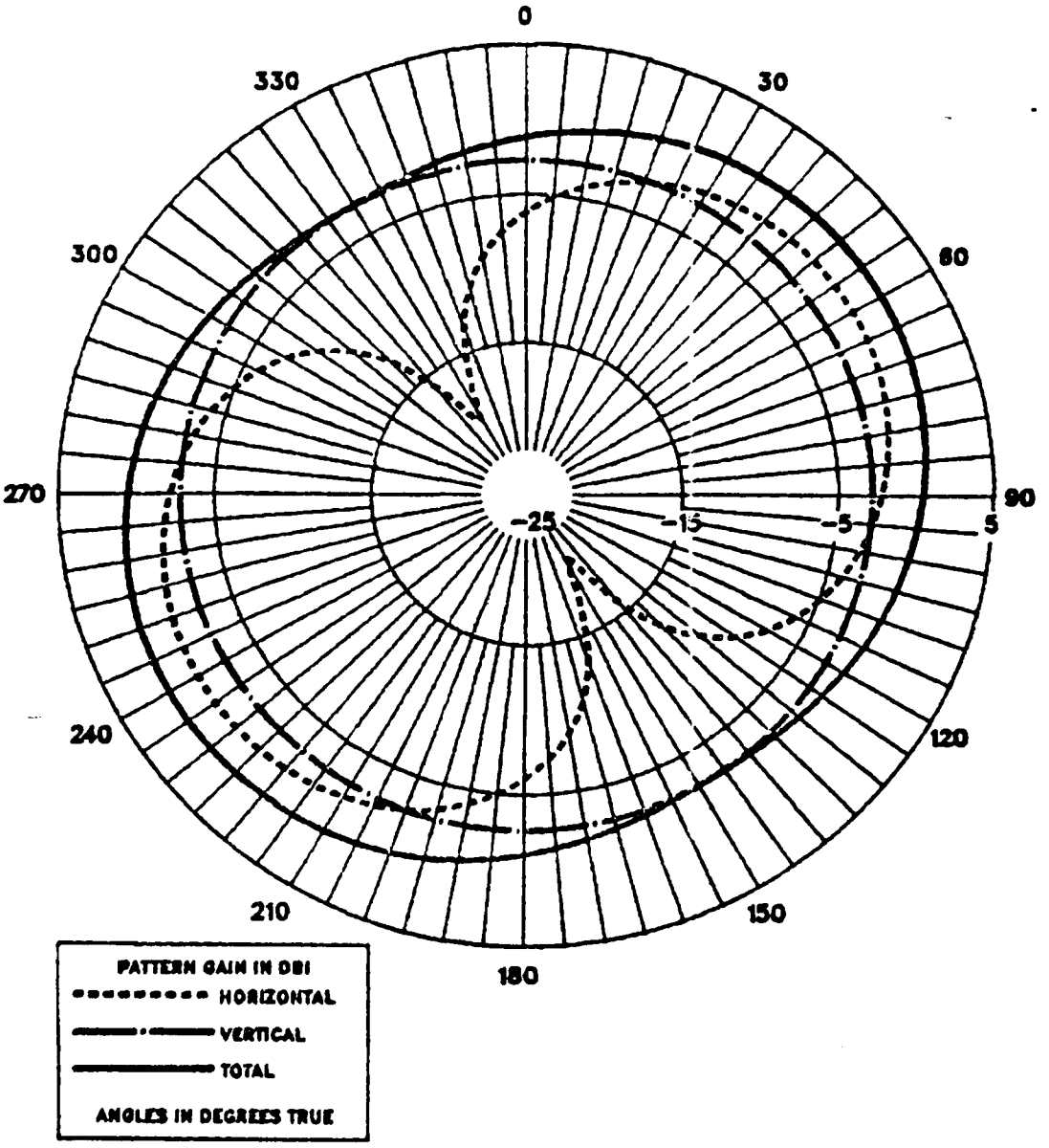

H65 iGUANA DATA RUN AT 3.123MHZ ON 8/19/87

COLLINS 437R-2 ANT, FREE SPACE, HORIZ CUT, THETA=26

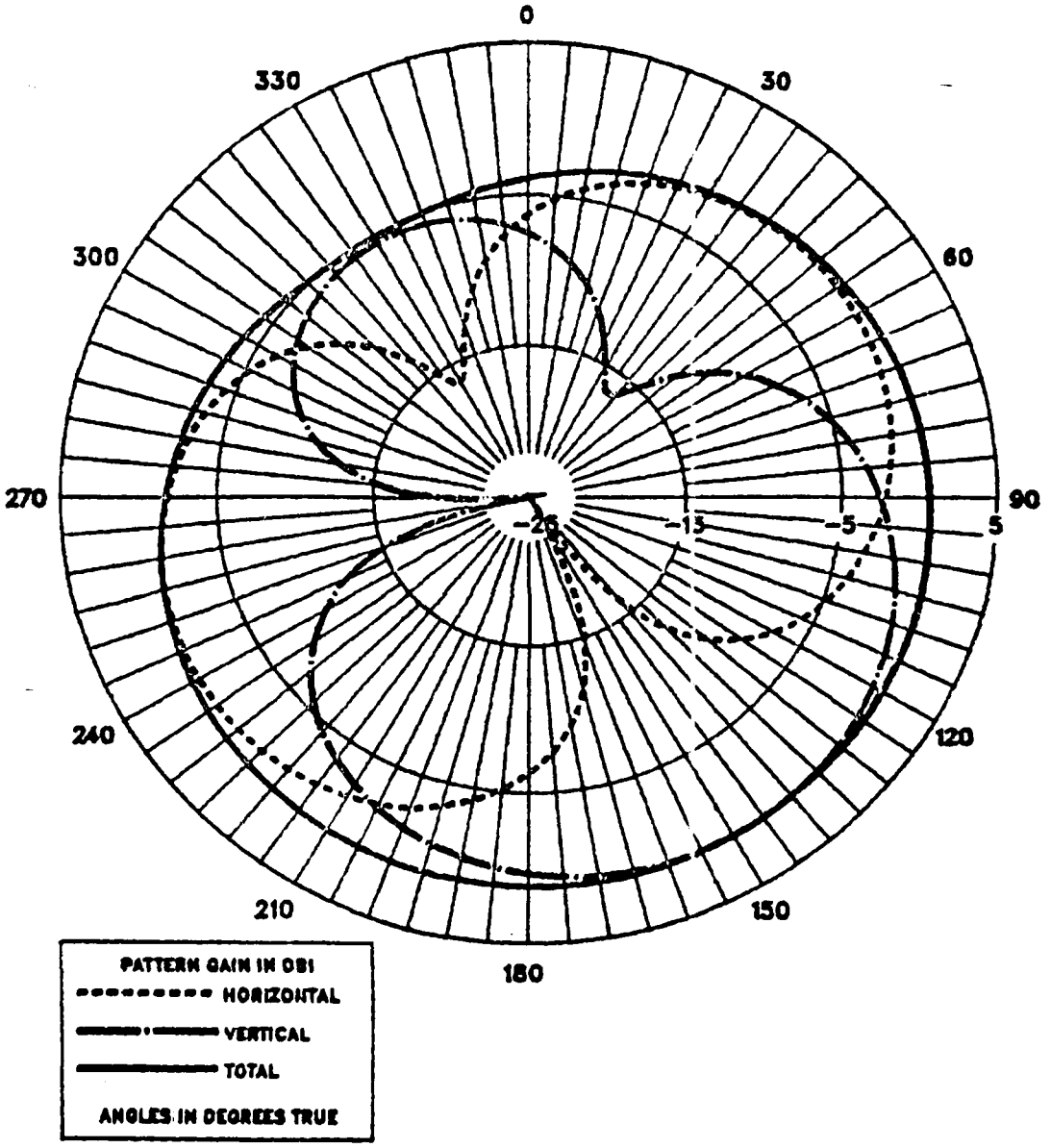

H65 IGUANA DATA RUN AT 3.123MHZ ON 8/19/87

COLLINS 437R-2 ANT, FREE SPACE, VERT CUT, PHI=0

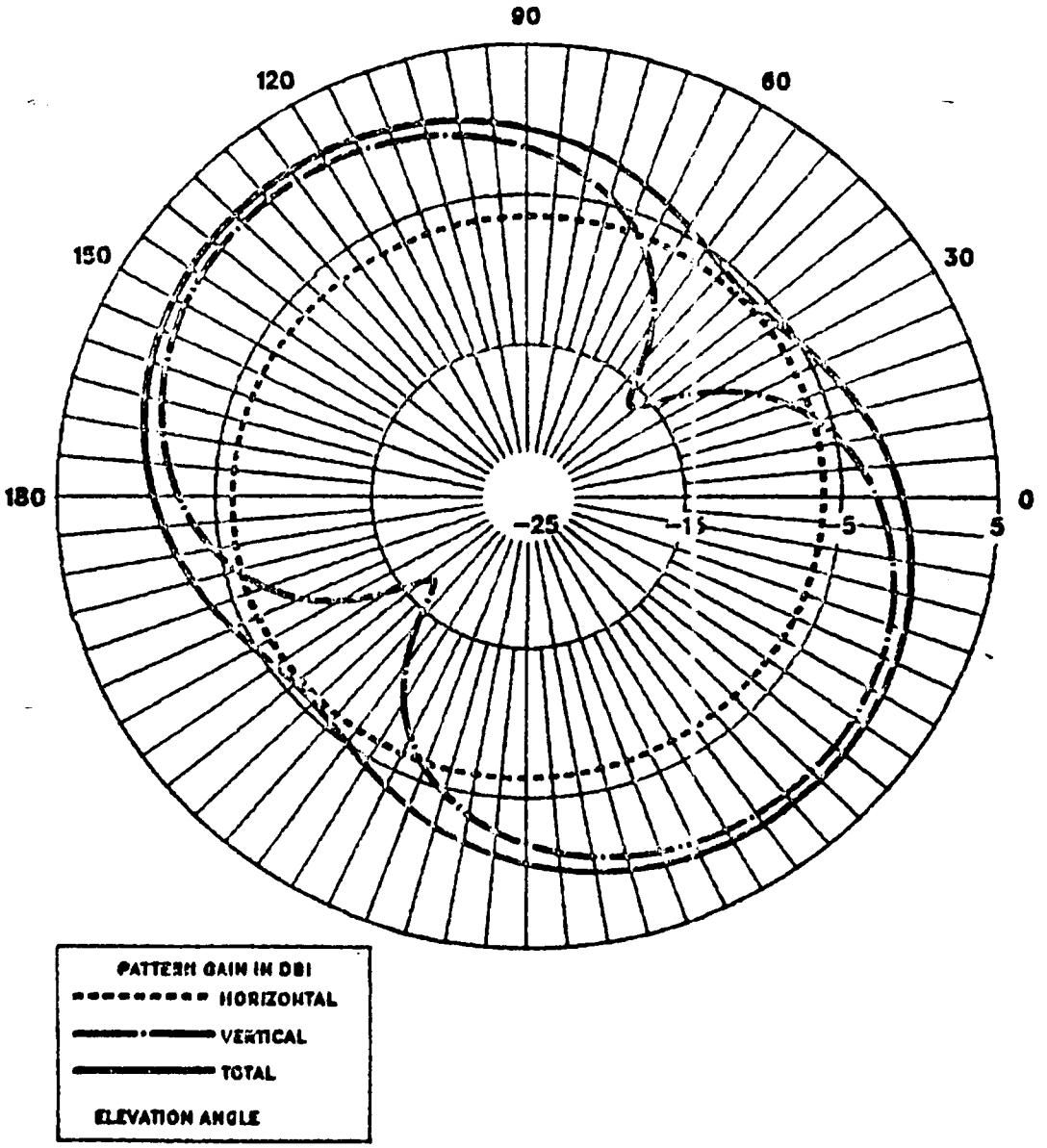

H65 IGUANA DATA RUN AT 3.123MHZ ON 8/19/87

COLLINS 437R-2 ANT, FREE SPACE, VERT CUT, PHI=45

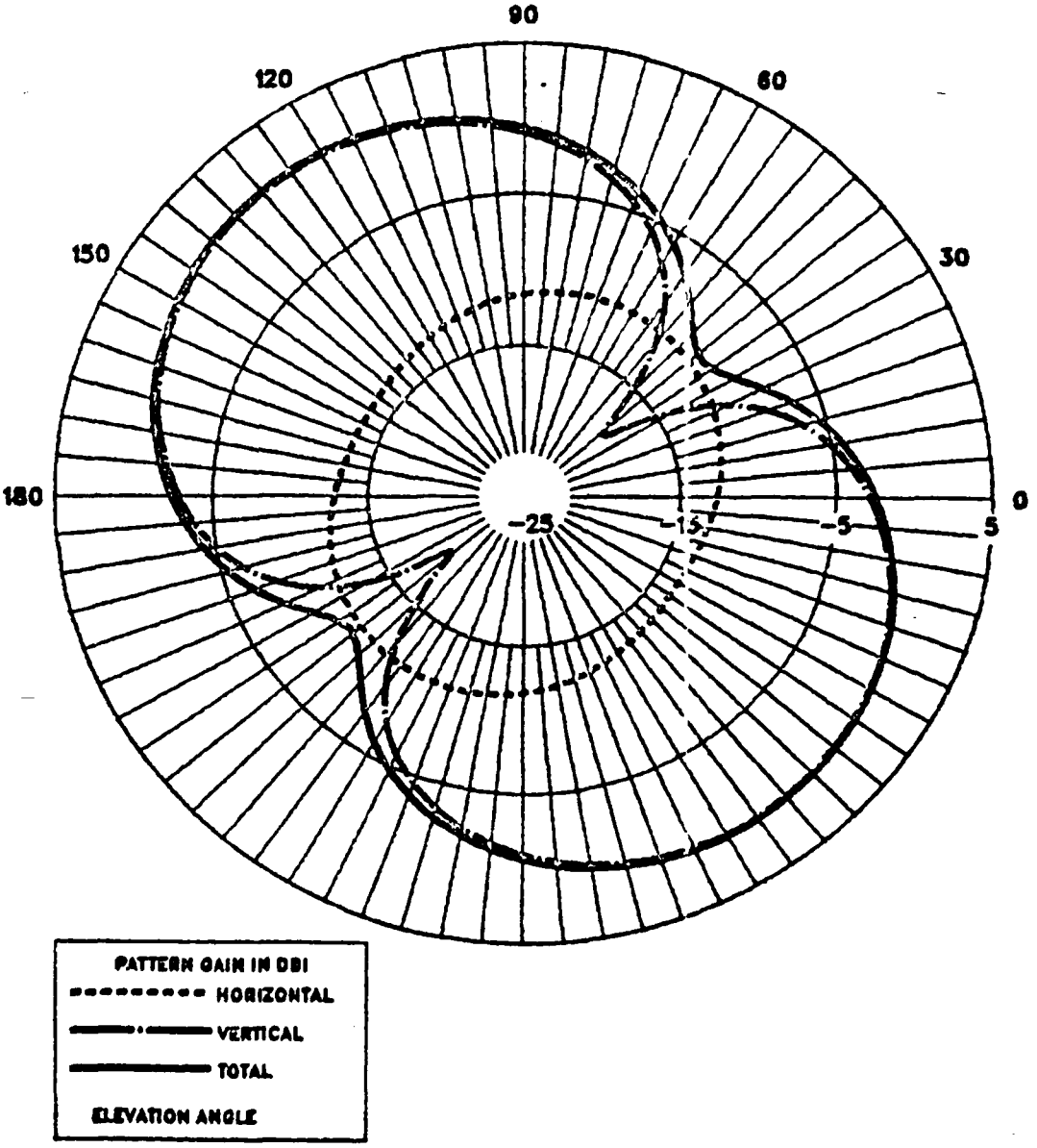

H65 IGUANA DATA RUN AT 3.123MHZ ON 8/19/87

ARMY–TYPE TUBE ANT, FREE SPACE, HORIZ CUT, THETA=90

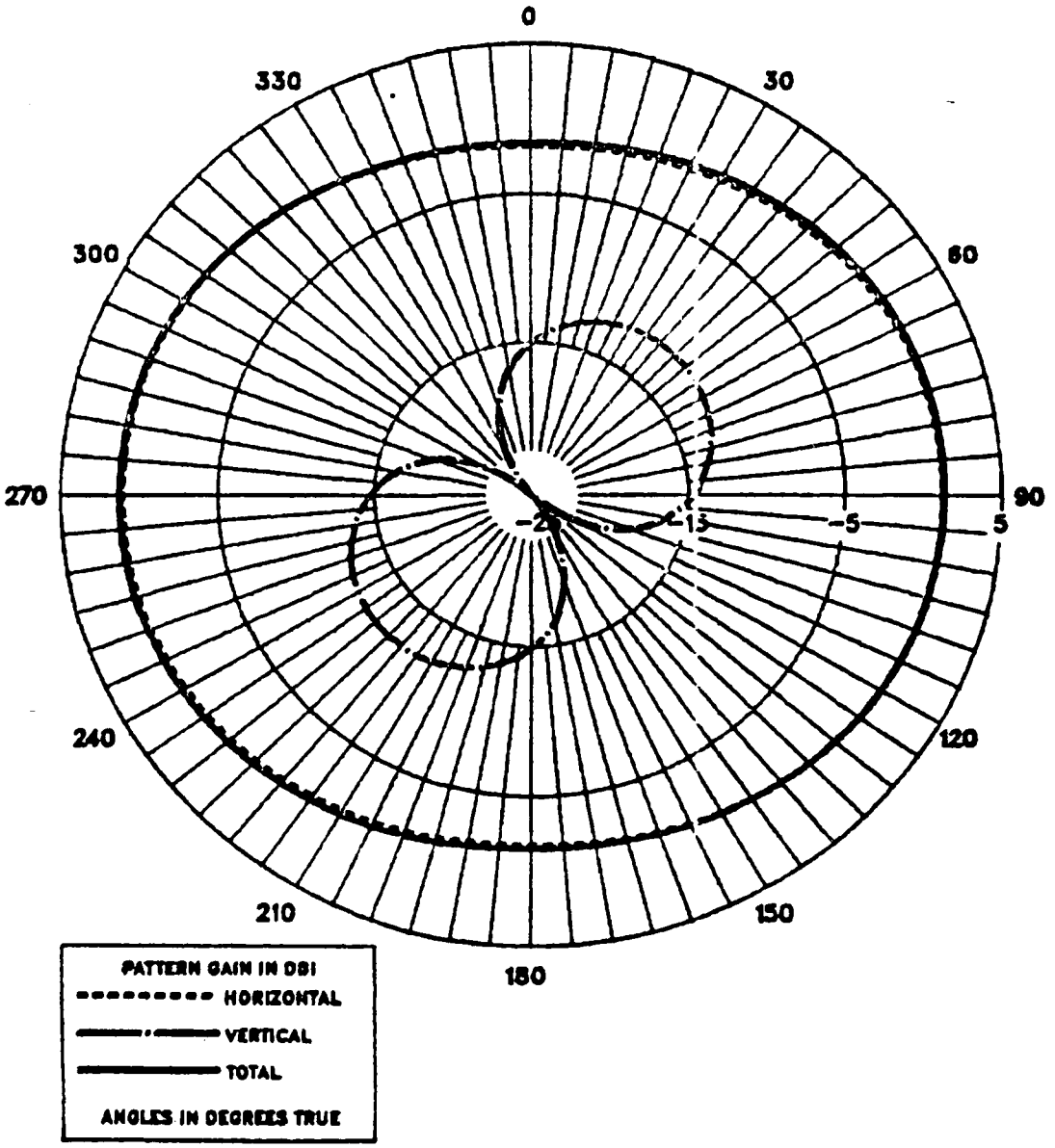

H65 IGUANA DATA RUN AT 3.123MHZ ON 8/19/87

ARMY–TYPE TUBE ANT, FREE SPACE, HORIZ CUT, THETA=26

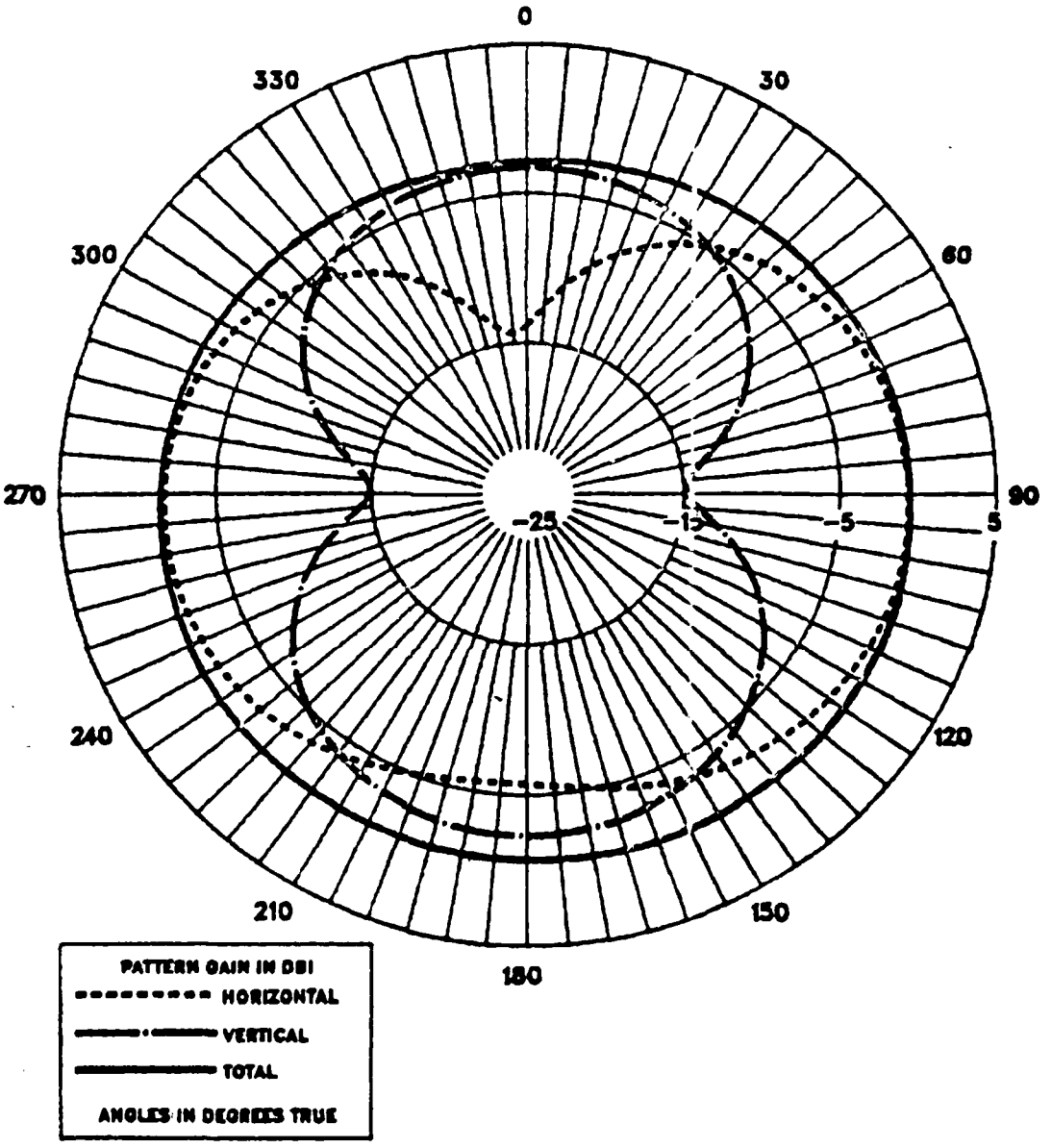

H65 IGUANA DATA RUN AT 3.123MHZ ON 8/19/87

ARMY-TYPE TUBE ANT, FREE SPACE, VERT CUT, PHI=0

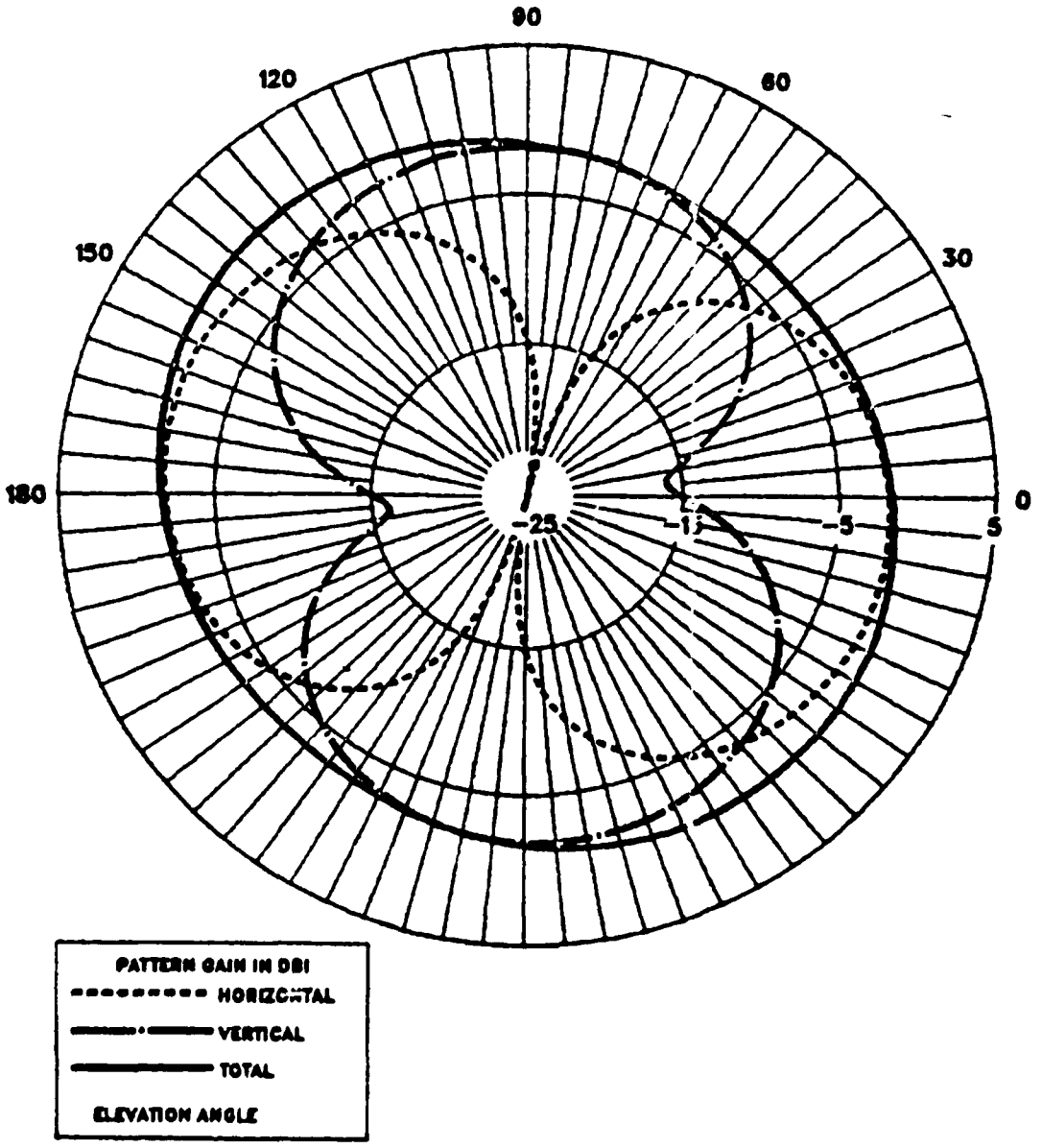

H65 IGUANA DATA RUN AT 3.123MHZ ON 8/19/87

ARMY-TYPE TUBE ANT, FREE SPACE, VERT CUT, PHI=45

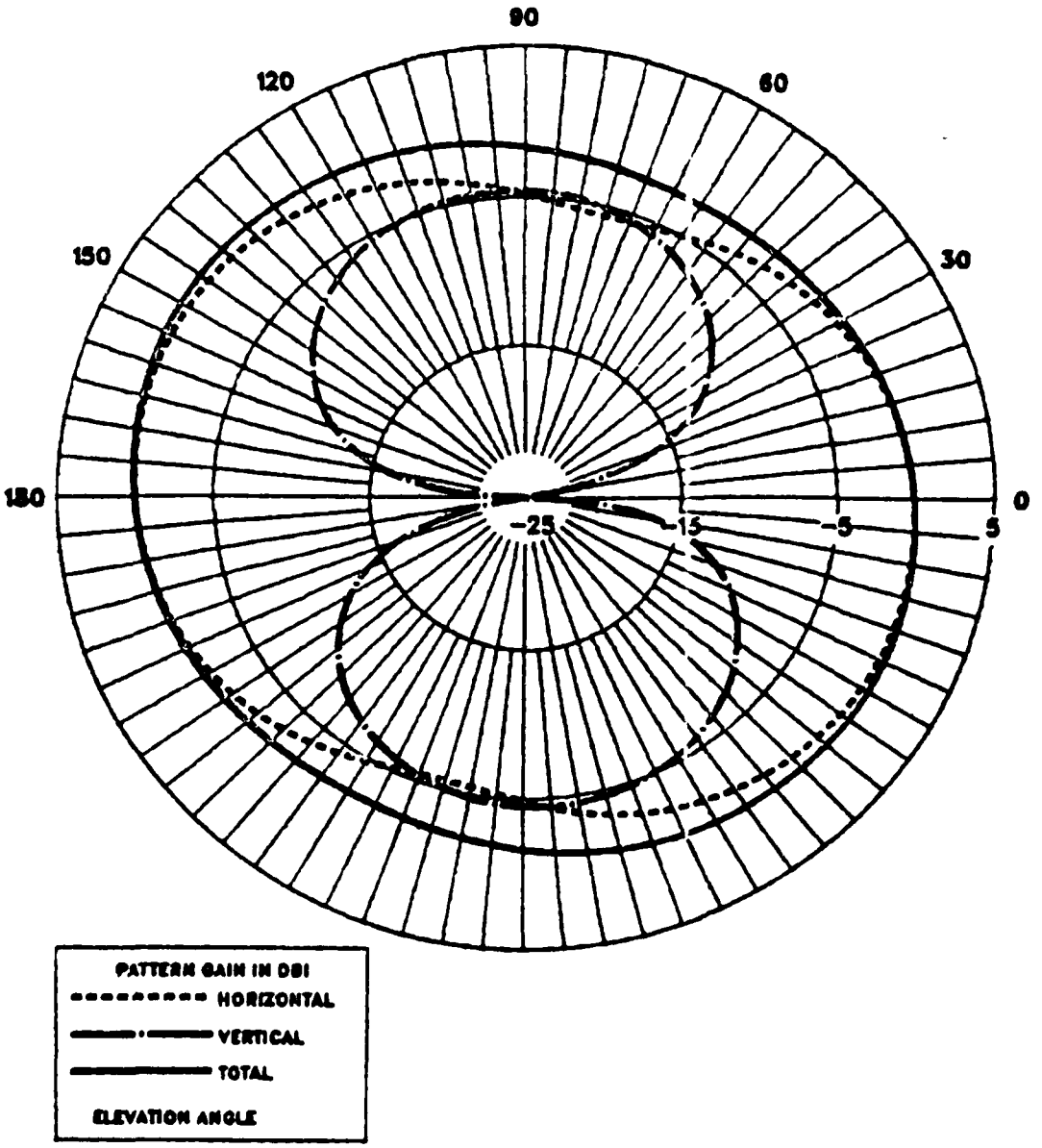

H65 IGUANA DATA RUN AT 3.123MHZ ON 8/19/87

LONG SHUNTED LOOP, FREE SPACE, HORIZ CUT, THETA=90

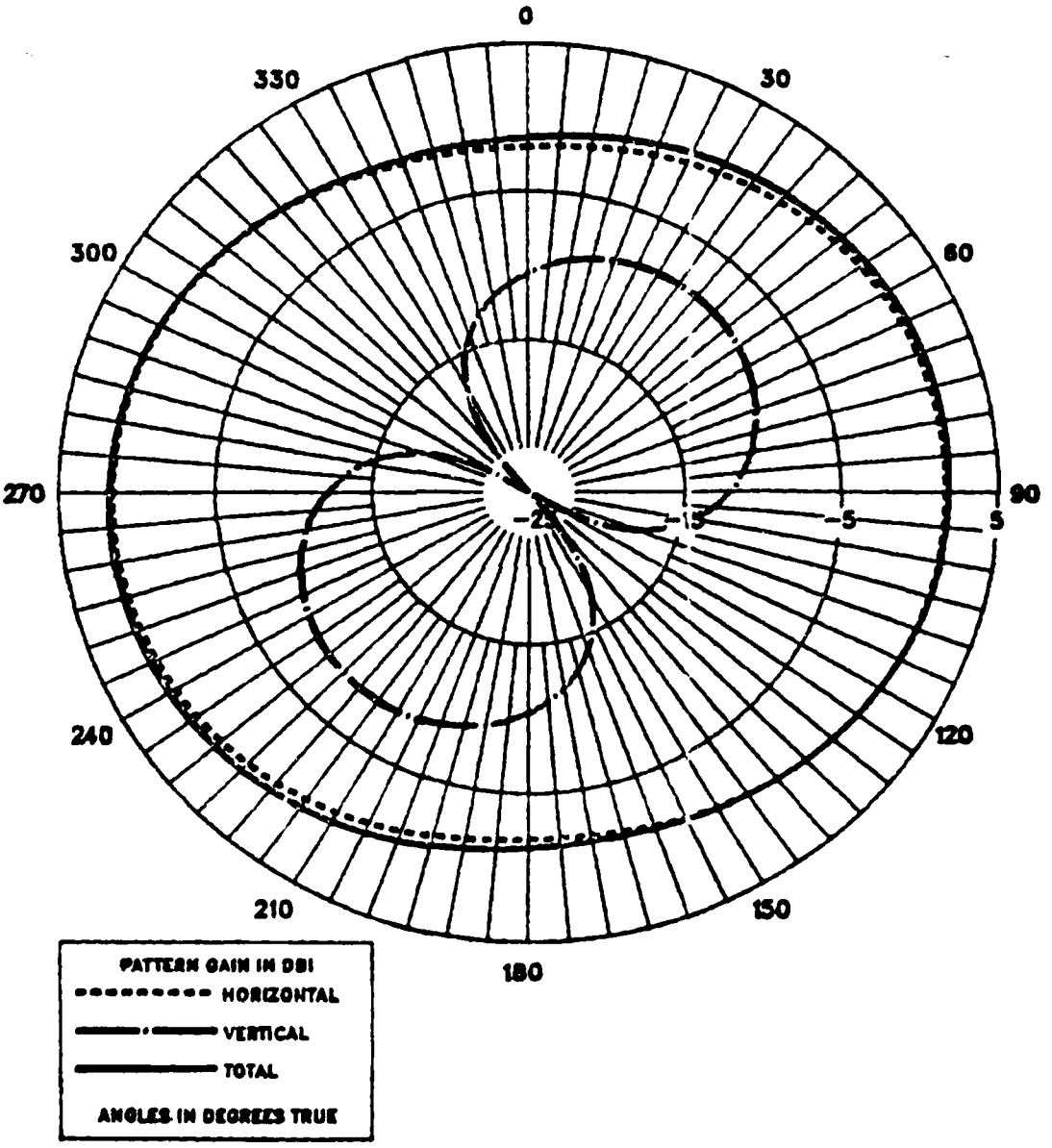

H65 IGUANA DATA RUN AT 3.123MHZ ON 8/19/87

LONG SHUNTED LOOP, FREE SPACE, HORIZ CUT, THETA=26

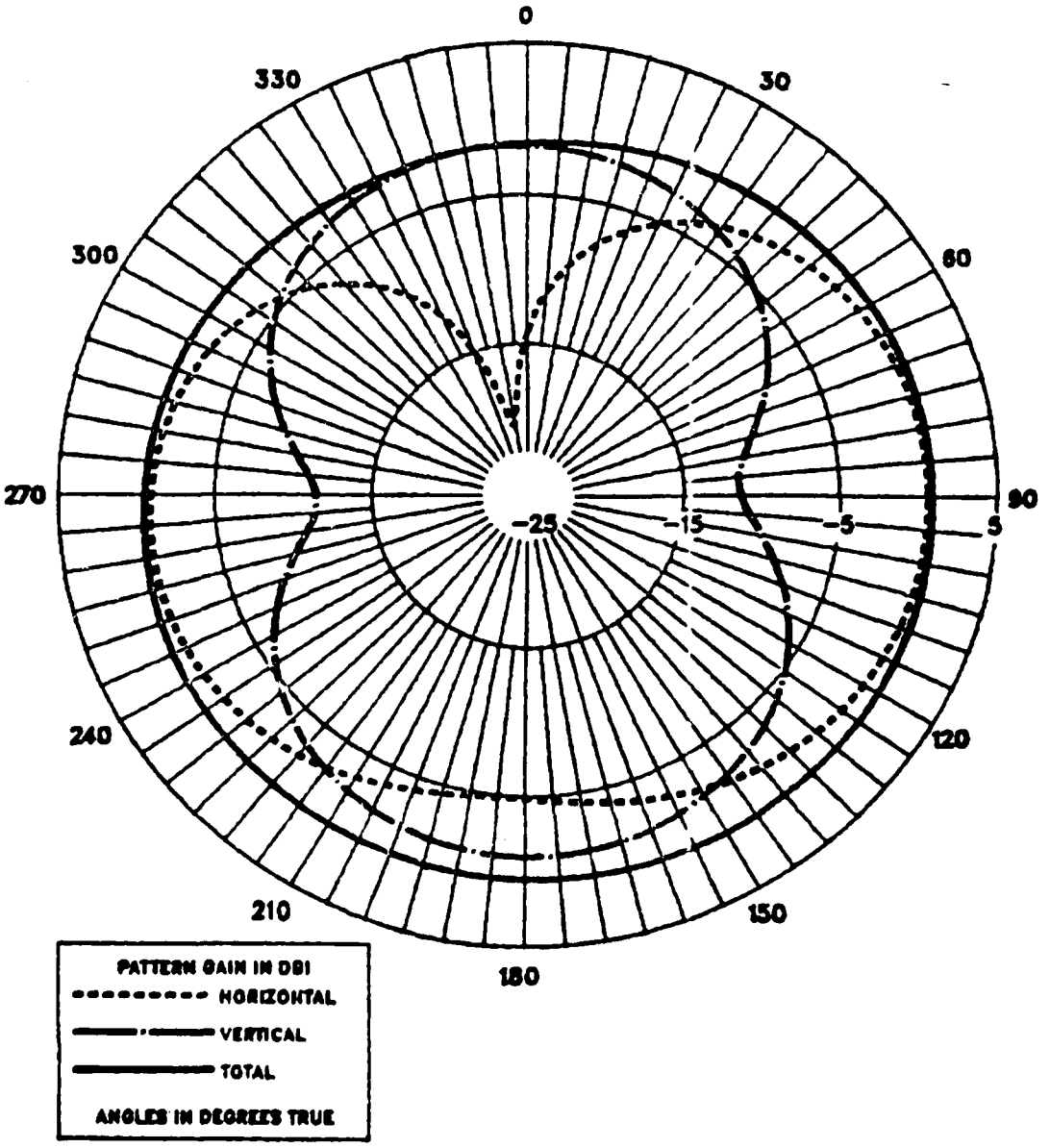

H65 IGUANA DATA RUN AT 3.123MHZ ON 8/19/87

LONG SHUNTED LOOP, FREE SPACE, VERT CUT, PHI=0

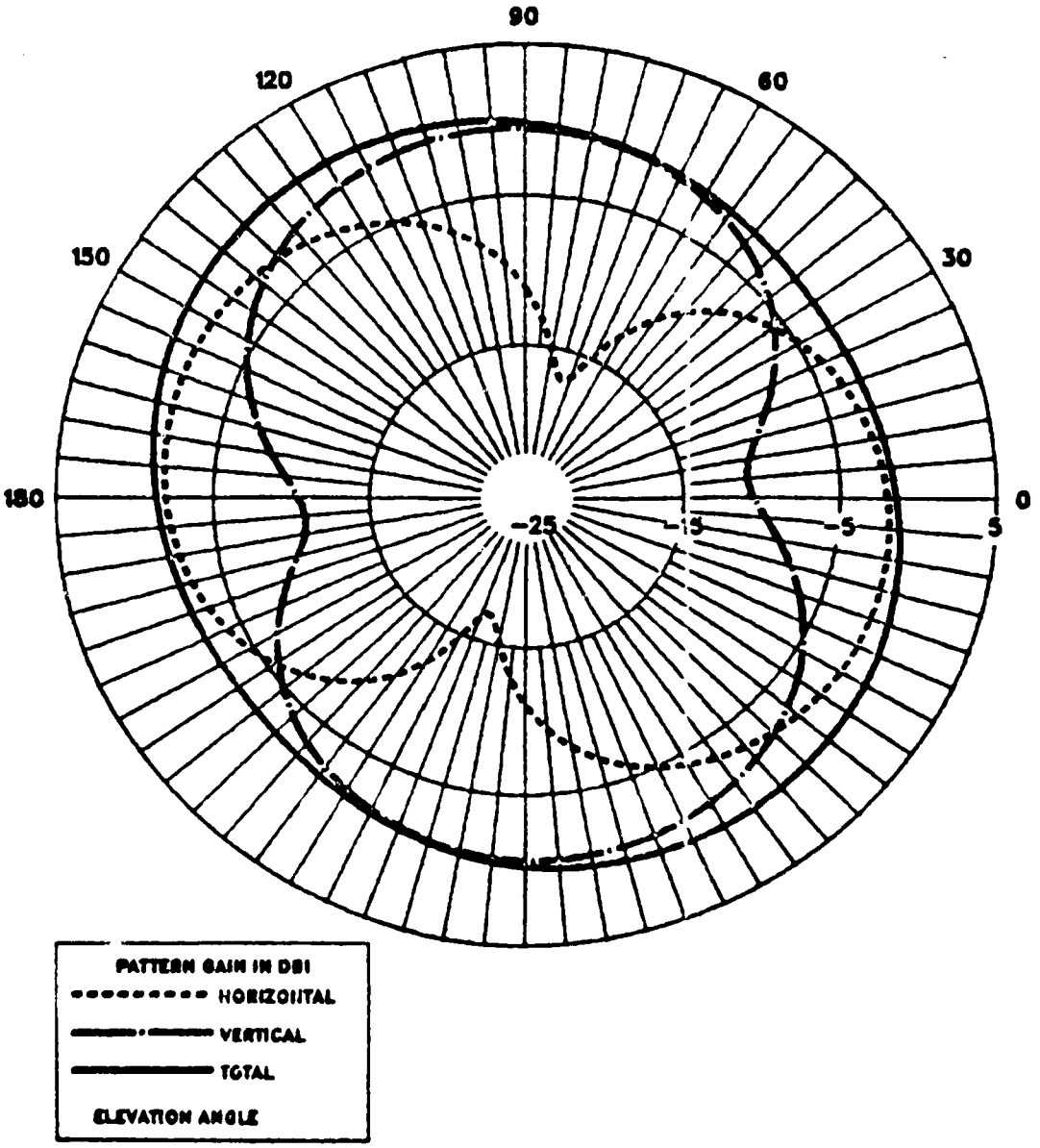

H65 IGUANA DATA RUN AT 3.123MHZ ON 8/19/87

LONG SHUNTED LOOP, FREE SPACE, VERT CUT, PHI=45

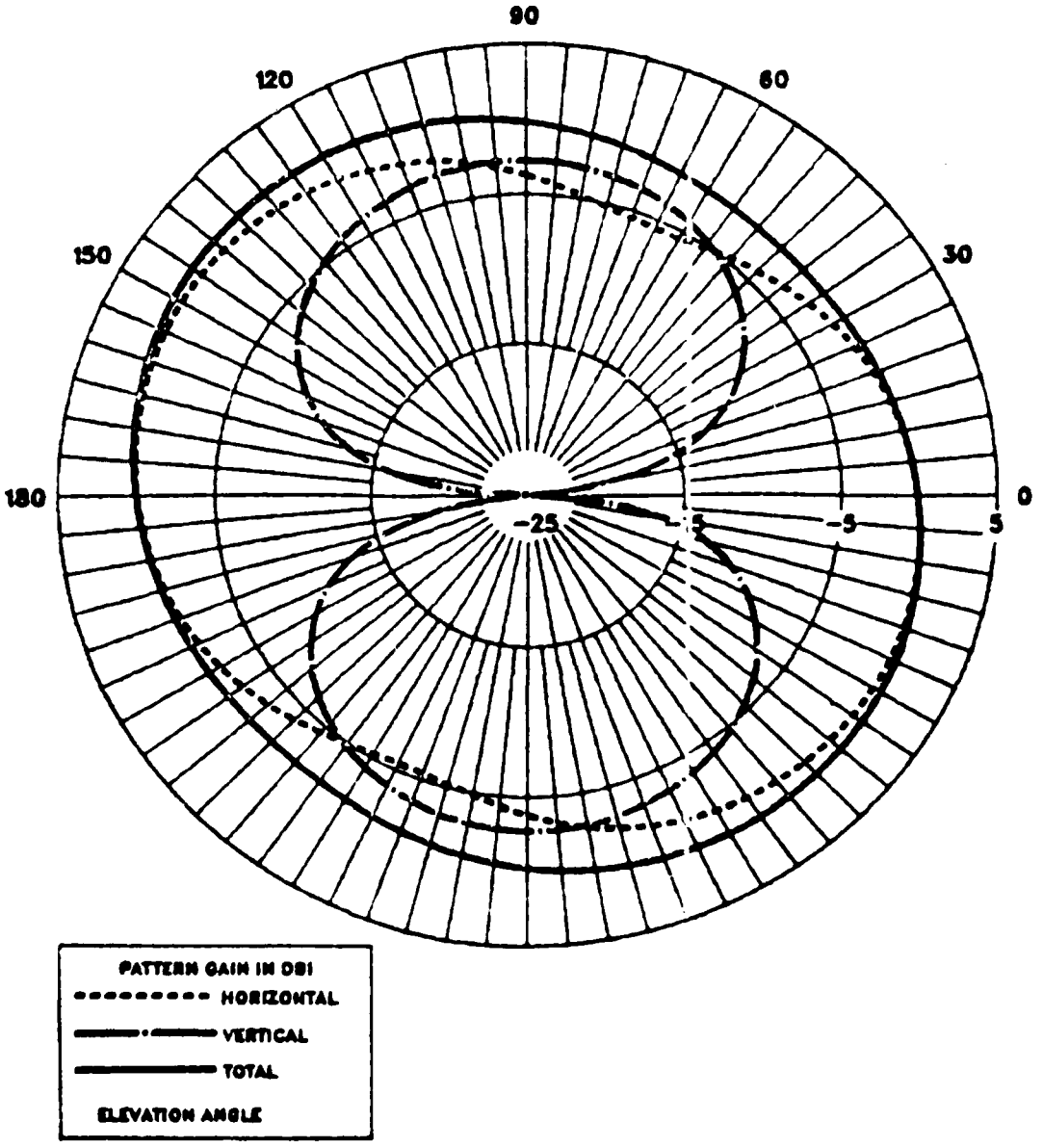

H65 IGUANA DATA RUN AT 4.040MHZ ON 8/15/87

LW ANT SPACE=12", FREE SPACE, HORIZ CUT, THETA=90

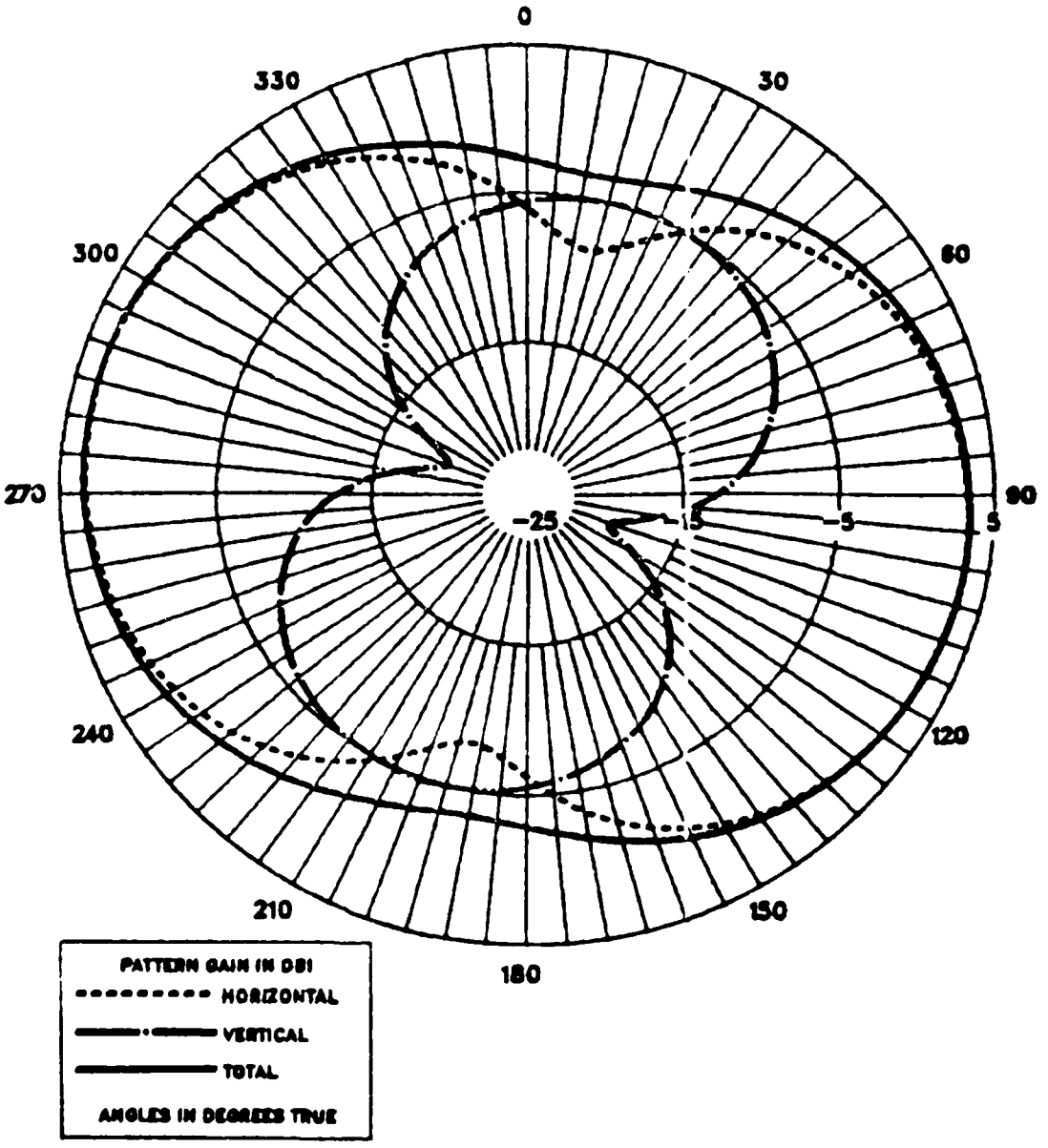

H65 IGUANA DATA RUN AT 4.040MHZ ON 8/15/87

LW ANT SPACE=12", FREE SPACE, HORIZ CUT, THETA=26

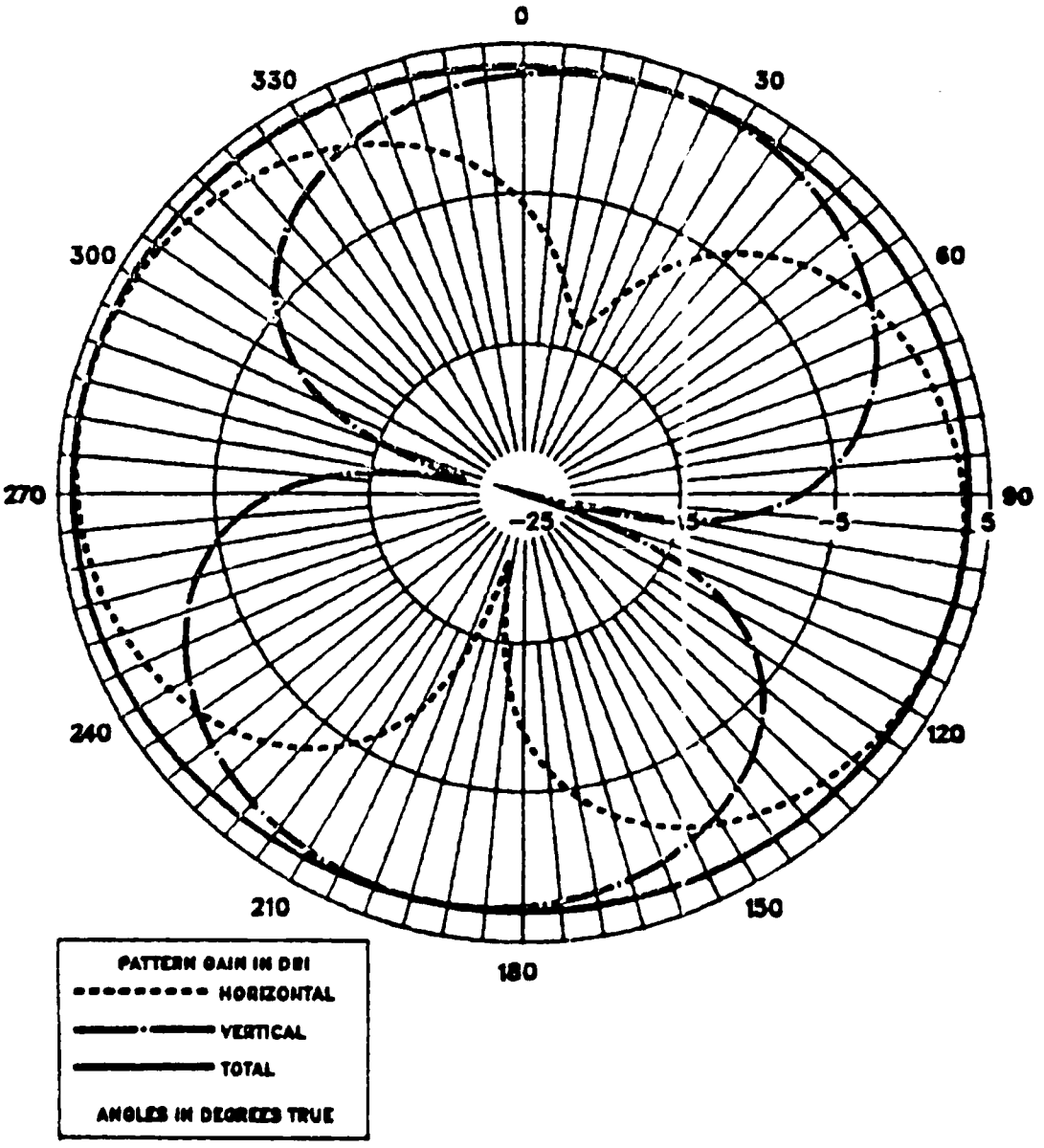

H65 IGUANA DATA RUN AT 4.040MHZ ON 8/15/87

LW ANT SPACE=12", FREE SPACE, VERT CUT, PHI=0

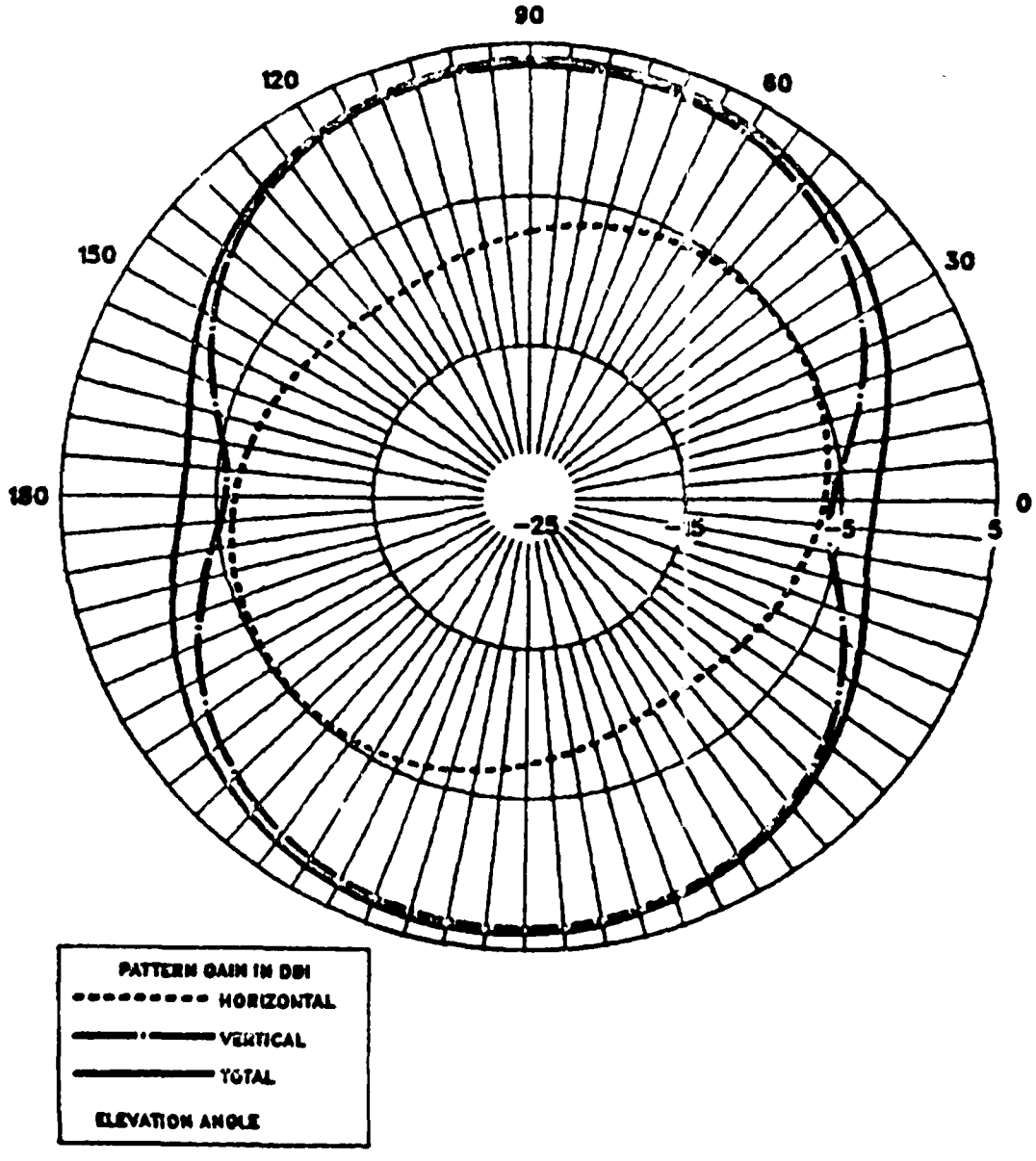

H65 IGUANA DATA RUN AT 4.040MHZ ON 8/15/87

LW ANT SPACE=12", FREE SPACE, VERT CUT, PHI=45

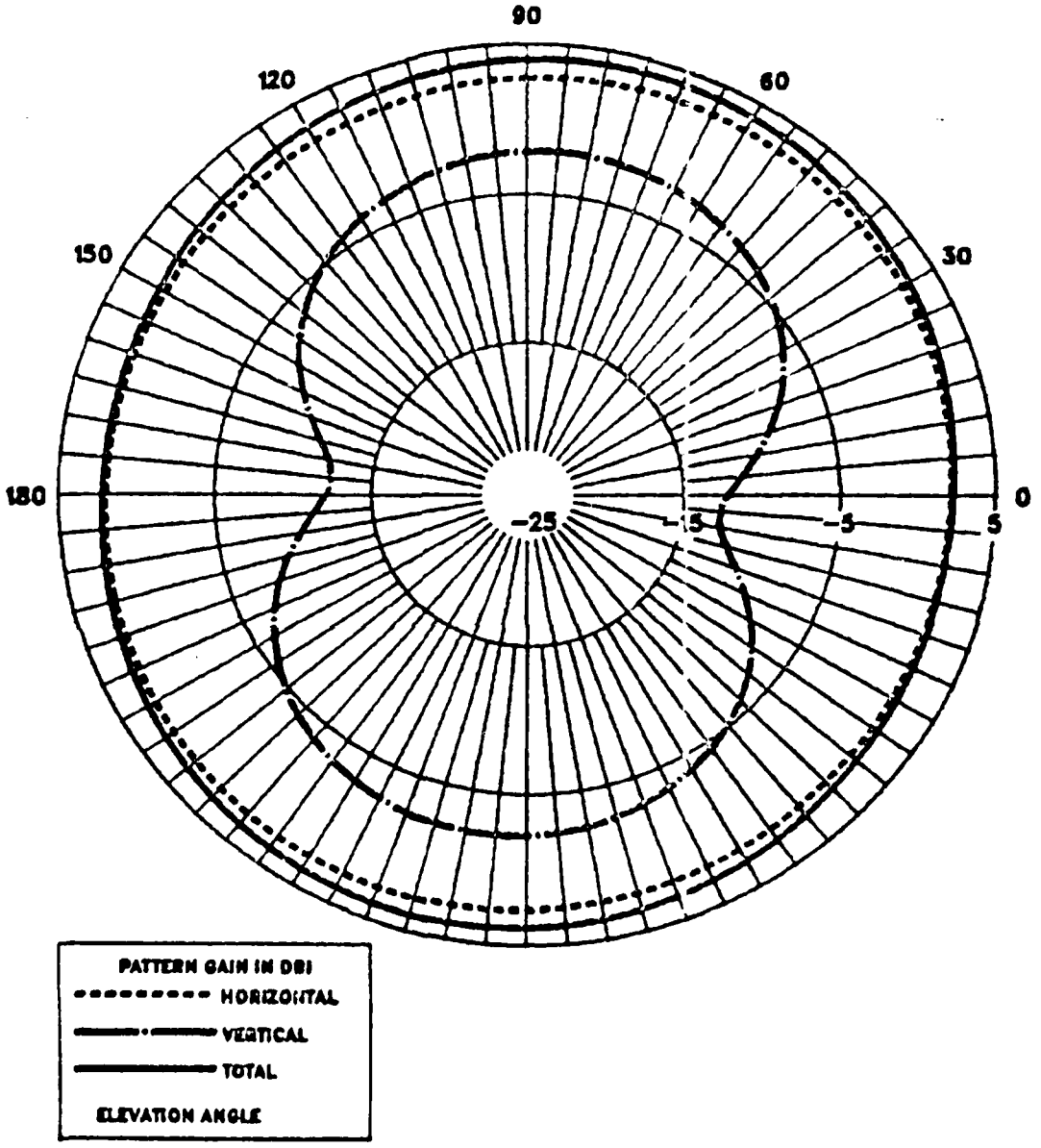

H65 IGUANA DATA RUN AT 4.040MHZ ON 8/15/87

COLLINS 437R-2 ANT, FREE SPACE, HORIZ CUT, THETA=90

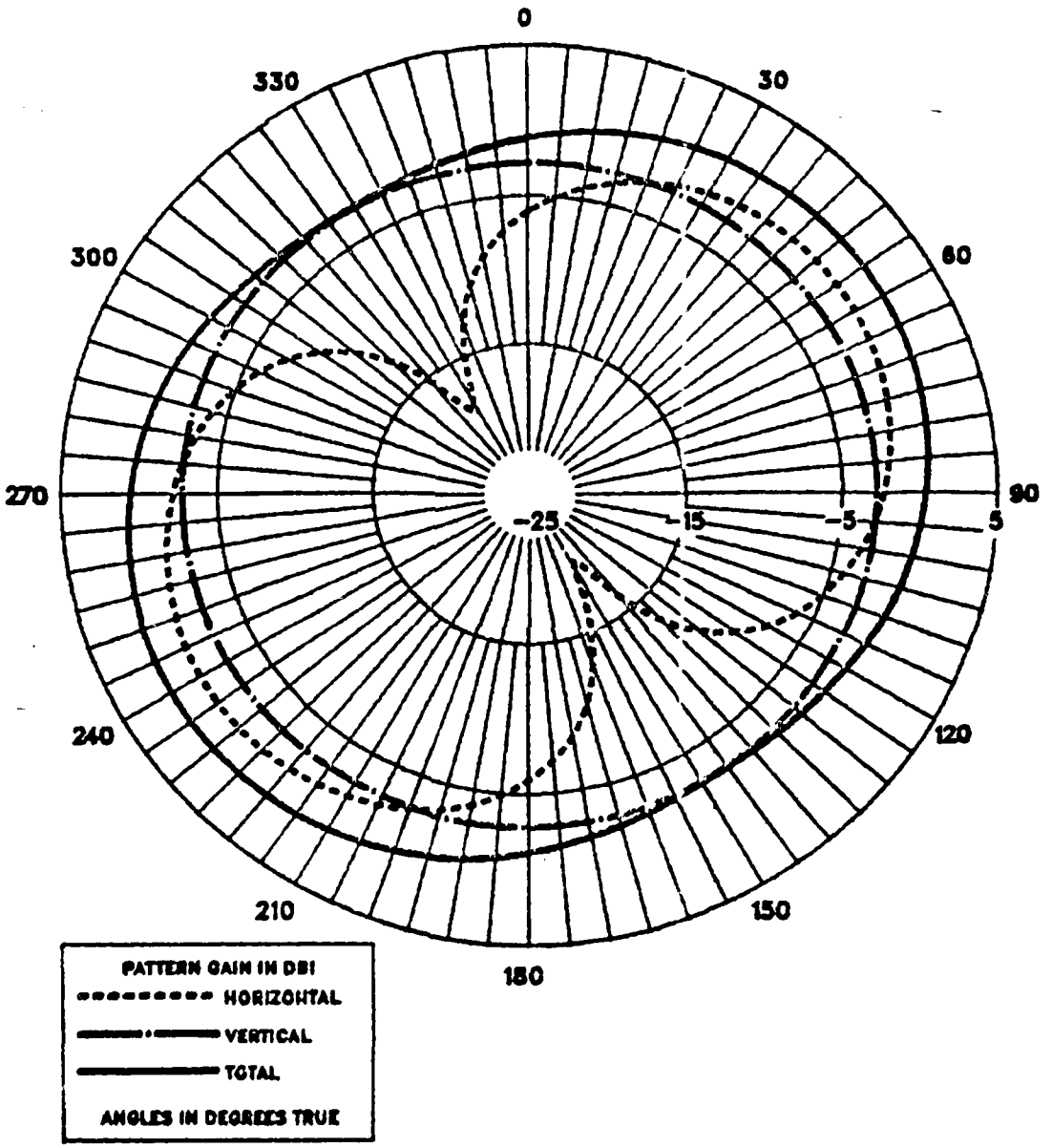

H65 IGUANA DATA RUN AT 4.040MHZ ON 8/15/87

COLLINS 437R-2 ANT, FREE SPACE, HORIZ CUT, THETA=26

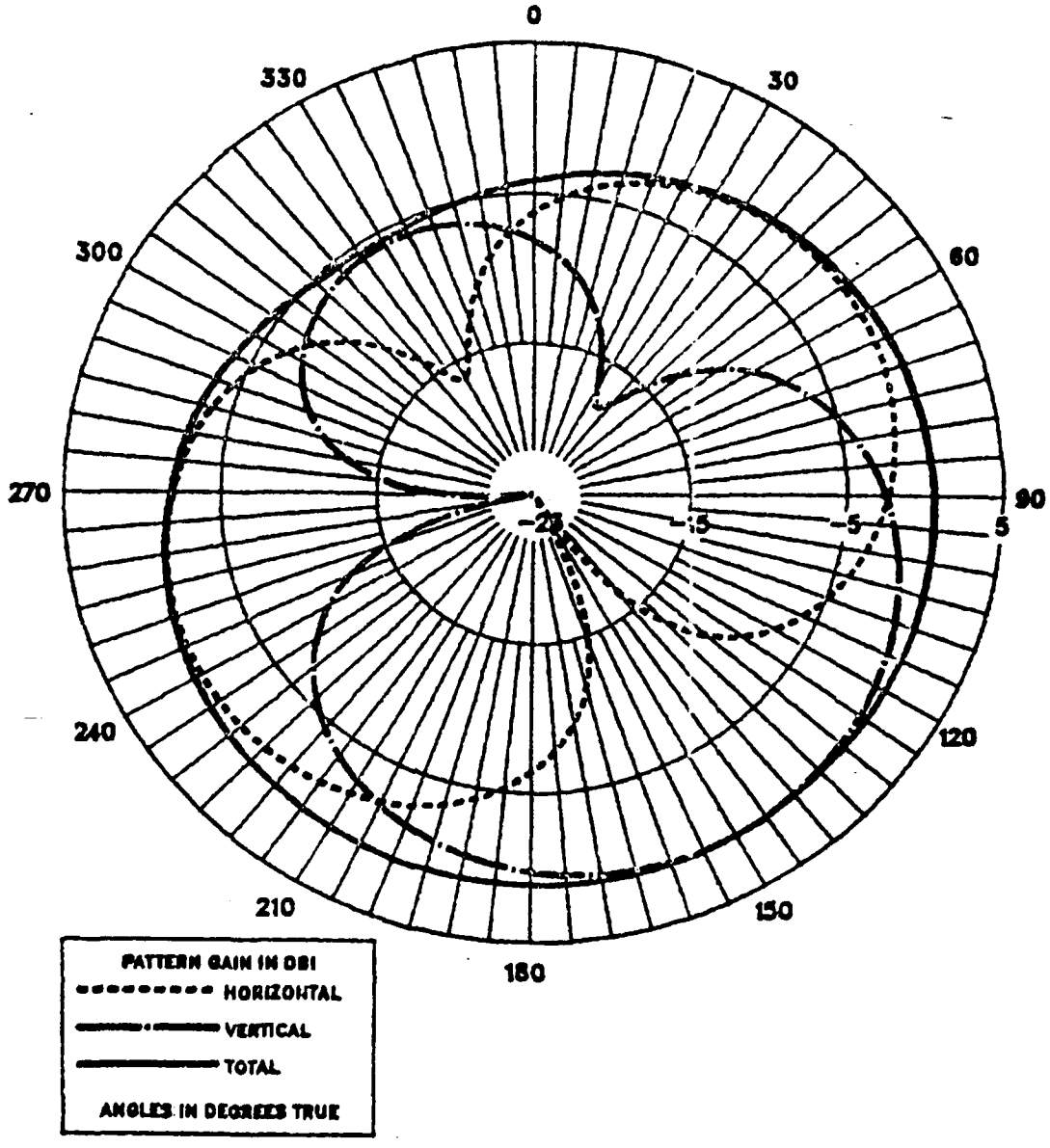

H65 IGUANA DATA RUN AT 4.040MHZ ON 8/15/87

COLLINS 437R-2 ANT, FREE SPACE, VERT CUT, PHI=0

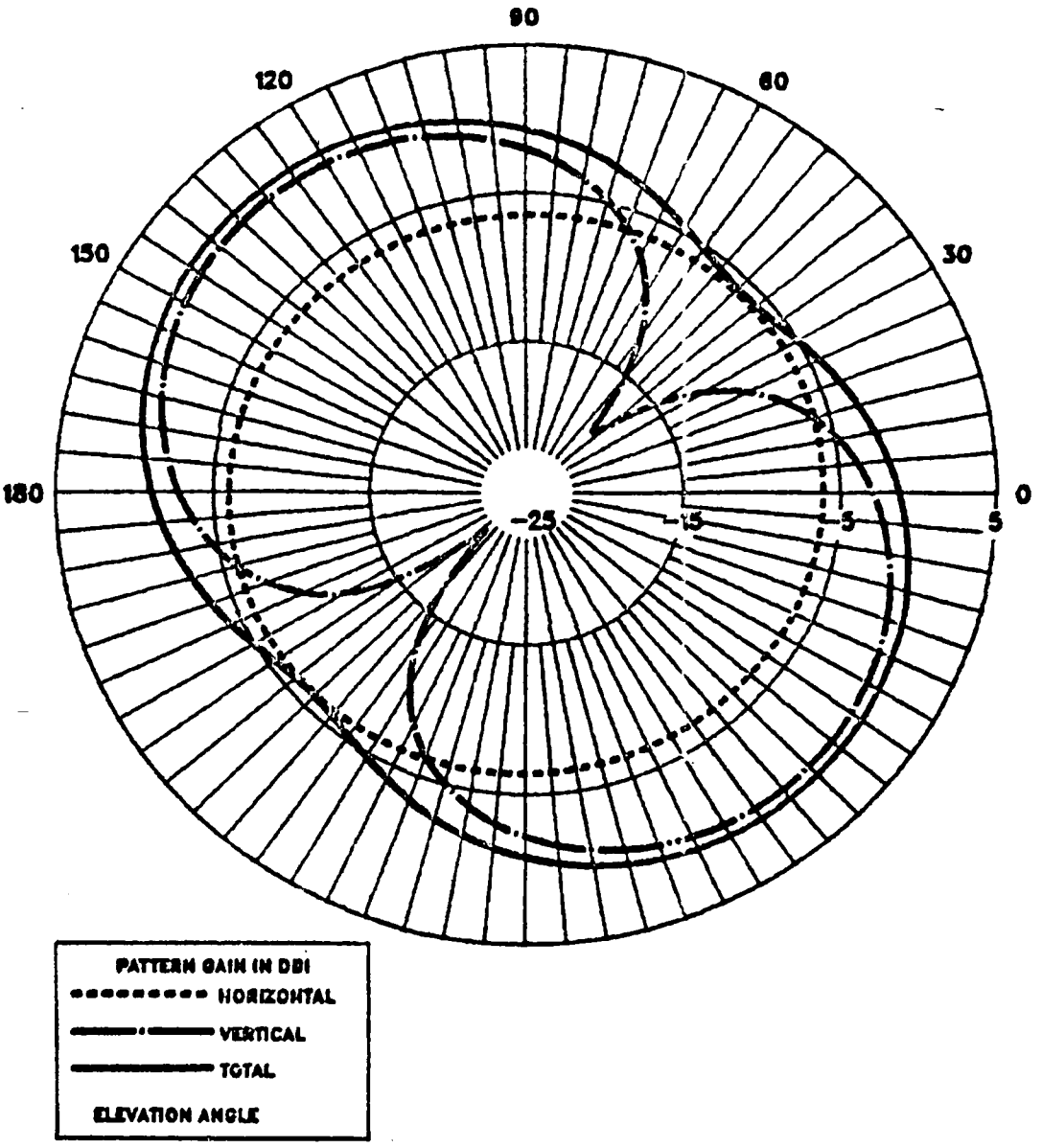

H65 IGUANA DATA RUN AT 4.040MHZ ON 8/15/87

COLLINS 437R-2 ANT, FREE SPACE, VERT CUT, PHI=45

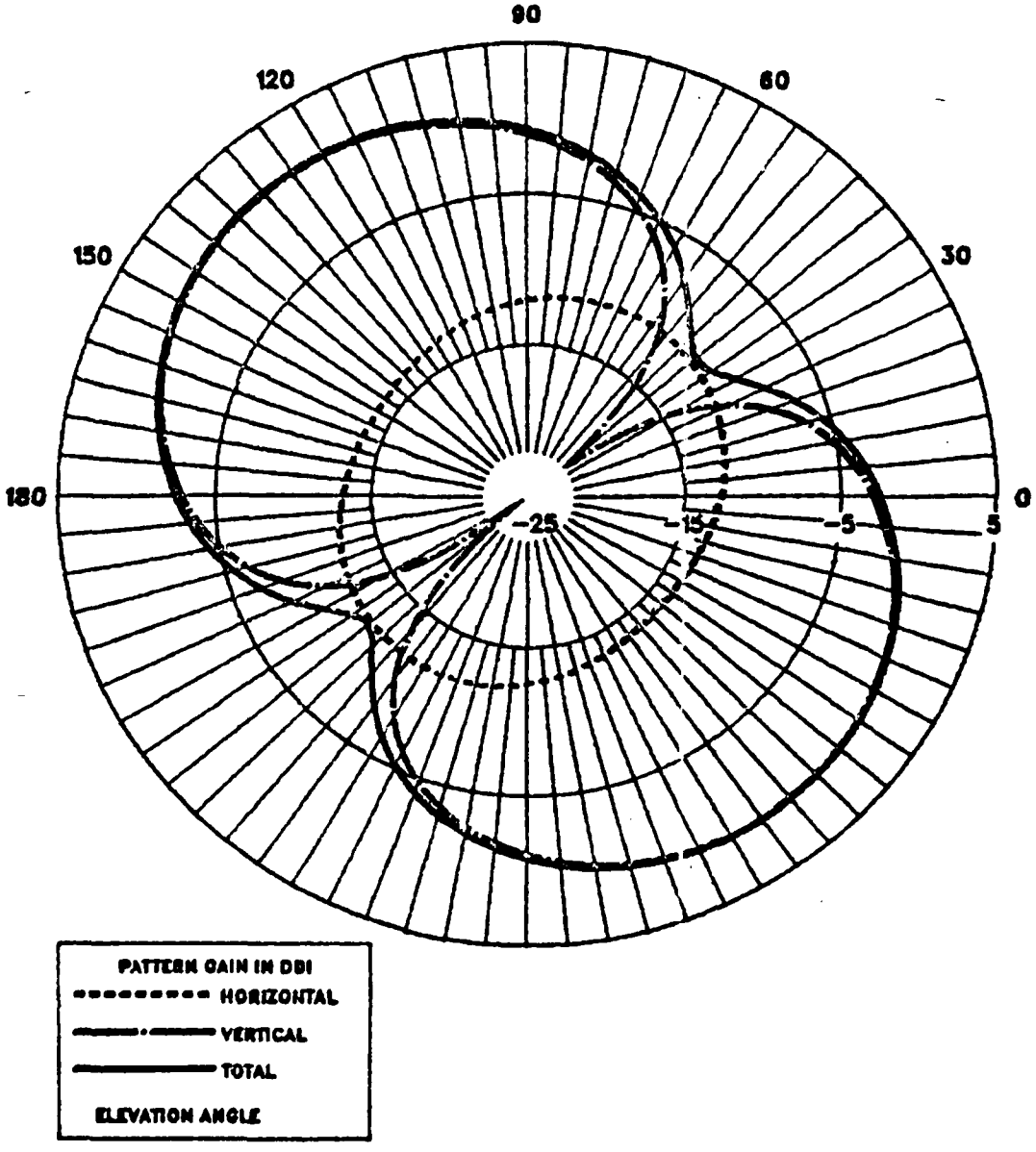

H65 IGUANA DATA RUN AT 4.040MHZ ON 8/15/87

ARMY–TYPE TUBE ANT, FREE SPACE, HORIZ CUT, THETA=90

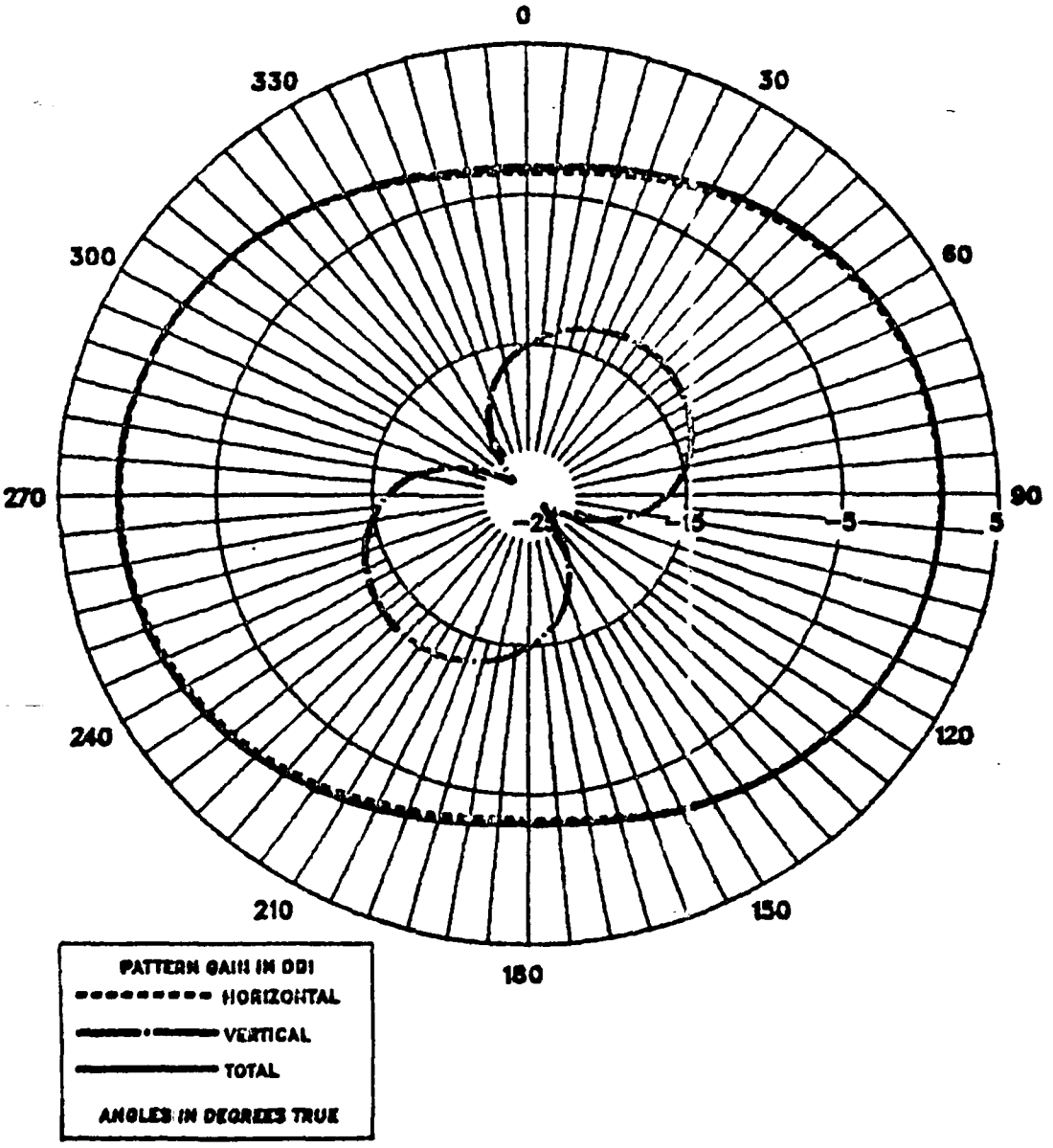

H65 IGUANA DATA RUN AT 4.040MHZ ON 8/15/87

ARMY–TYPE TUBE ANT, FREE SPACE, HORIZ CUT, THETA=26

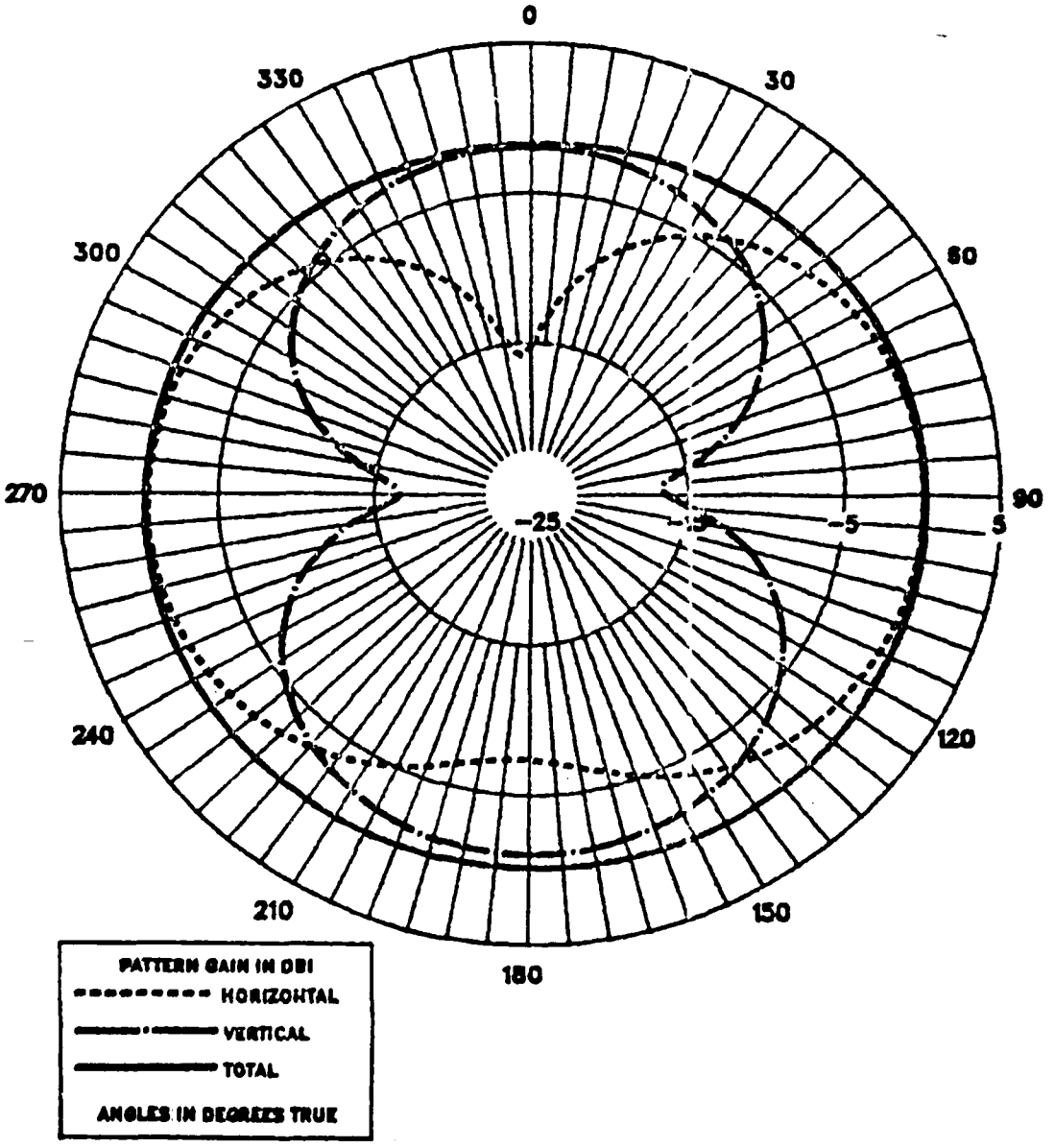

H65 IGUANA DATA RUN AT 4.040MHZ ON 8/15/87

ARMY-TYPE TUBE ANT, FREE SPACE, VERT CUT, PHI=0

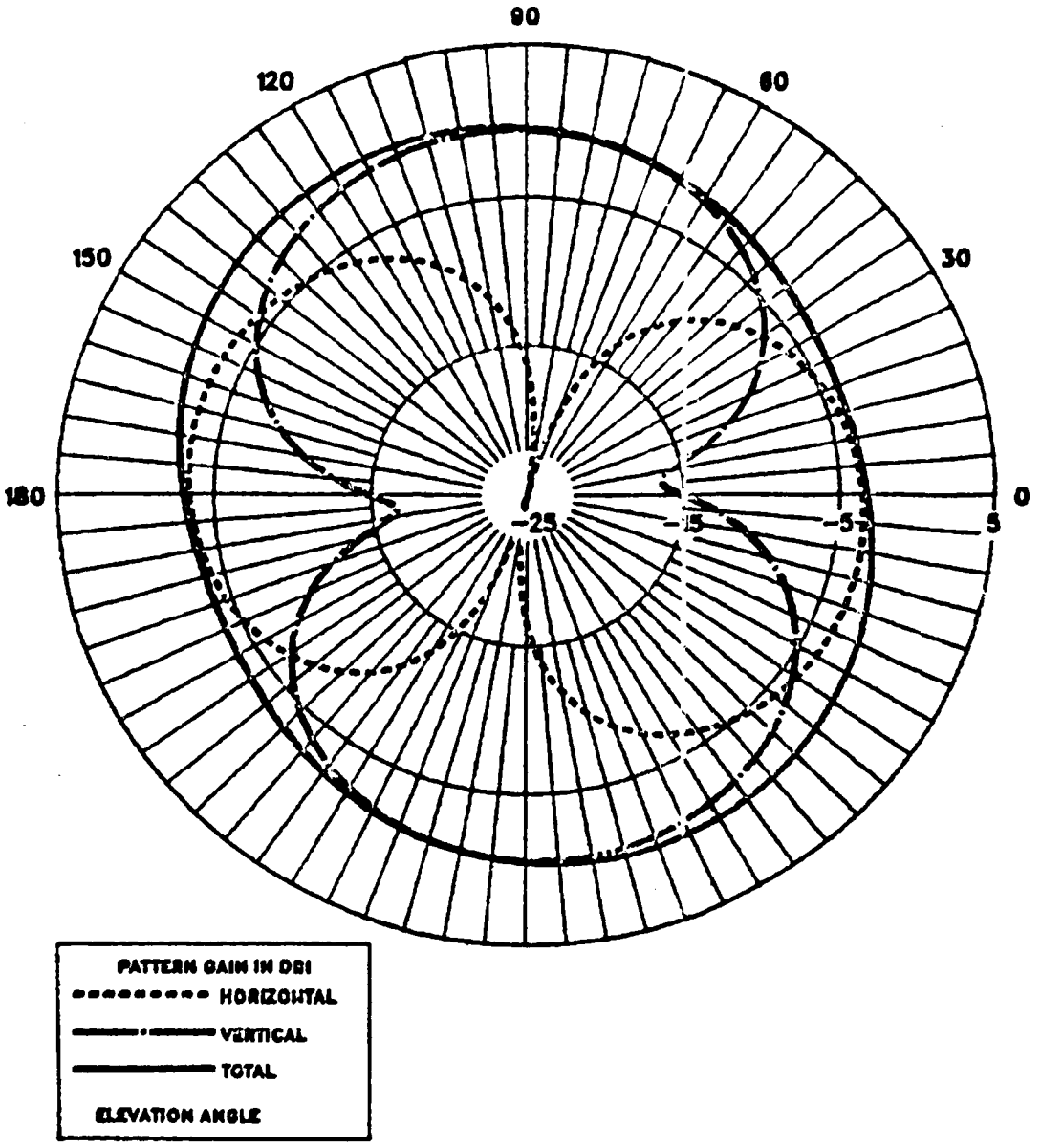

H65 IGUANA DATA RUN AT 4.040MHZ ON 8/15/87

ARMY-TYPE TUBE ANT, FREE SPACE, VERT CUT, PHI=45

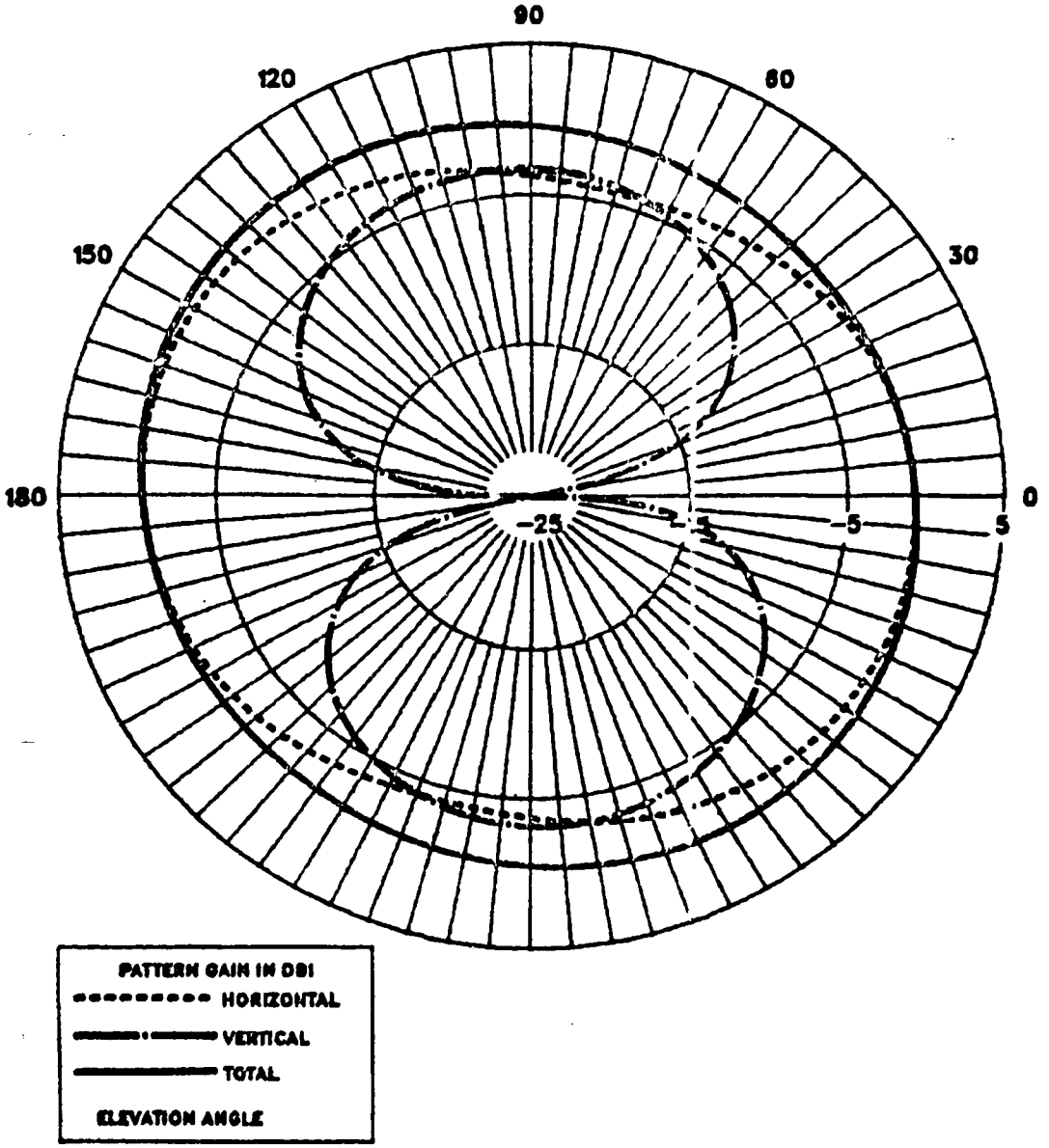

H65 IGUANA DATA RUN AT 4.040MHZ ON 8/15/87

LONG SHUNTED LOOP, FREE SPACE, HORIZ CUT, THETA=90

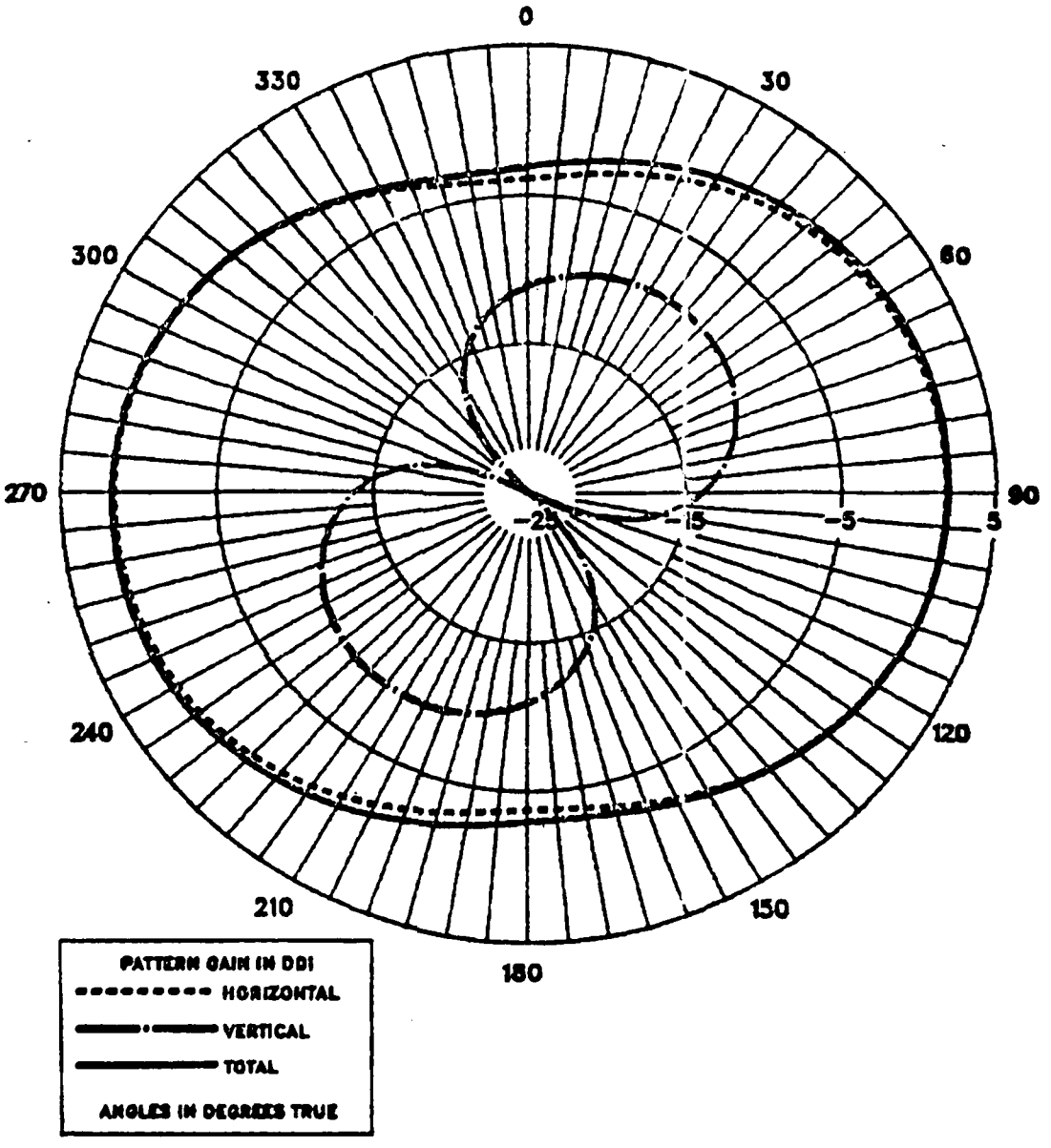

H65 IGUANA DATA RUN AT 4.040MHZ ON 8/15/87

LONG SHUNTED LOOP, FREE SPACE, HORIZ CUT, THETA=26

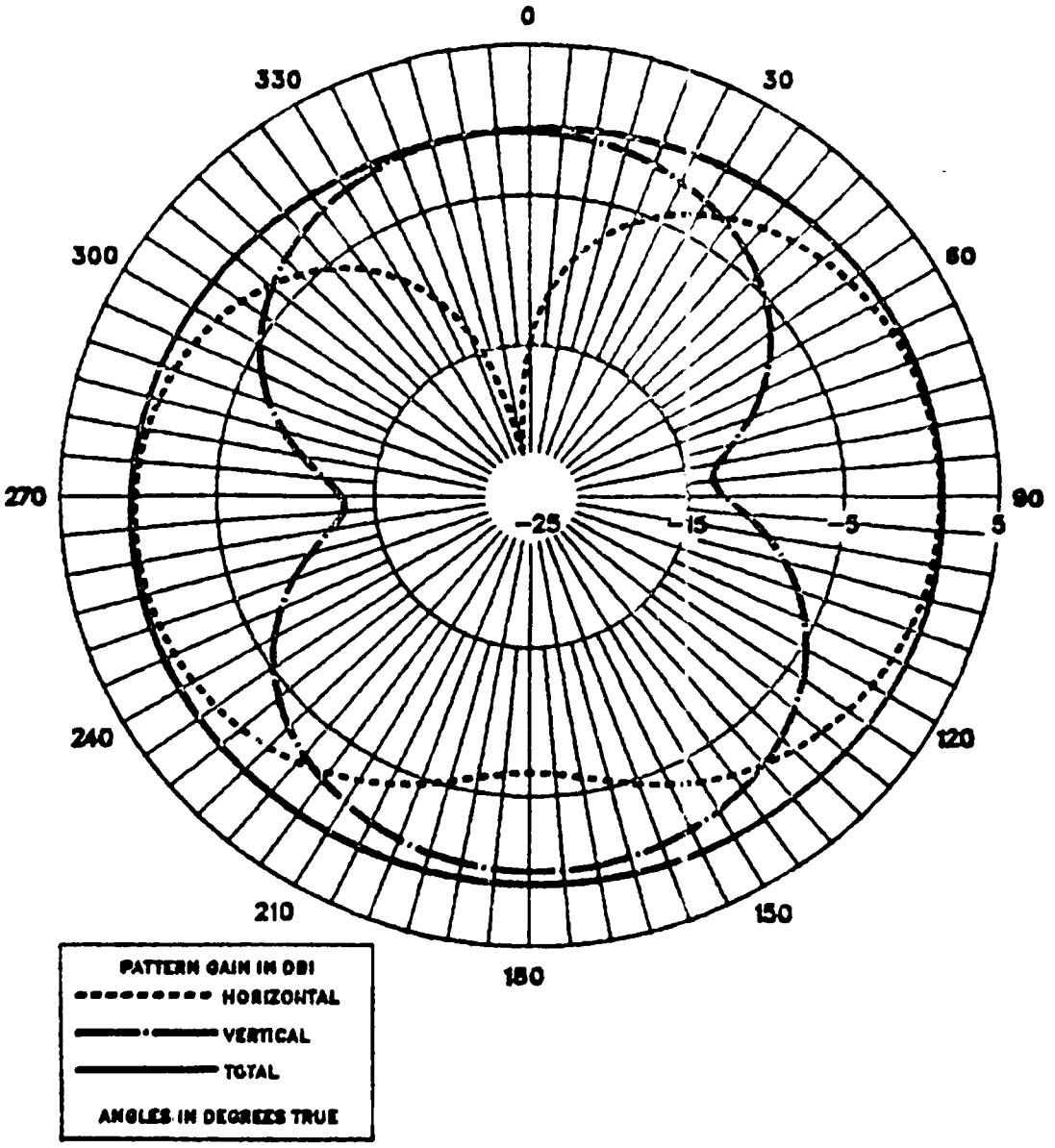

H65 IGUANA DATA RUN AT 4.040MHZ ON 8/15/87

LONG SHUNTED LOOP, FREE SPACE, VERT CUT, PHI=0

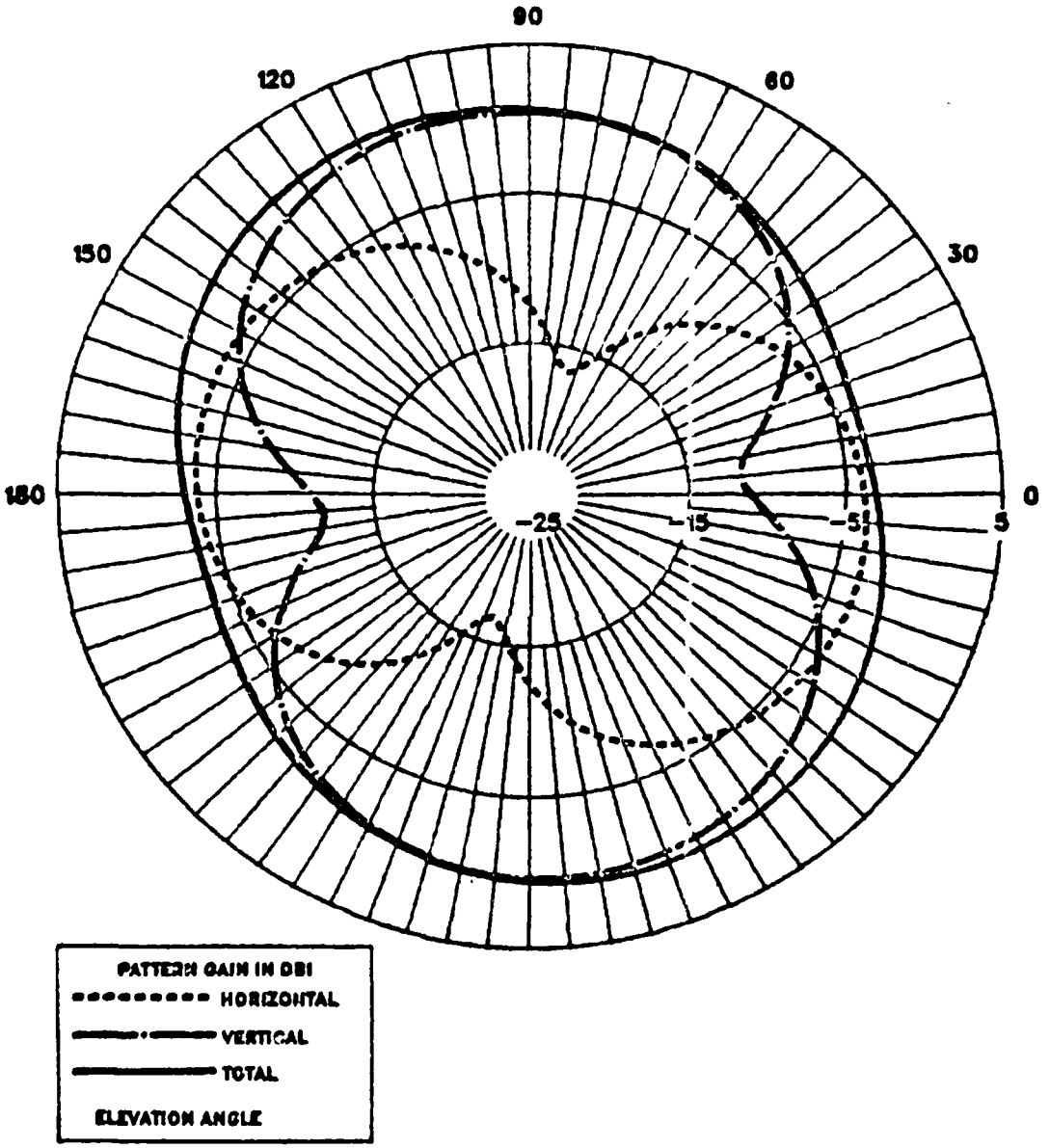

H65 IGUANA DATA RUN AT 4.040MHZ ON 8/15/87

LONG SHUNTED LOOP, FREE SPACE, VERT CUT, PHI=45

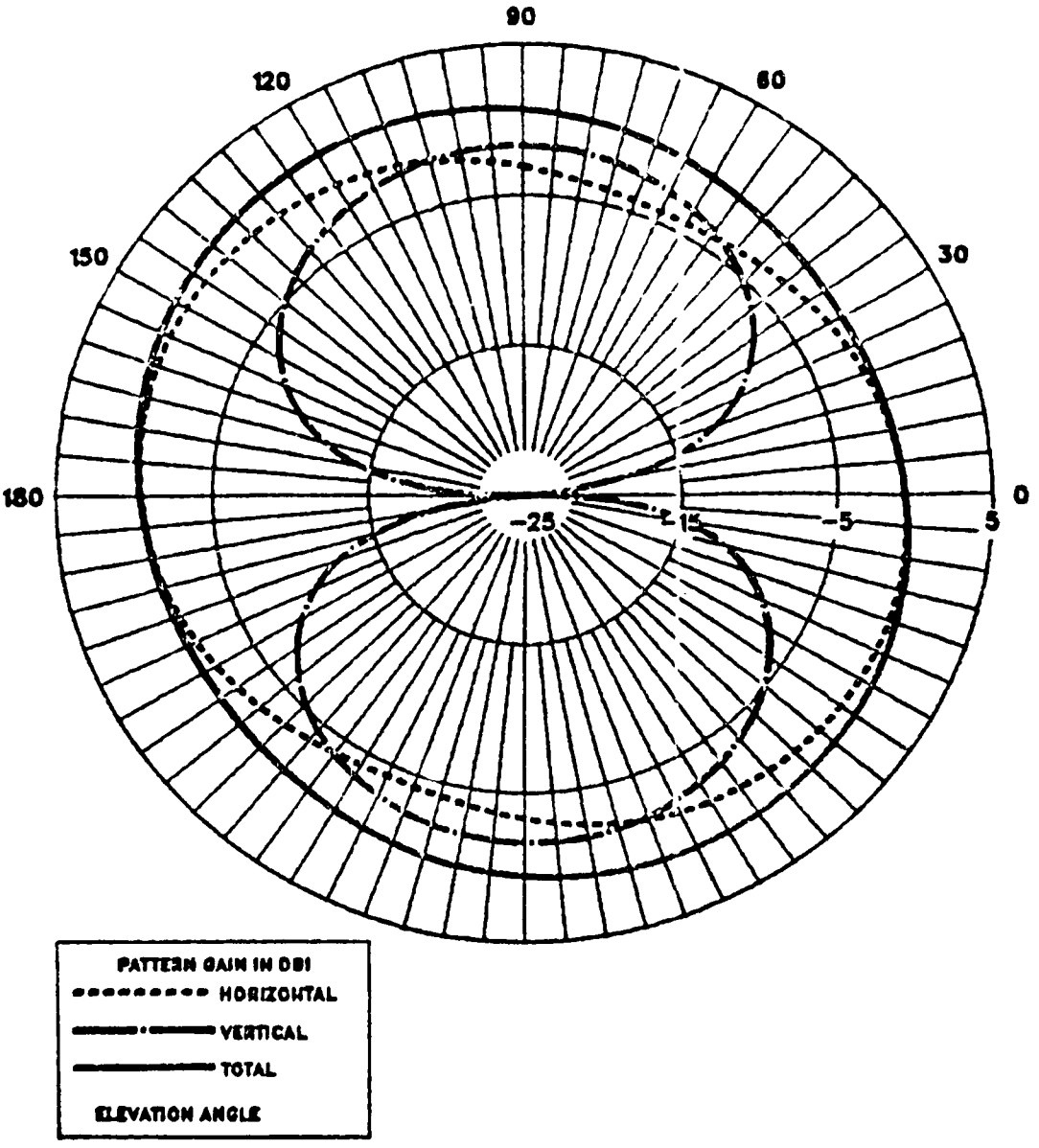

H65 IGUANA DATA RUN AT 5.696MHZ ON 8/20/87

LONG-WIRE ANT, FREE SPACE, HORIZ CUT, THETA=90

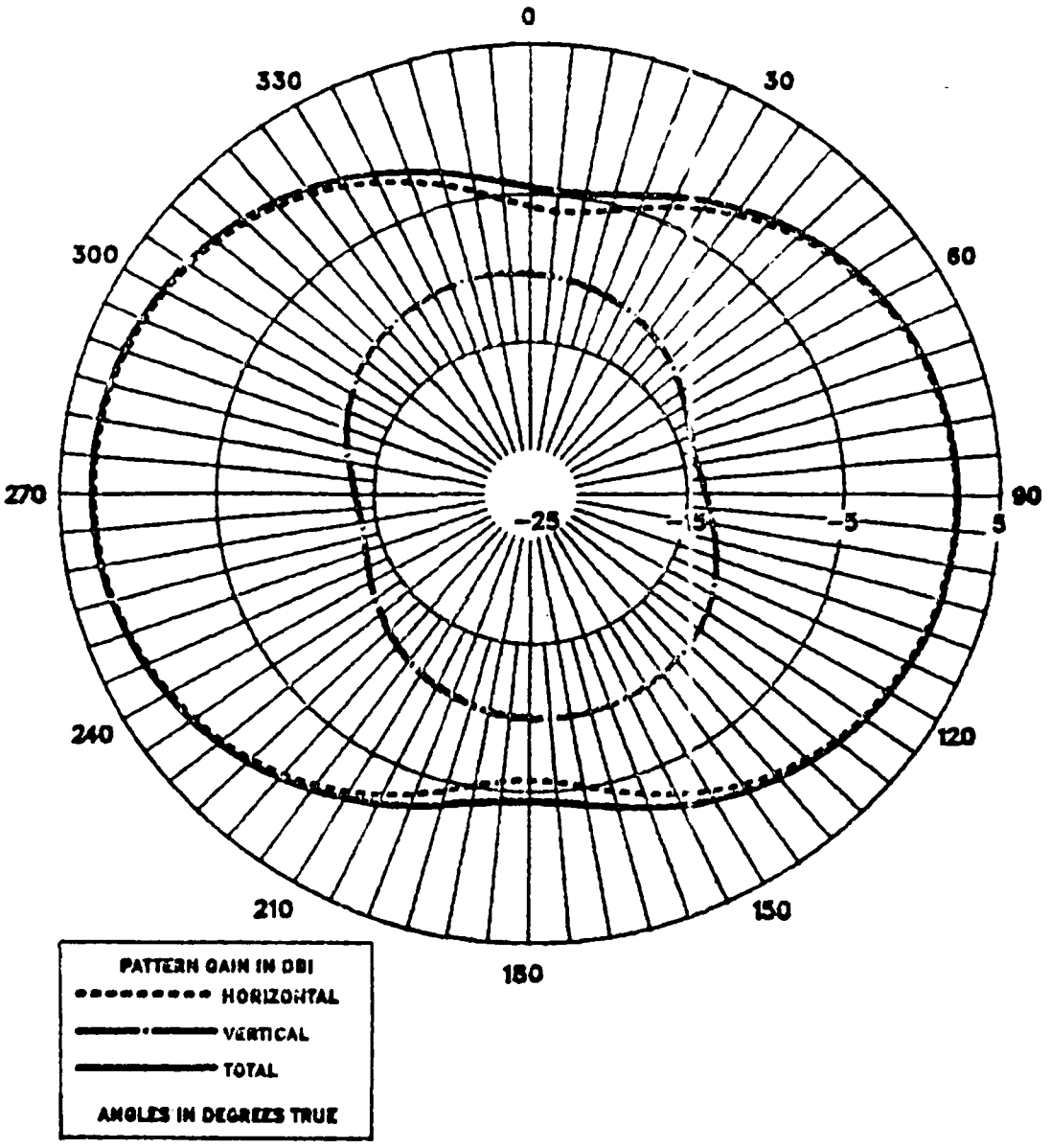

H65 IGUANA DATA RUN AT 5.696MHZ ON 8/20/87

LONG-WIRE ANT, FREE SPACE, HORIZ CUT, THETA=26

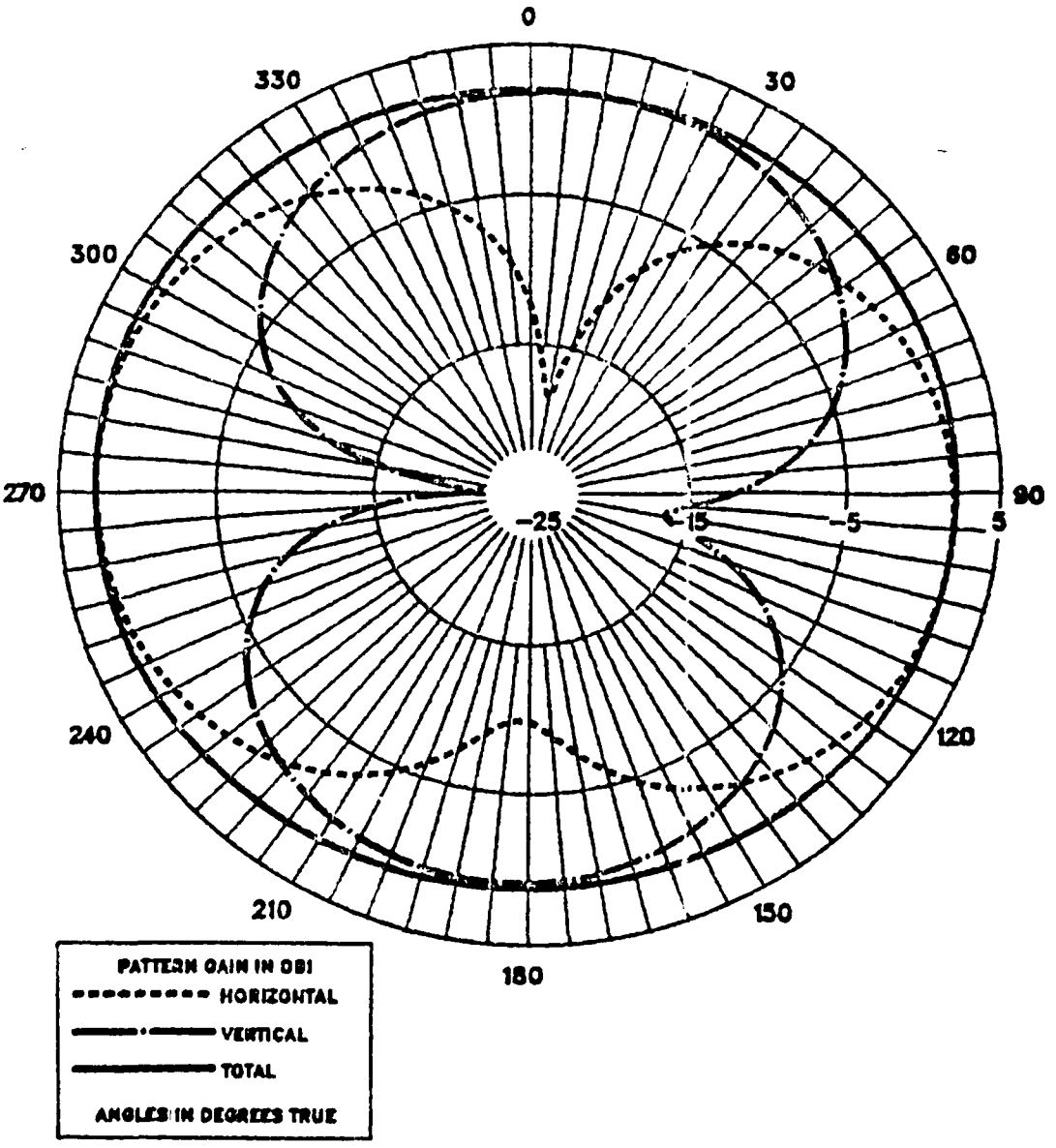

H65 IGUANA DATA RUN AT 5.696MHZ ON 8/20/87

LONG-WIRE ANT, FREE SPACE, VERT CUT, PHI=0

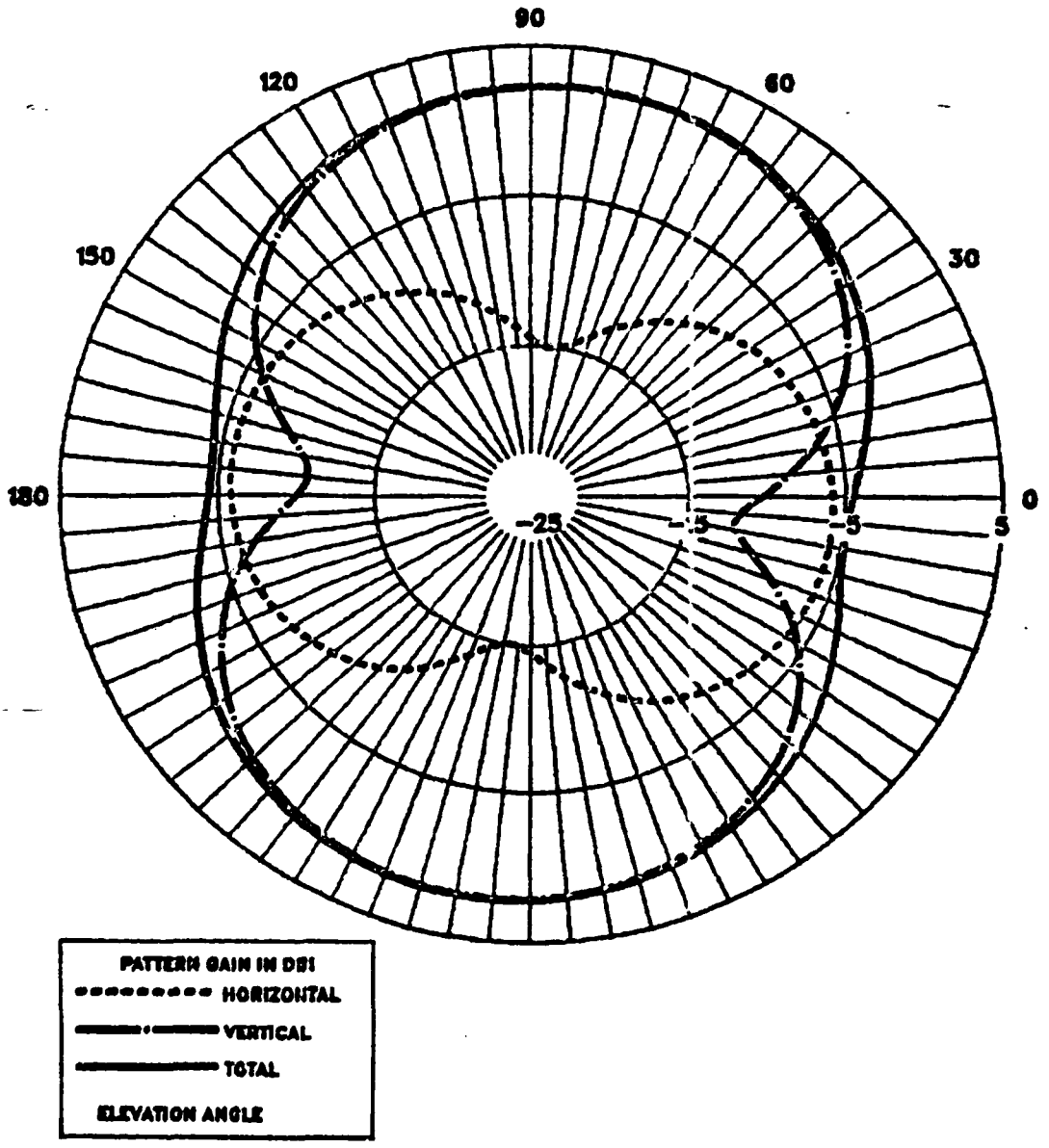

H65 IGUANA DATA RUN AT 5.696MHZ ON 8/20/87

LONG-WIRE ANT, FREE SPACE, VERT CUT, PHI=45

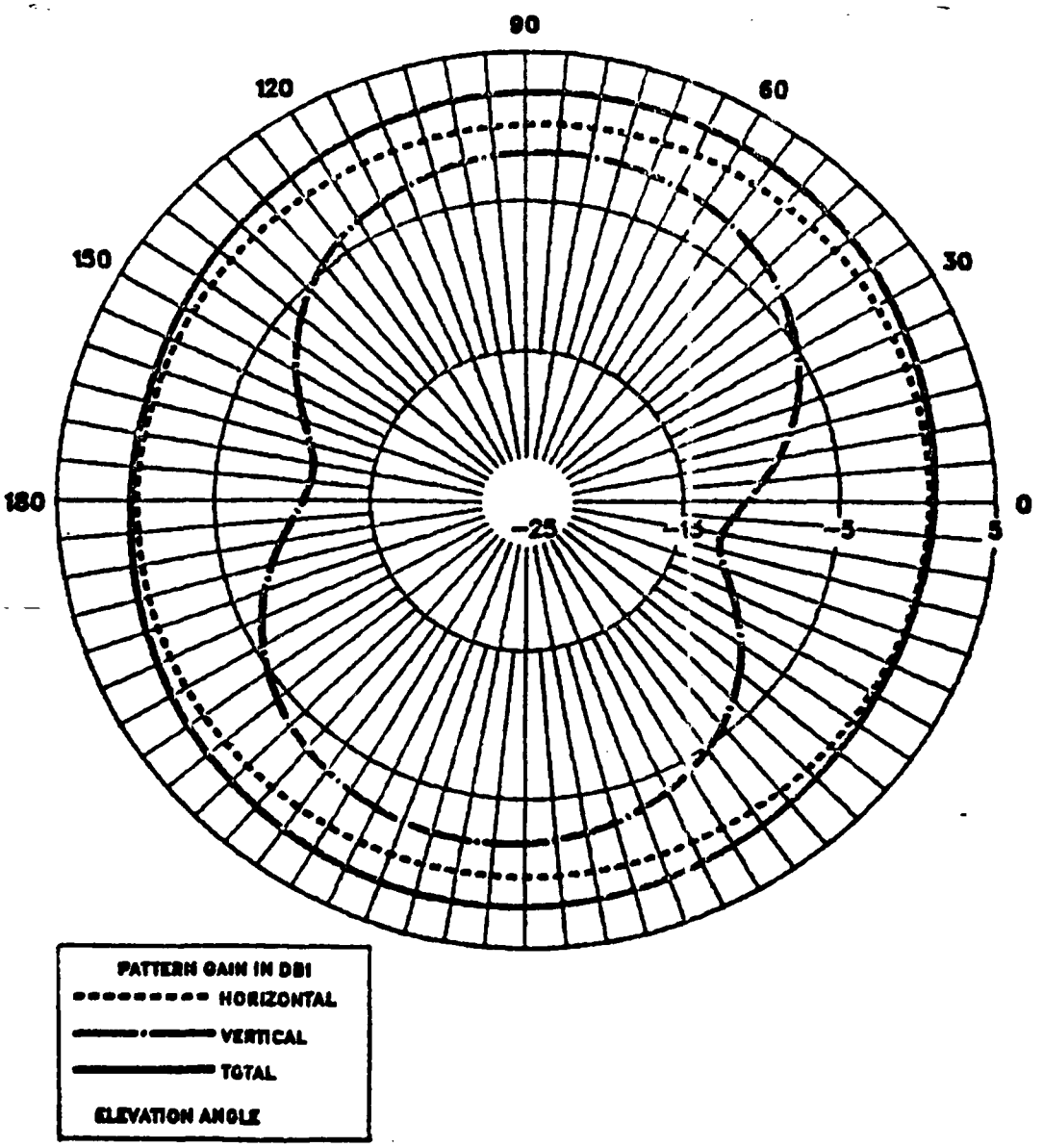

H65 IGUANA DATA RUN AT 5.696MHZ ON 8/20/87

COLLINS 437R-2, FREE SPACE, HORIZ CUT, THETA=90

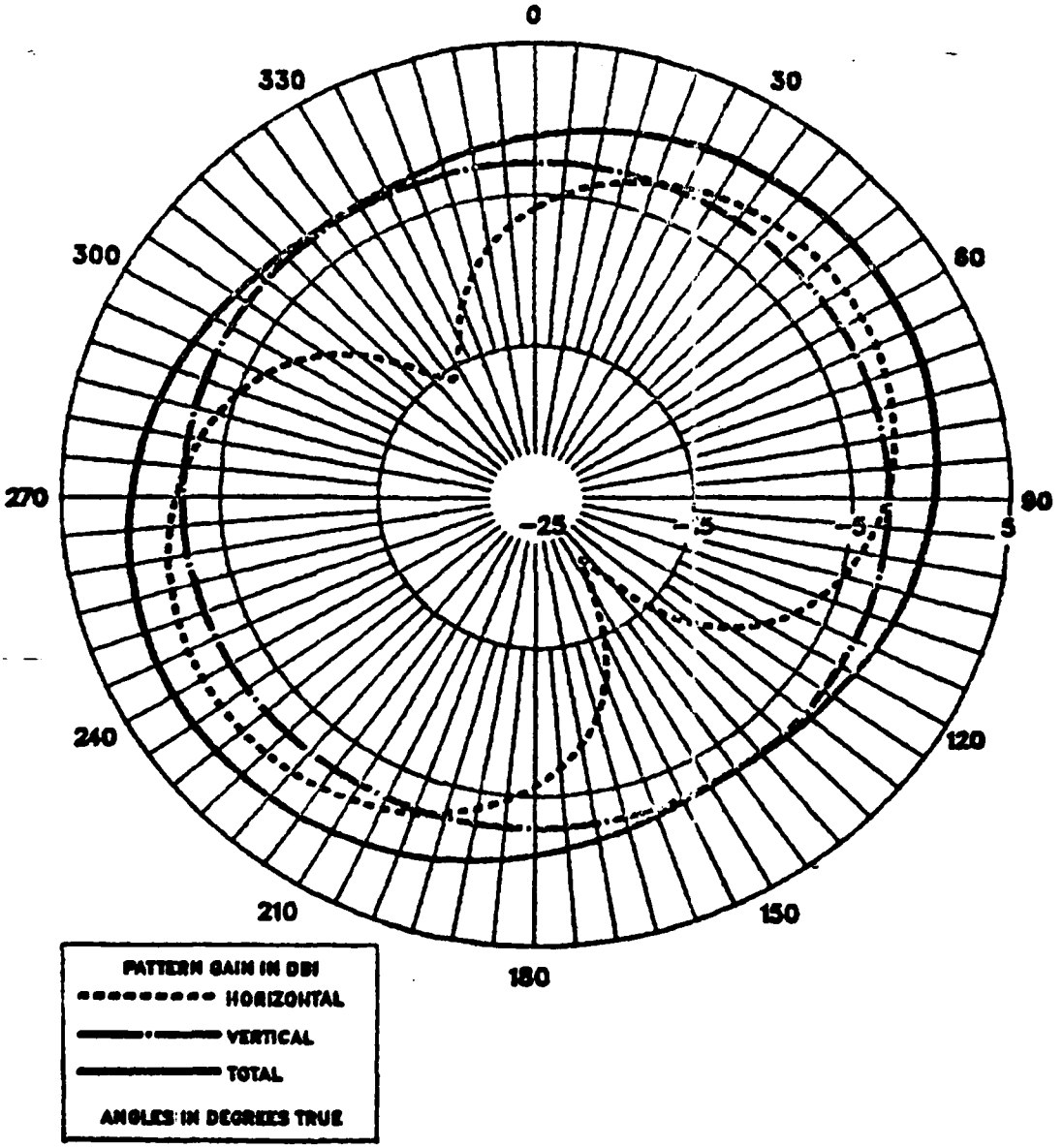

H65 IGUANA DATA RUN AT 5.696MHZ ON 8/20/87

COLLINS 437R-2, FREE SPACE, HORIZ CUT, THETA=26

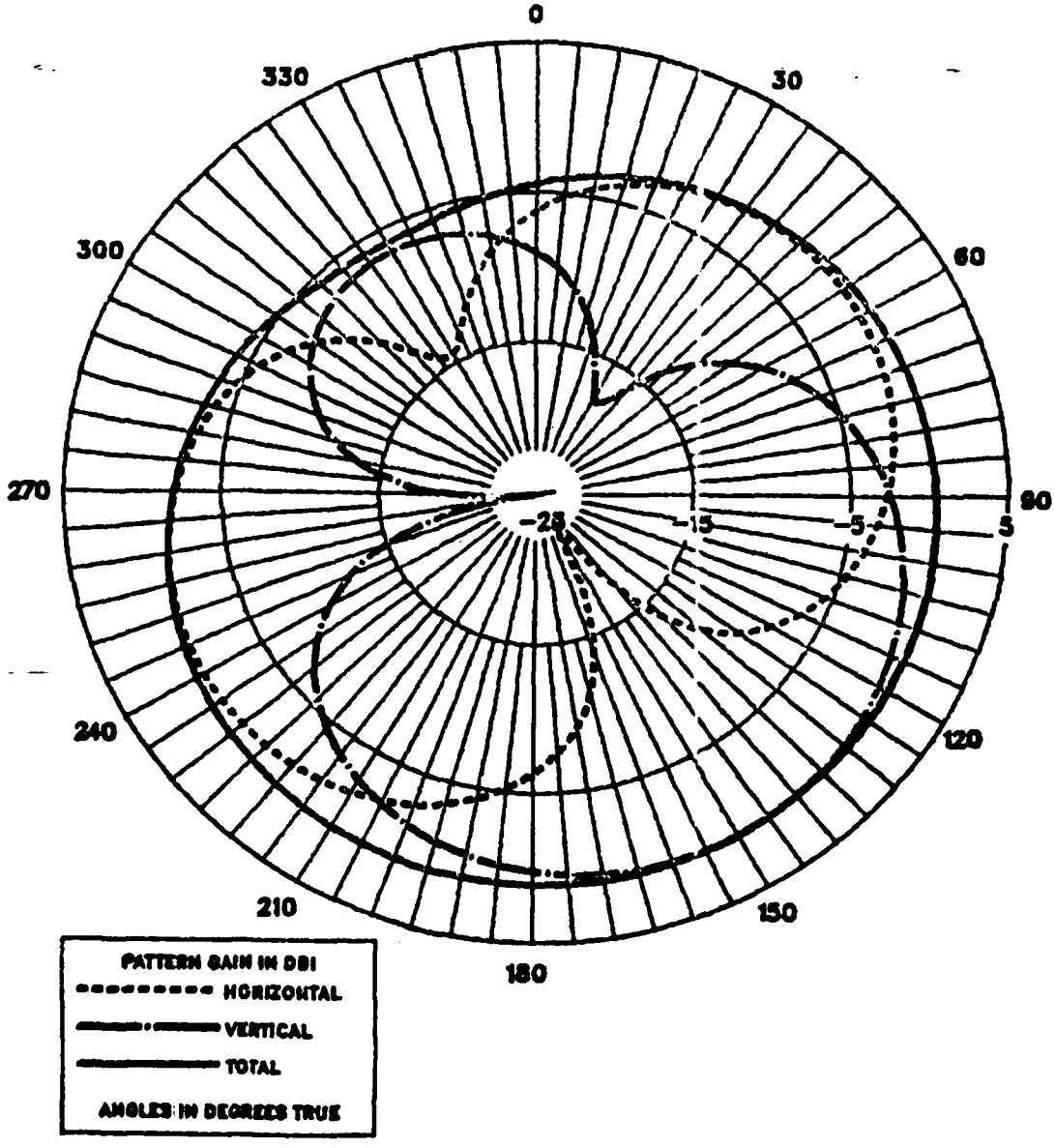

H65 IGUANA DATA RUN AT 5.696MHZ ON 8/20/87

COLLINS 437R-2, FREE SPACE, VERT CUT, PHI=0

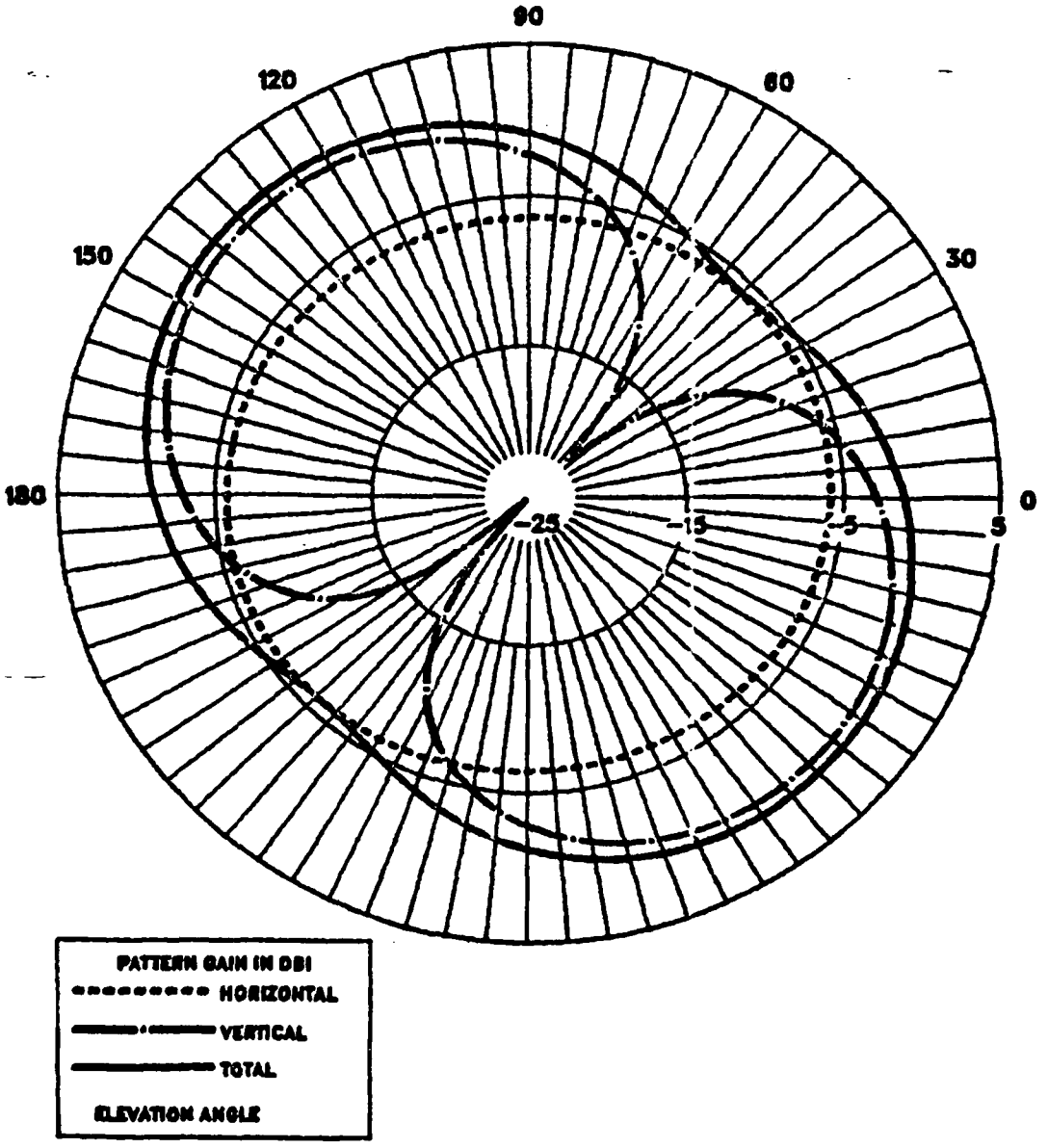

H65 IGUANA DATA RUN AT 5.696MHZ ON 8/20/87

COLLINS 437R-2, FREE SPACE, VERT CUT, PHI=45

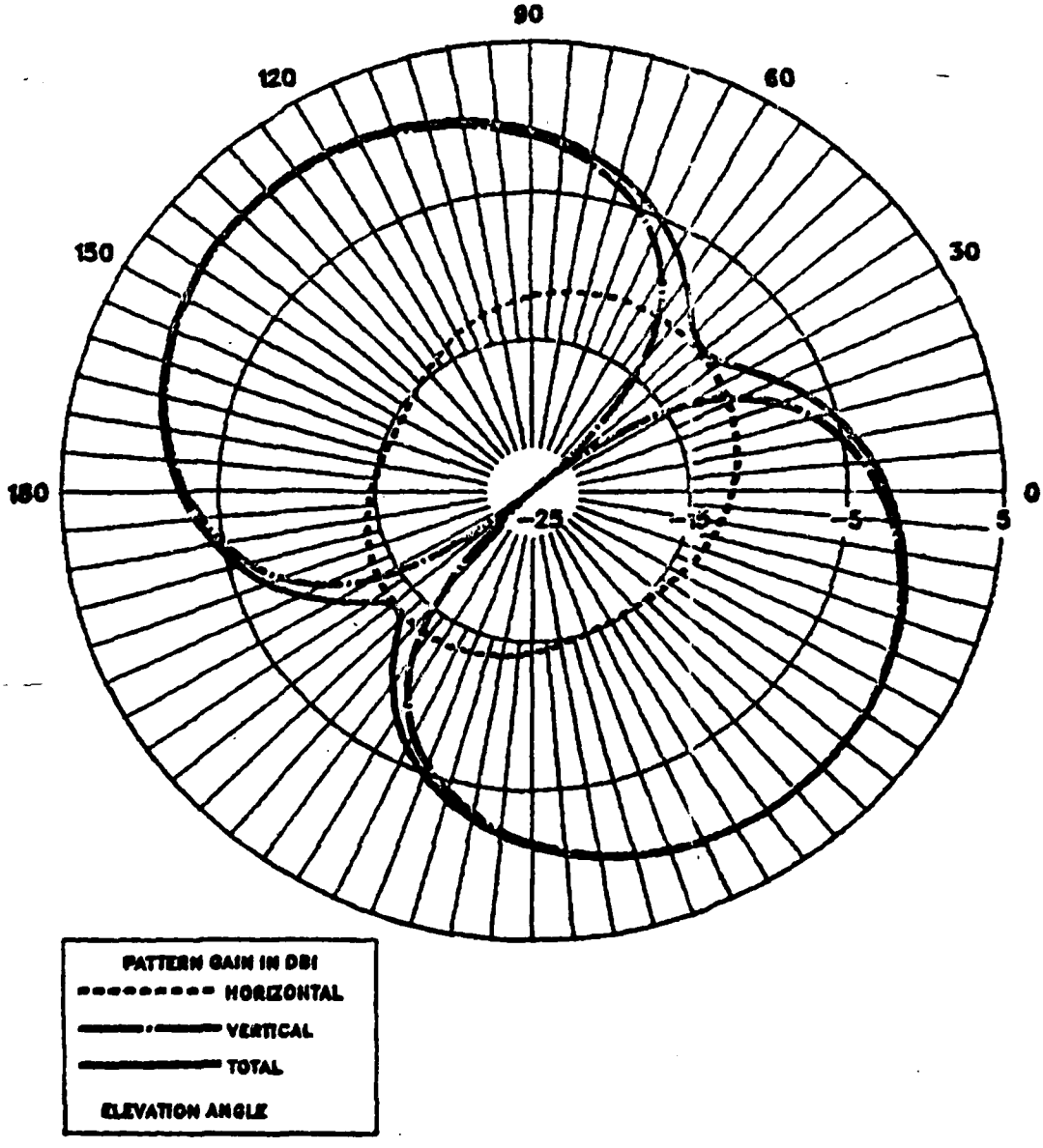

H65 IGUANA DATA RUN AT 5.696MHZ ON 8/20/87

ARMY-TYPE TUBE ANT, FREE SPACE, HORIZ CUT, THETA=90

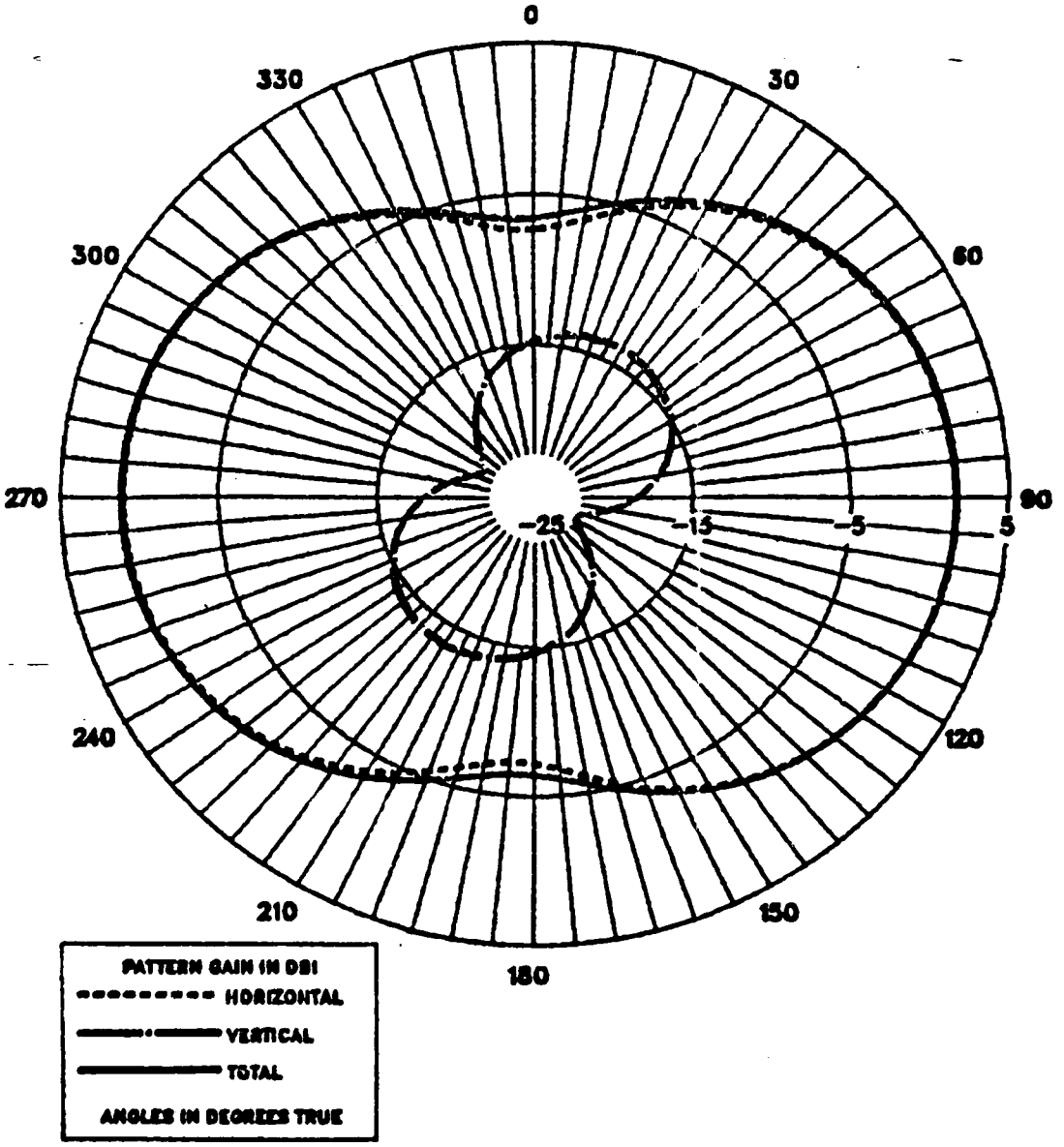

H65 IGUANA DATA RUN AT 5.696MHZ ON 8/20/87

ARMY–TYPE TUBE ANT, FREE SPACE, HORIZ CUT, THETA=26

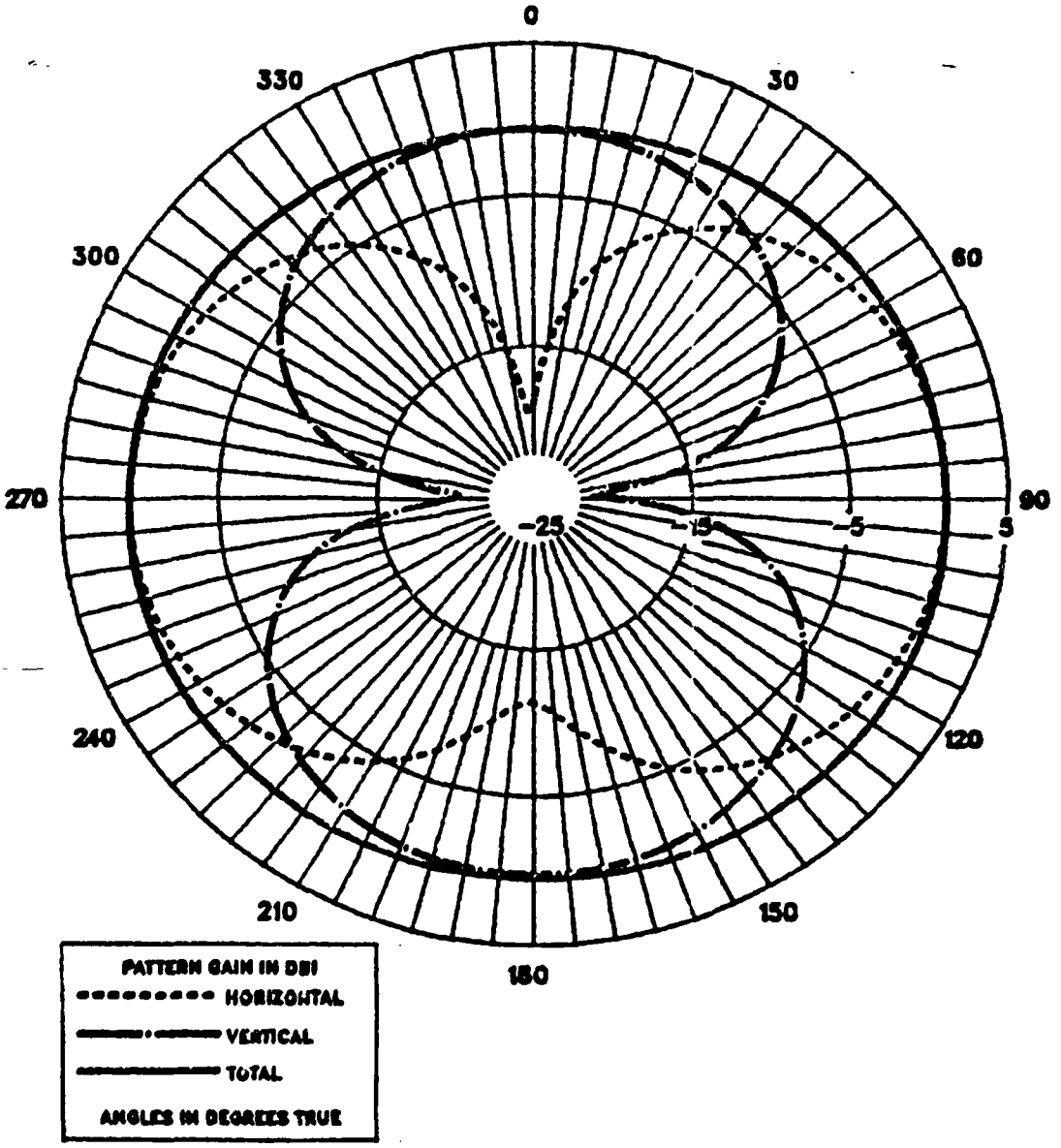

H65 IGUANA DATA RUN AT 5.696MHZ ON 8/20/87

ARMY-TYPE TUBE ANT, FREE SPACE, VERT CUT, PHI=0

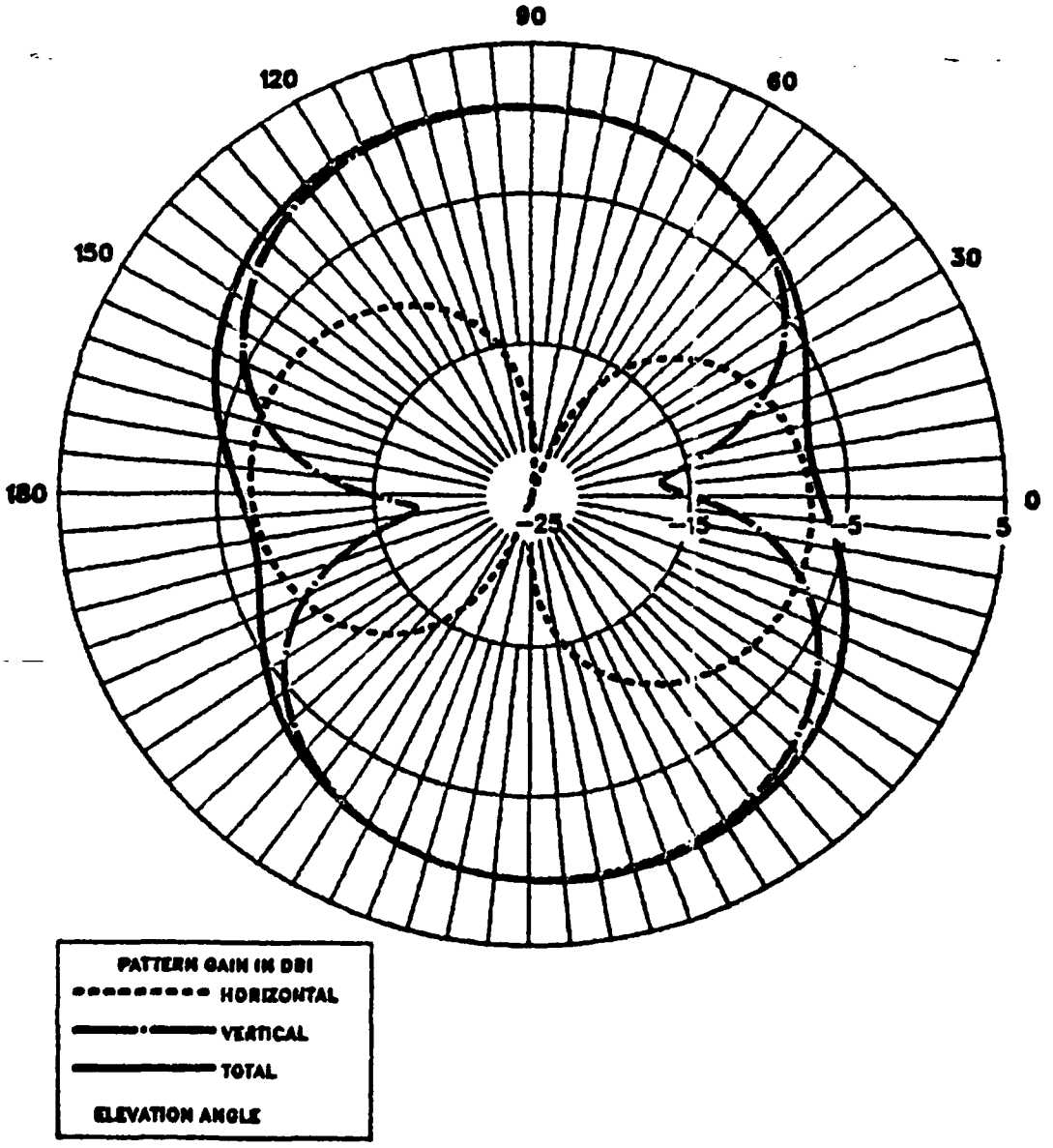

H65 IGUANA DATA RUN AT 5.696MHZ ON 8/20/87

ARMY-TYPE TUBE ANT, FREE SPACE, VERT CUT, PHI=45

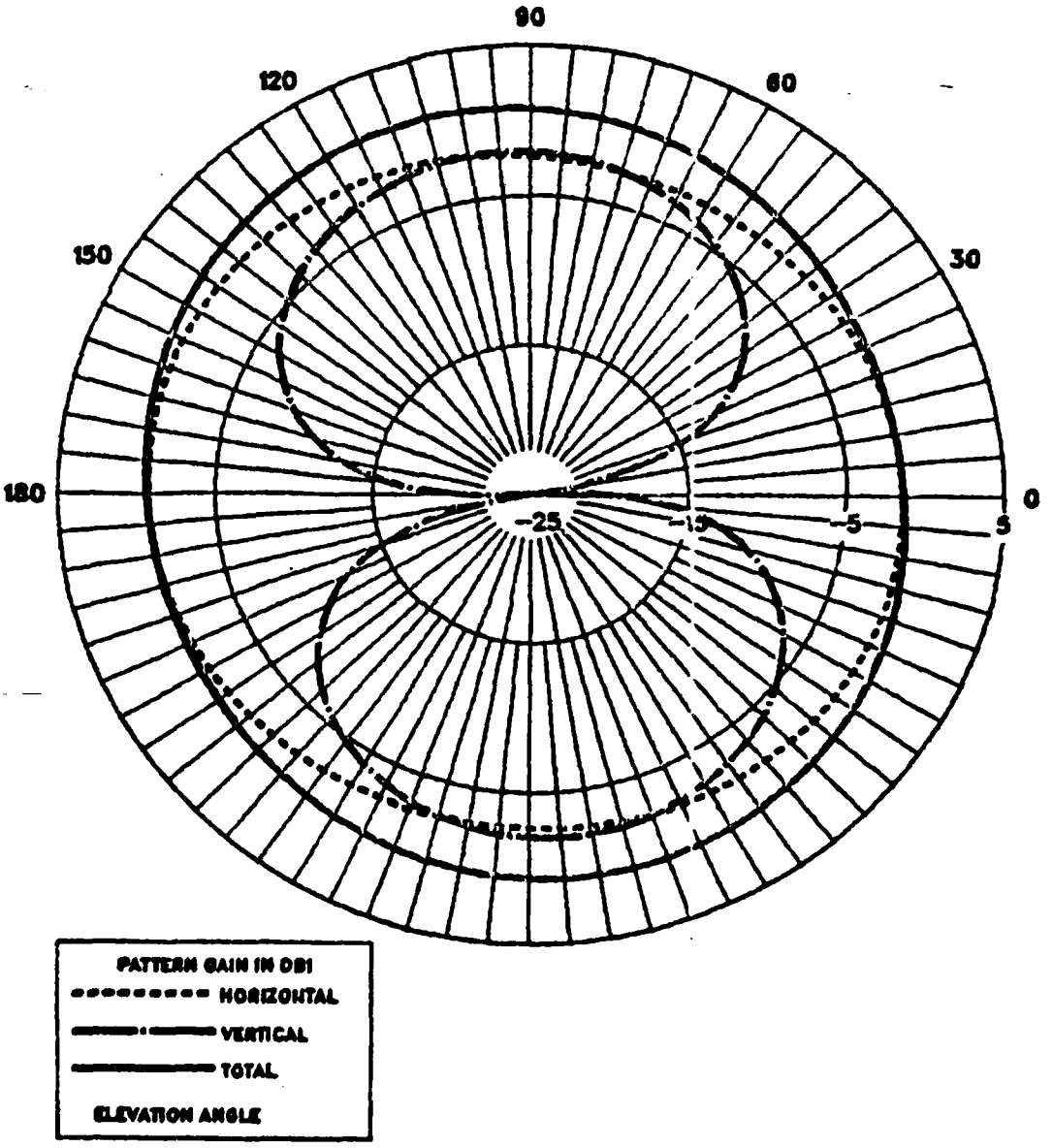

H65 IGUANA DATA RUN AT 5.696MHZ ON 8/20/87

LONG SHUNTED LOOP, FREE SPACE, HORIZ CUT, THETA=90

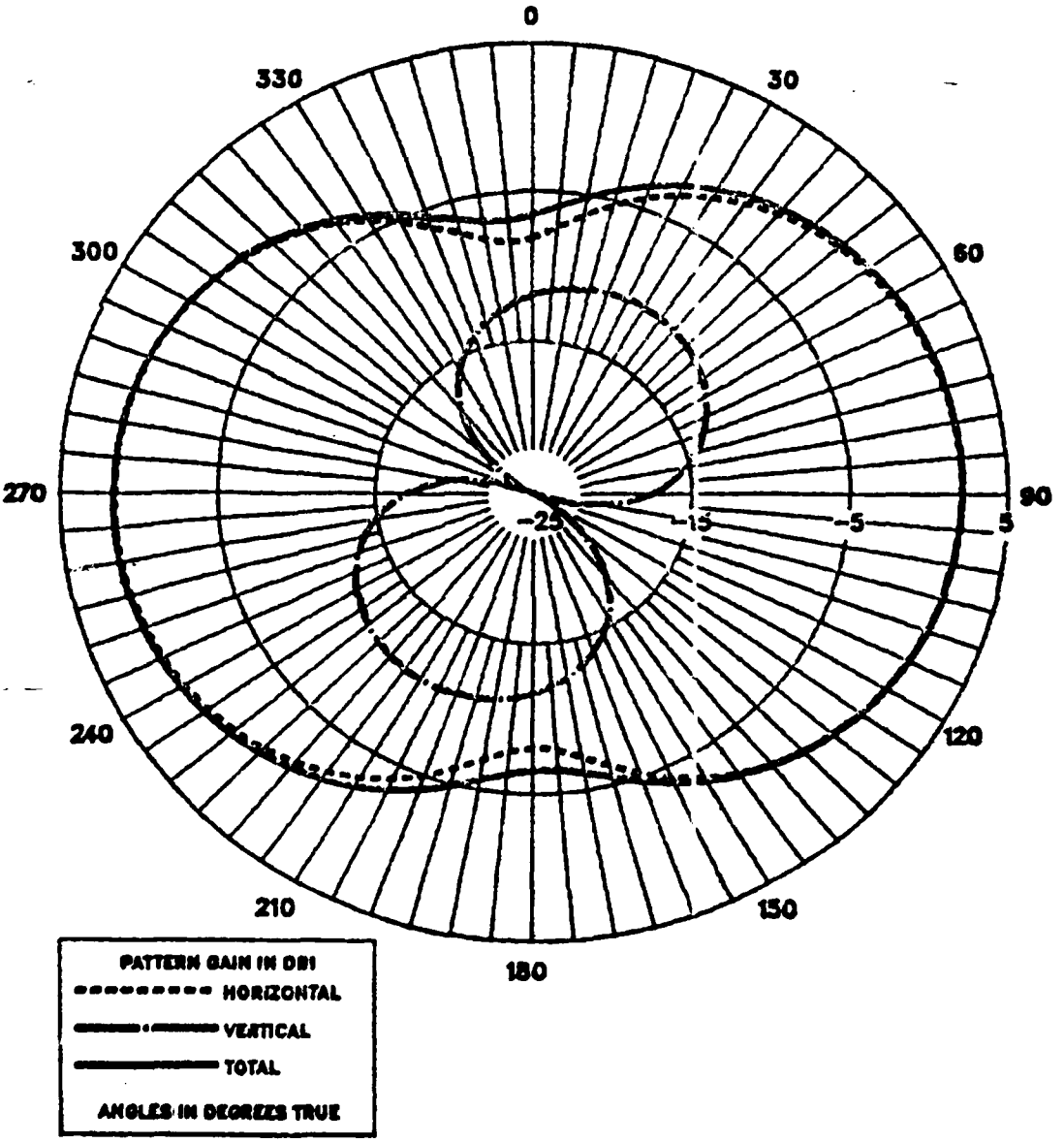

H65 IGUANA DATA RUN AT 5.696MHZ ON 8/20/87

LONG SHUNTED LOOP, FREE SPACE, HORIZ CUT, THETA=26

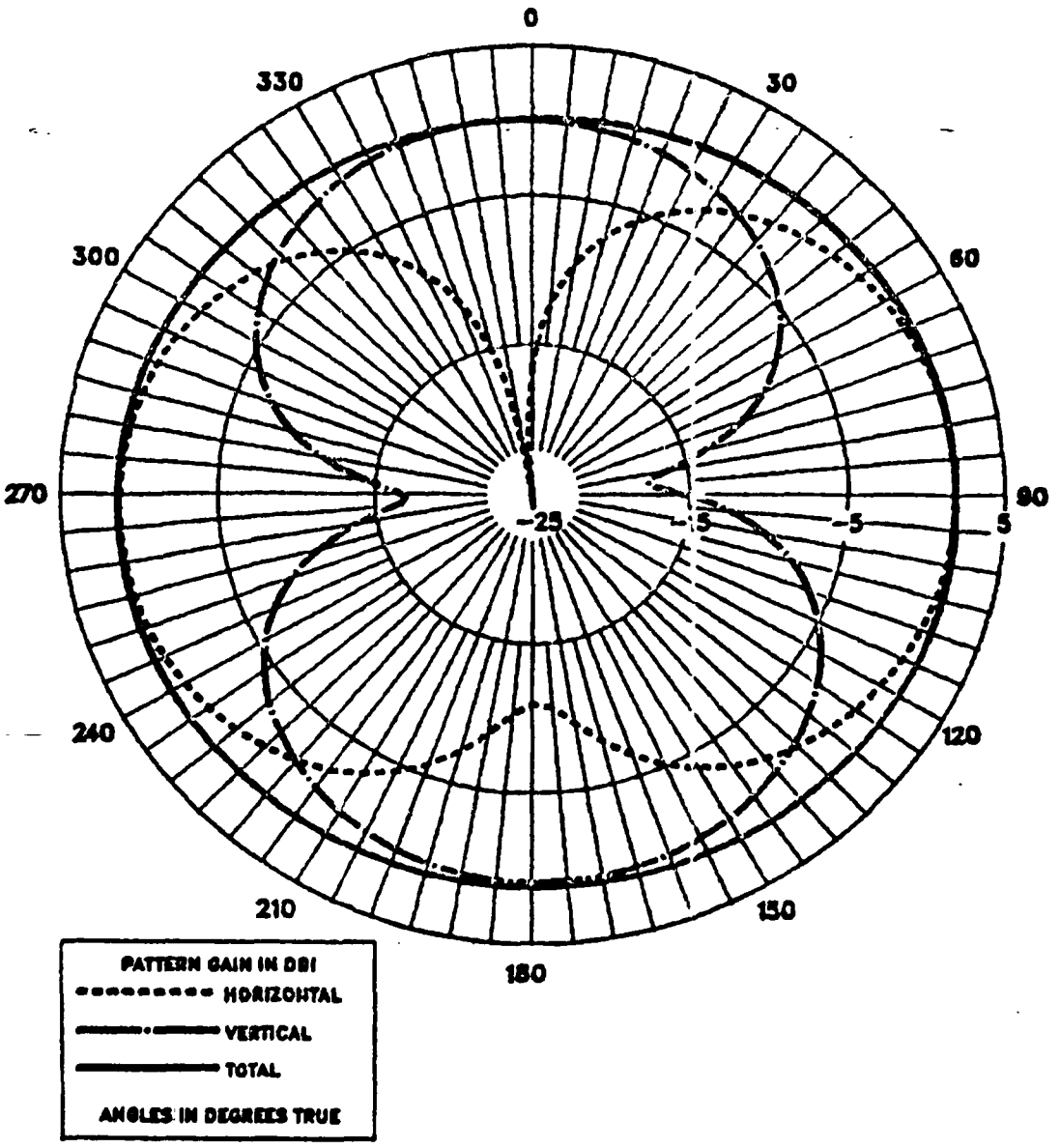

H65 IGUANA DATA RUN AT 5.696MHZ ON 8/20/87

LONG SHUNTED LOOP, FREE SPACE, VERT CUT, PHI=0

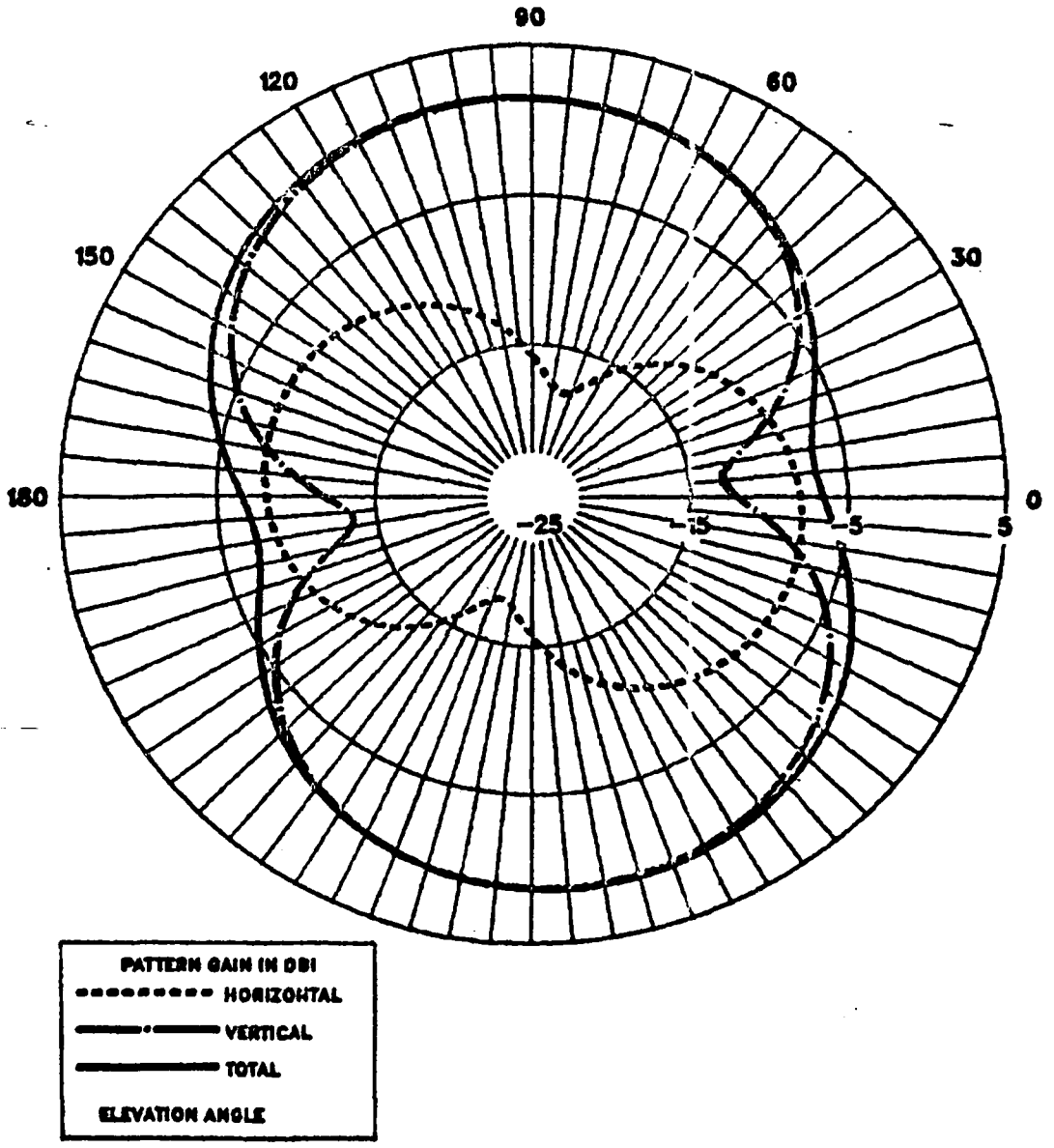

H65 IGUANA DATA RUN AT 5.696MHZ ON 8/20/87

LONG SHUNTED LOOP, FREE SPACE, VERT CUT, PHI=45

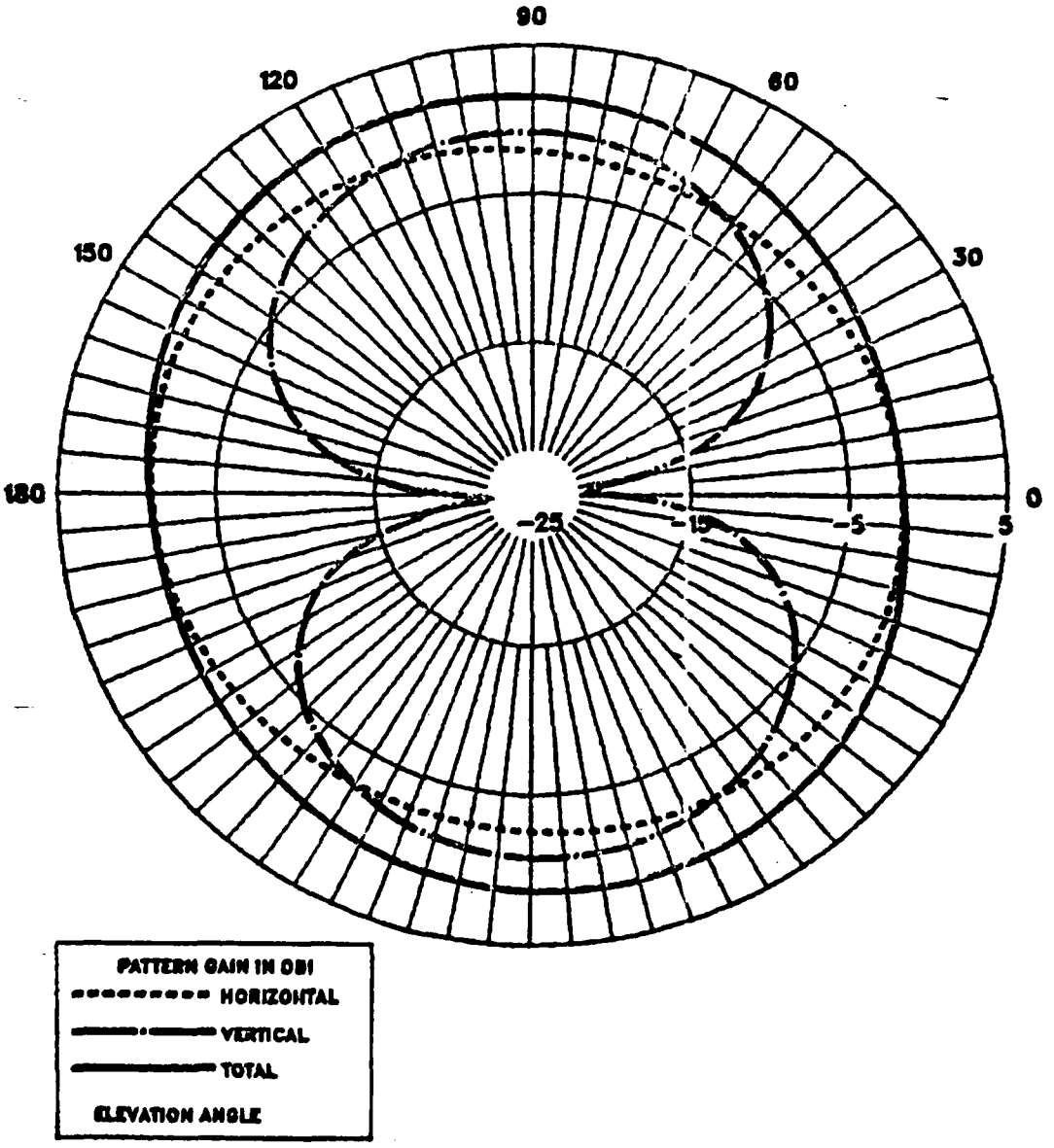

H65 IGUANA DATA RUN AT 7.645MHZ ON 8/22/87

LONG-WIRE ANT, FREE SPACE, HORIZ CUT, THETA=90

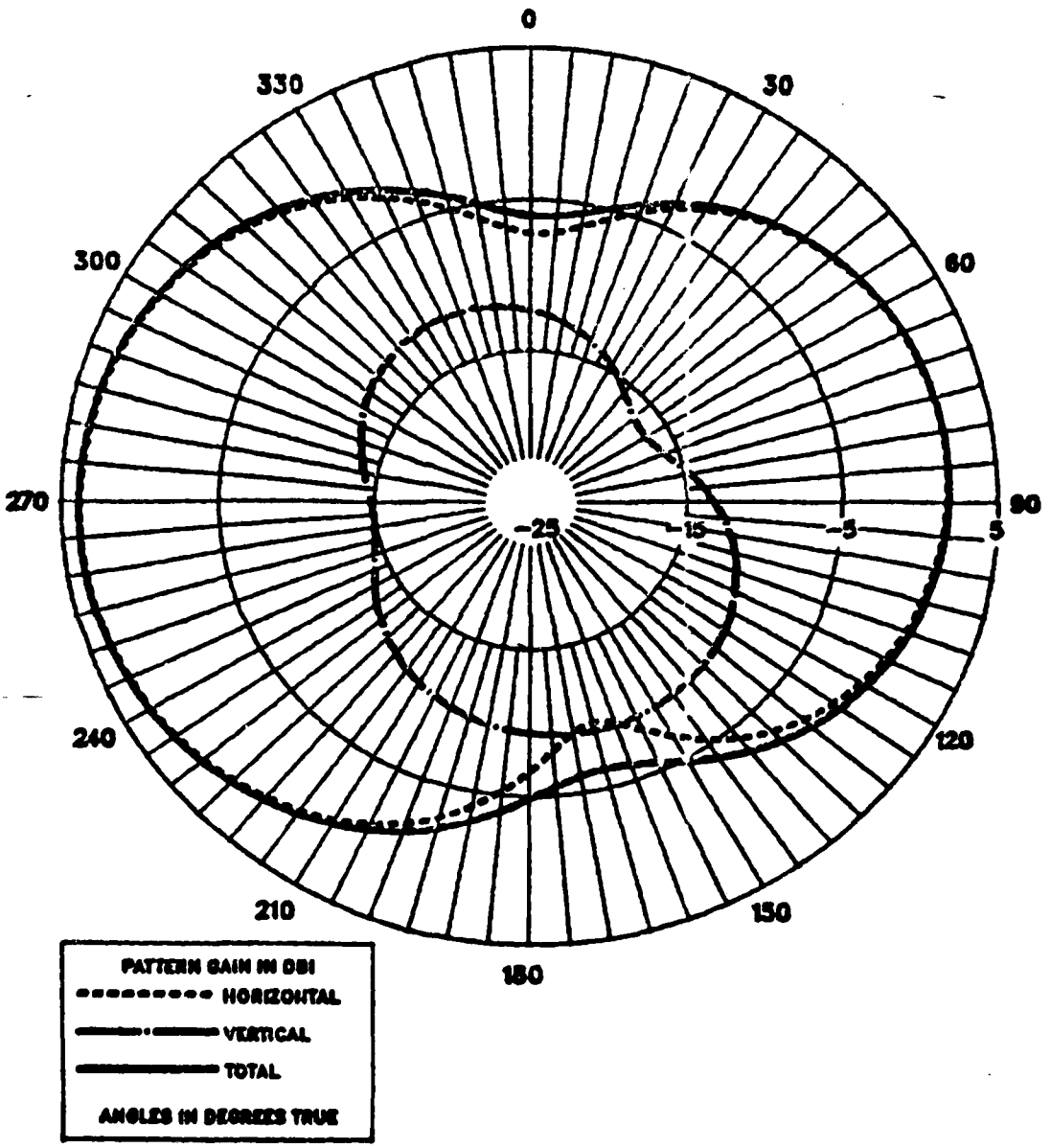

H65 IGUANA DATA RUN AT 7.645MHZ ON 8/22/87

LONG-WIRE ANT, FREE SPACE, HORIZ CUT, THETA=26

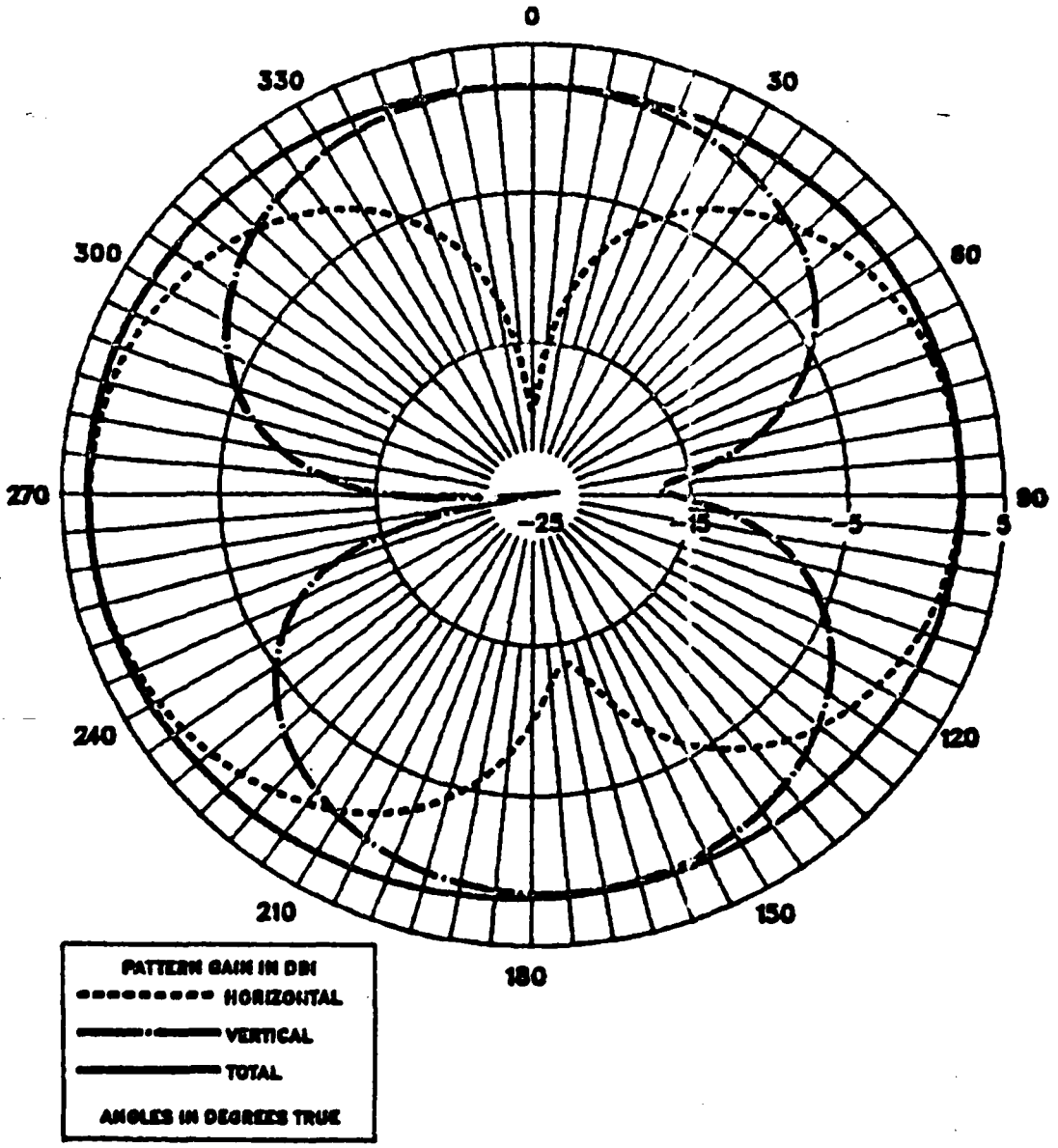

H65 IGUANA DATA RUN AT 7.645MHZ ON 8/22/87

LONG-WIRE ANT, FREE SPACE, VERT CUT, PHI=0

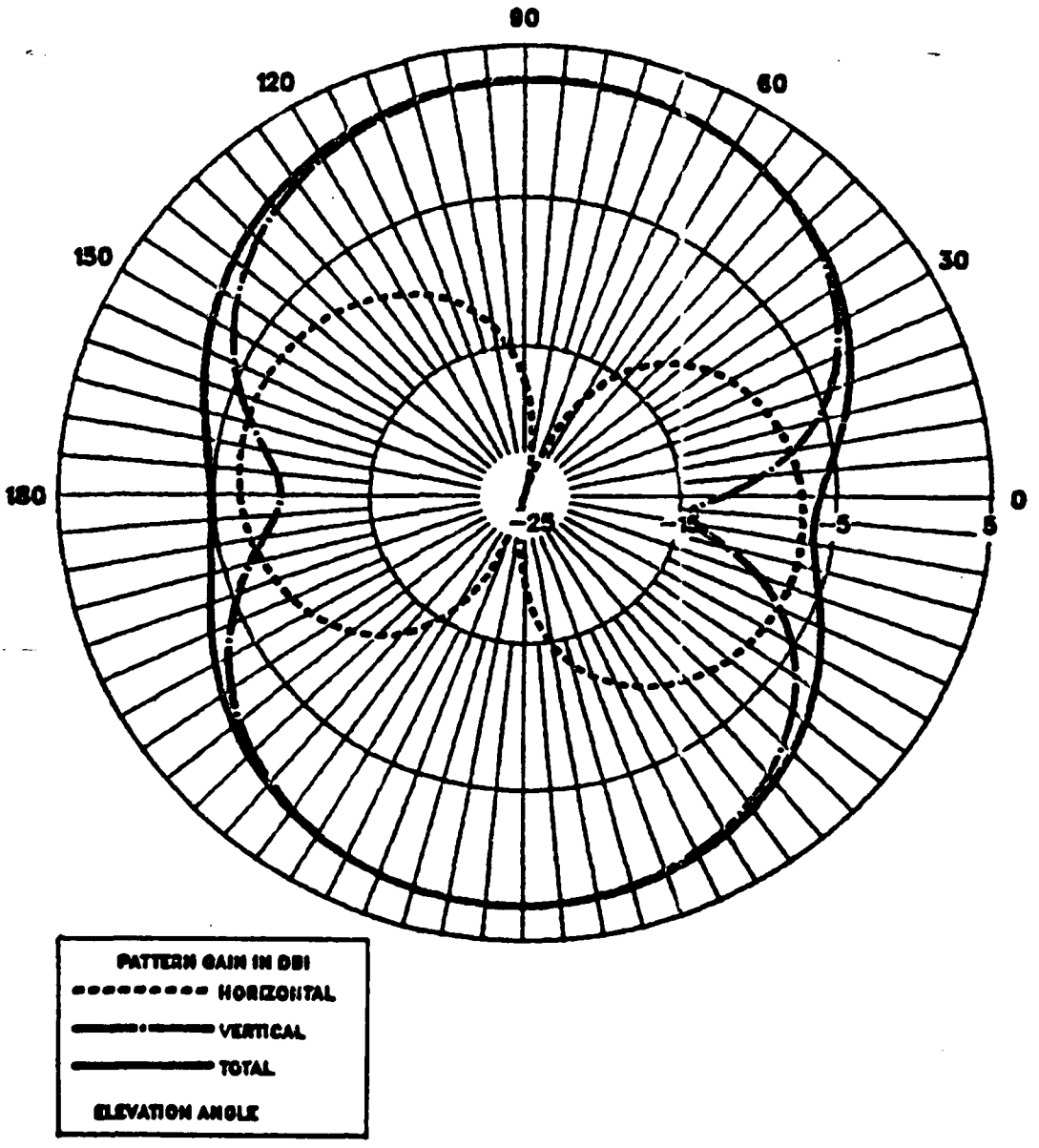

H65 IGUANA DATA RUN AT 7.645MHZ ON 8/22/87

LONG-WIRE ANT, FREE SPACE, VERT CUT, PHI=45

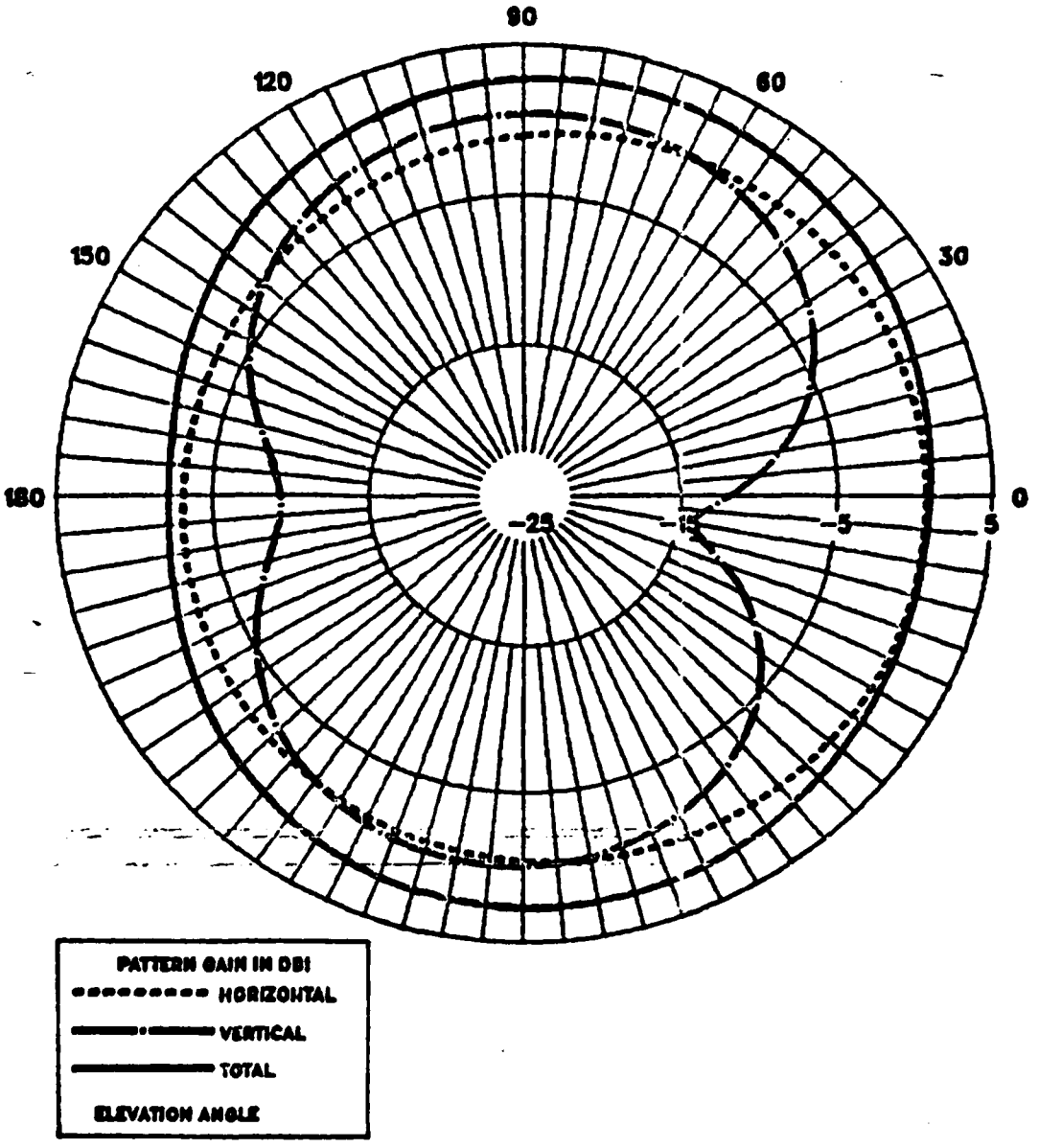

H65 IGUANA DATA RUN AT 7.645MHZ ON 8/22/87

COLLINS 437R-2 ANT, FREE SPACE, HORIZ CUT, THETA=90

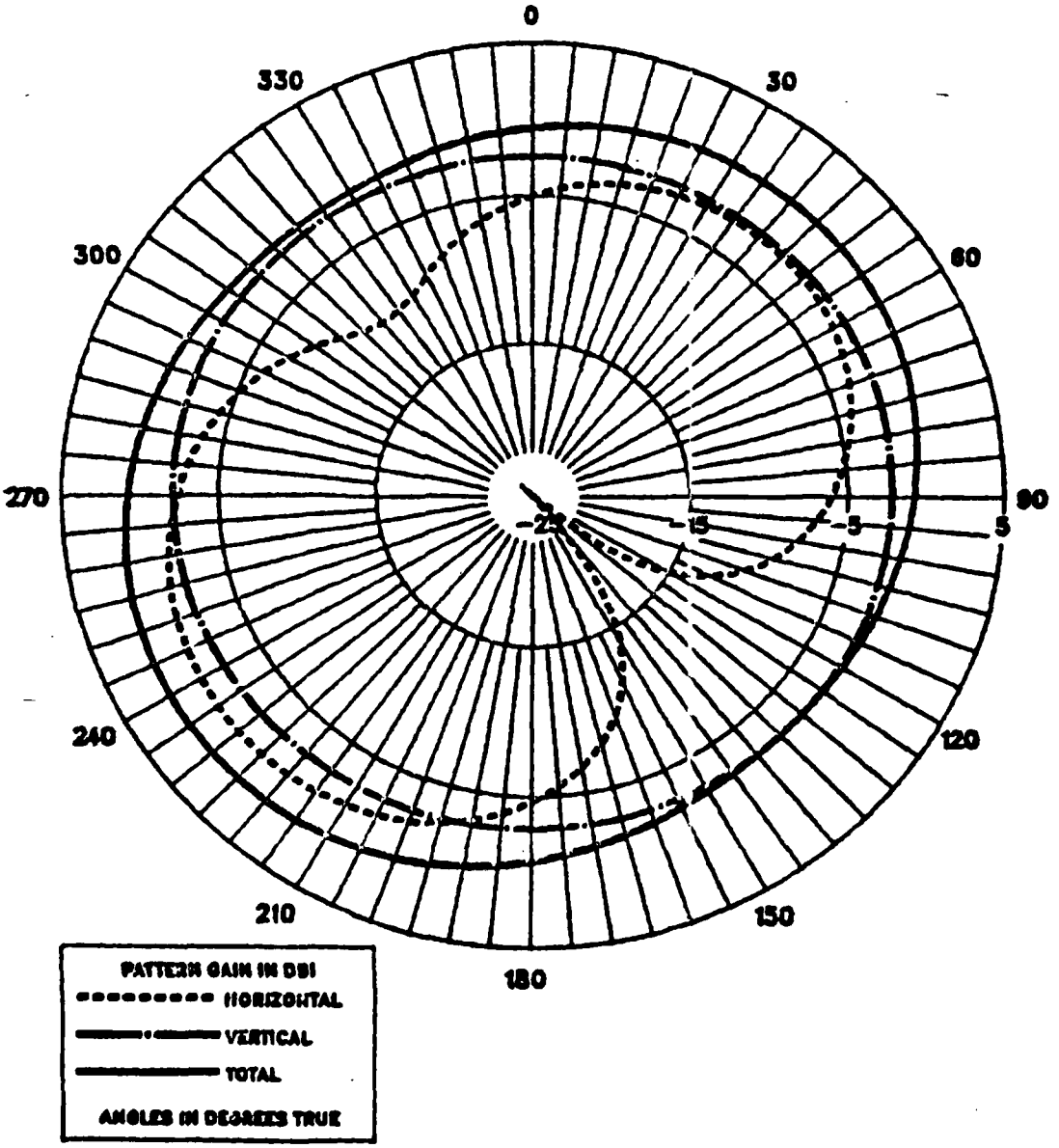

H65 IGUANA DATA RUN AT 7.645MHZ ON 8/22/87

COLLINS 437R-2 ANT, FREE SPACE, HORIZ CUT, THETA=26

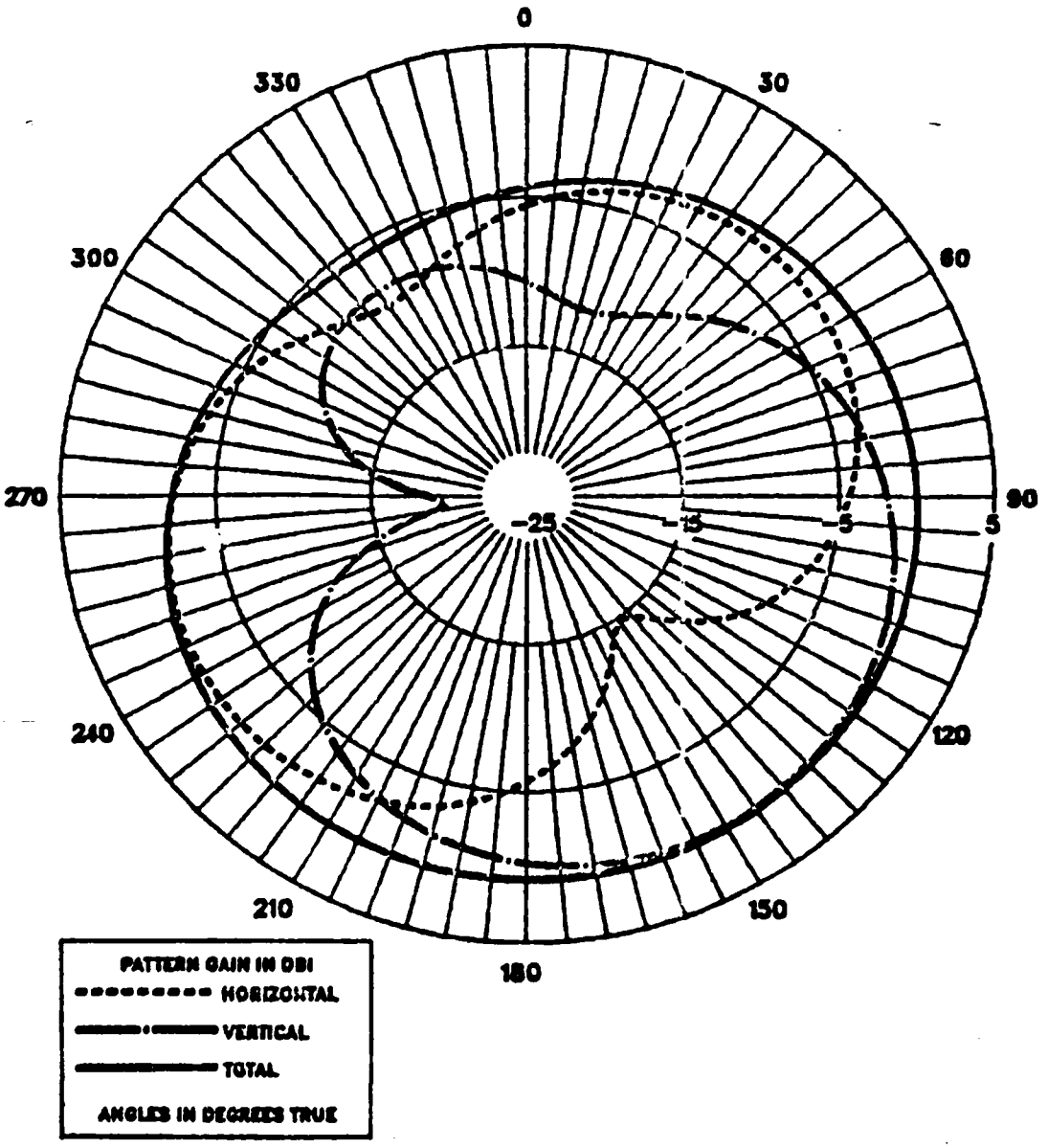

H65 IGUANA DATA RUN AT 7.645MHZ ON 8/22/87

COLLINS 437R-2 ANT, FREE SPACE, VERT CUT, PHI=0

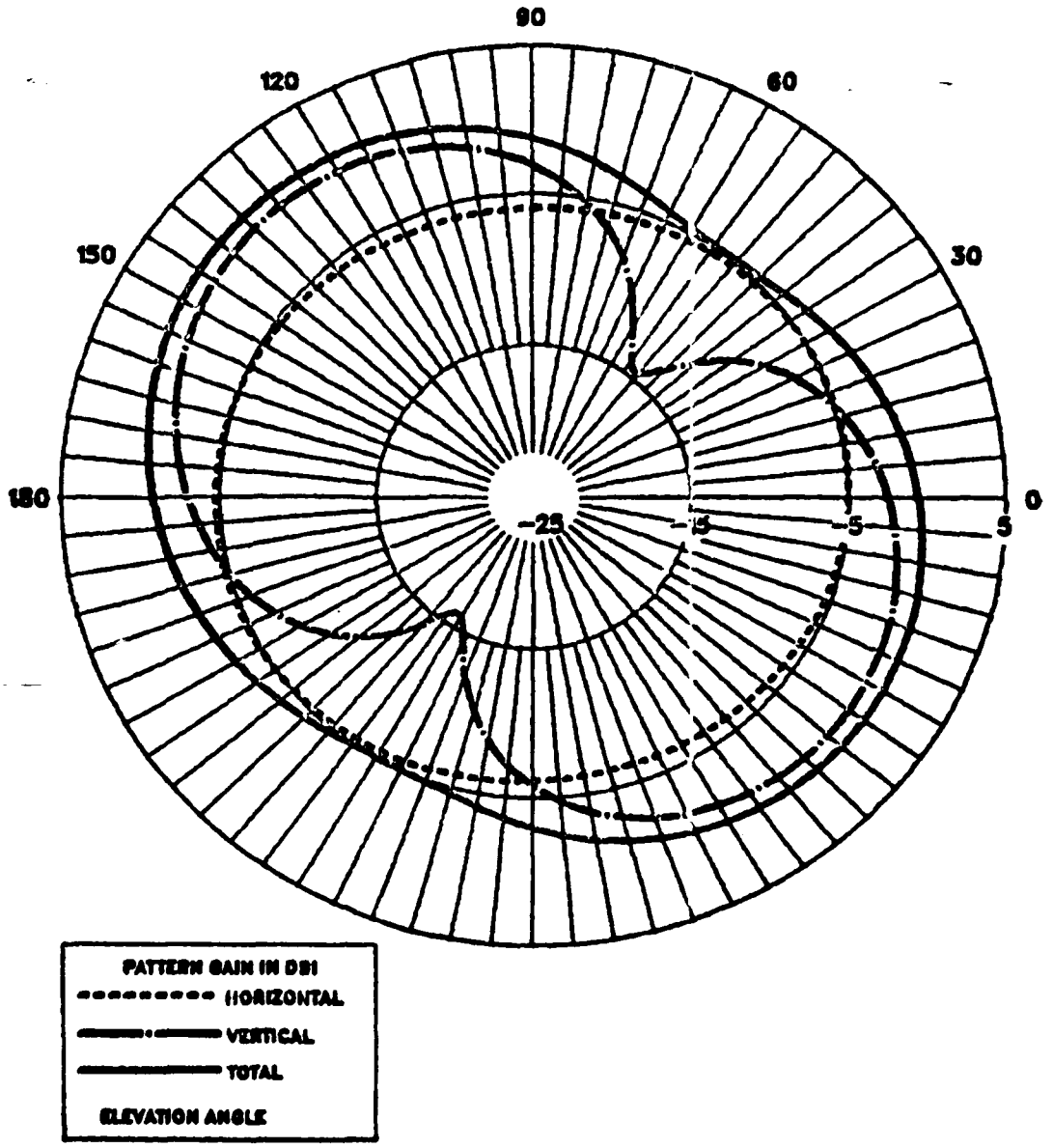

H65 IGUANA DATA RUN AT 7.645MHZ ON 8/22/87

COLLINS 437R-2 ANT, FREE SPACE, VERT CUT, PHI=45

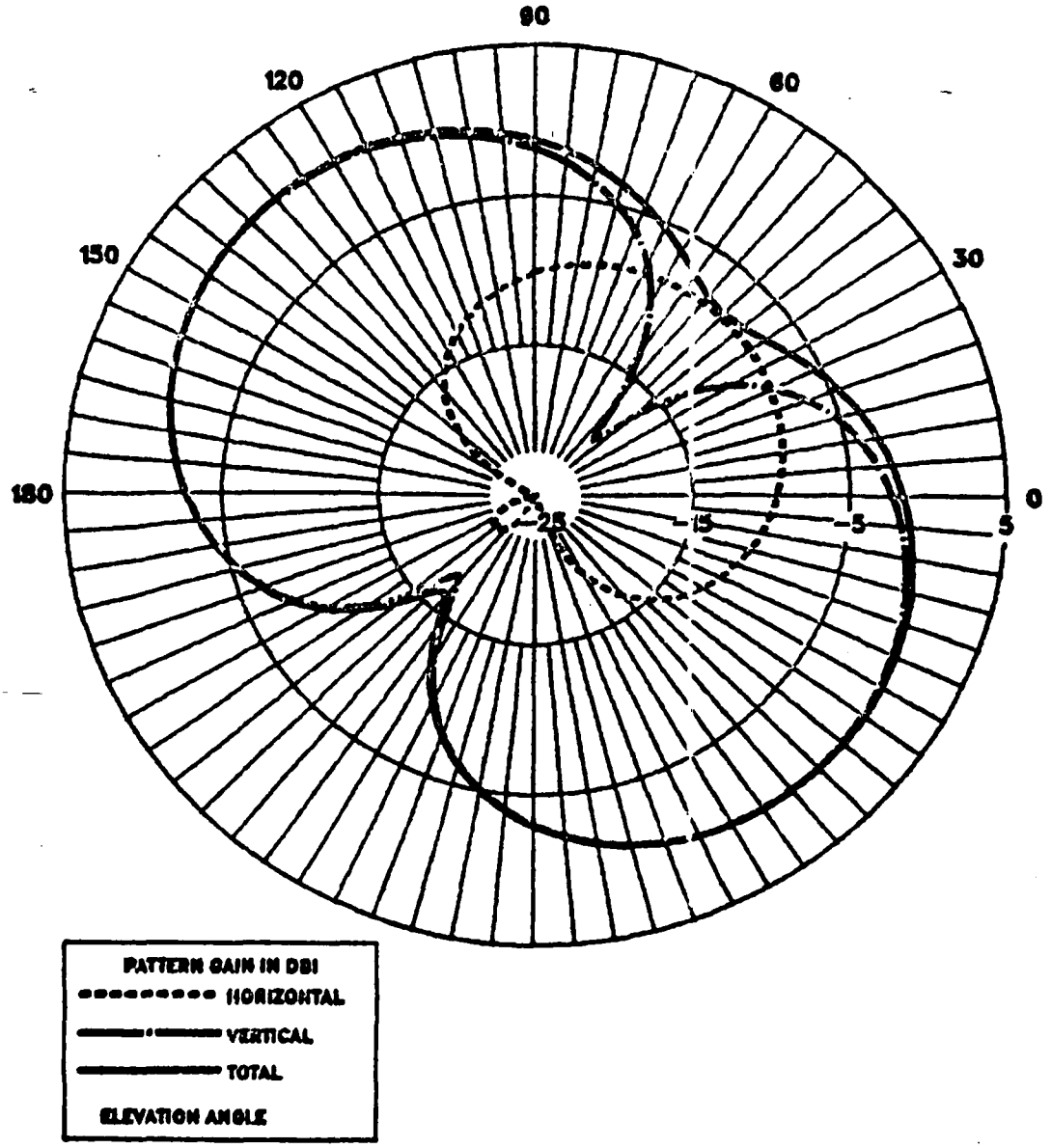

H65 IGUANA DATA RUN AT 7.645MHZ ON 8/22/87

ARMY–TYPE TUBE ANT, FREE SPACE, HORIZ CUT, THETA=90

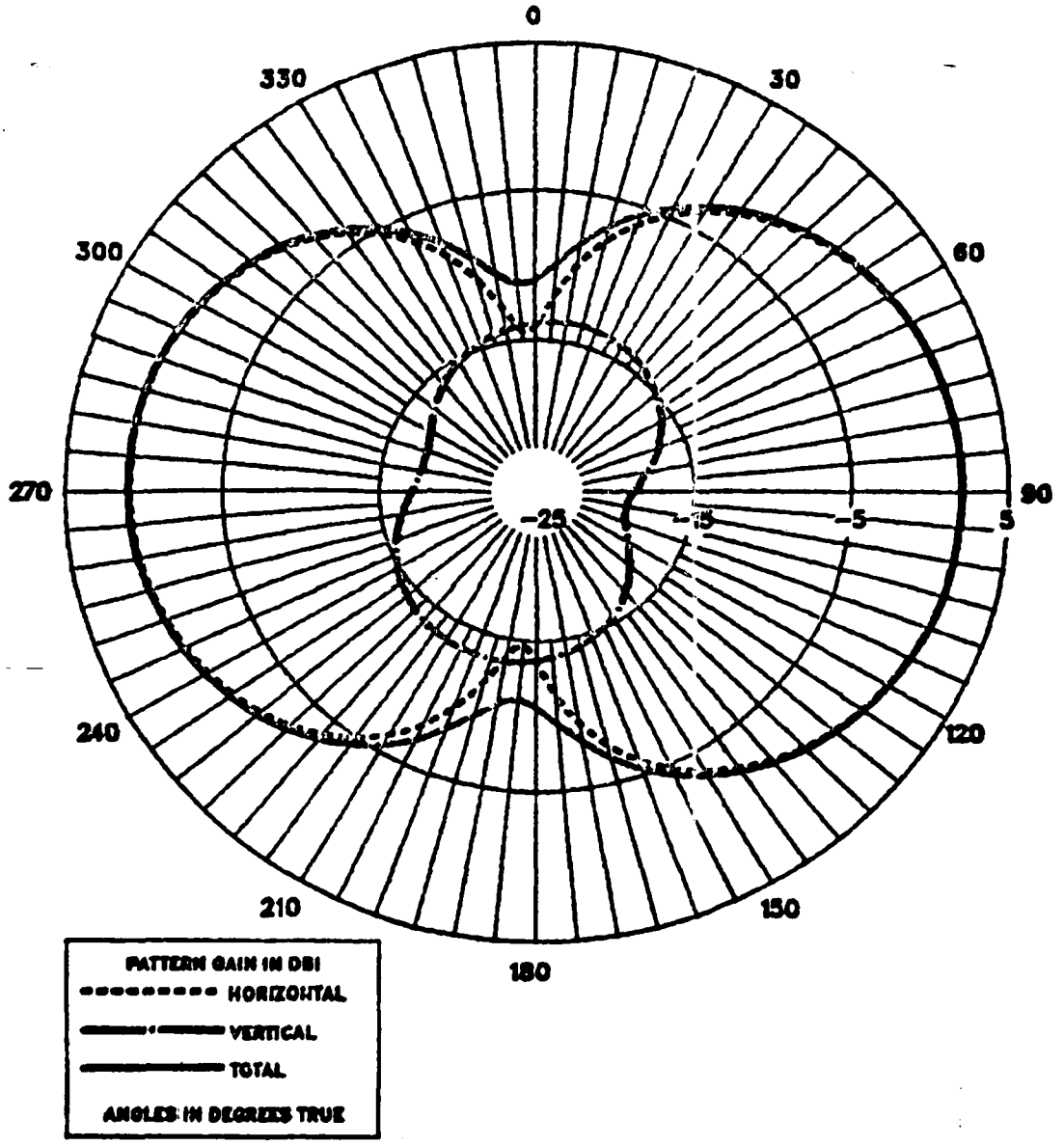

H65 IGUANA DATA RUN AT 7.645MHZ ON 8/22/87

ARMY–TYPE TUBE ANT, FREE SPACE, HORIZ CUT, THETA=26

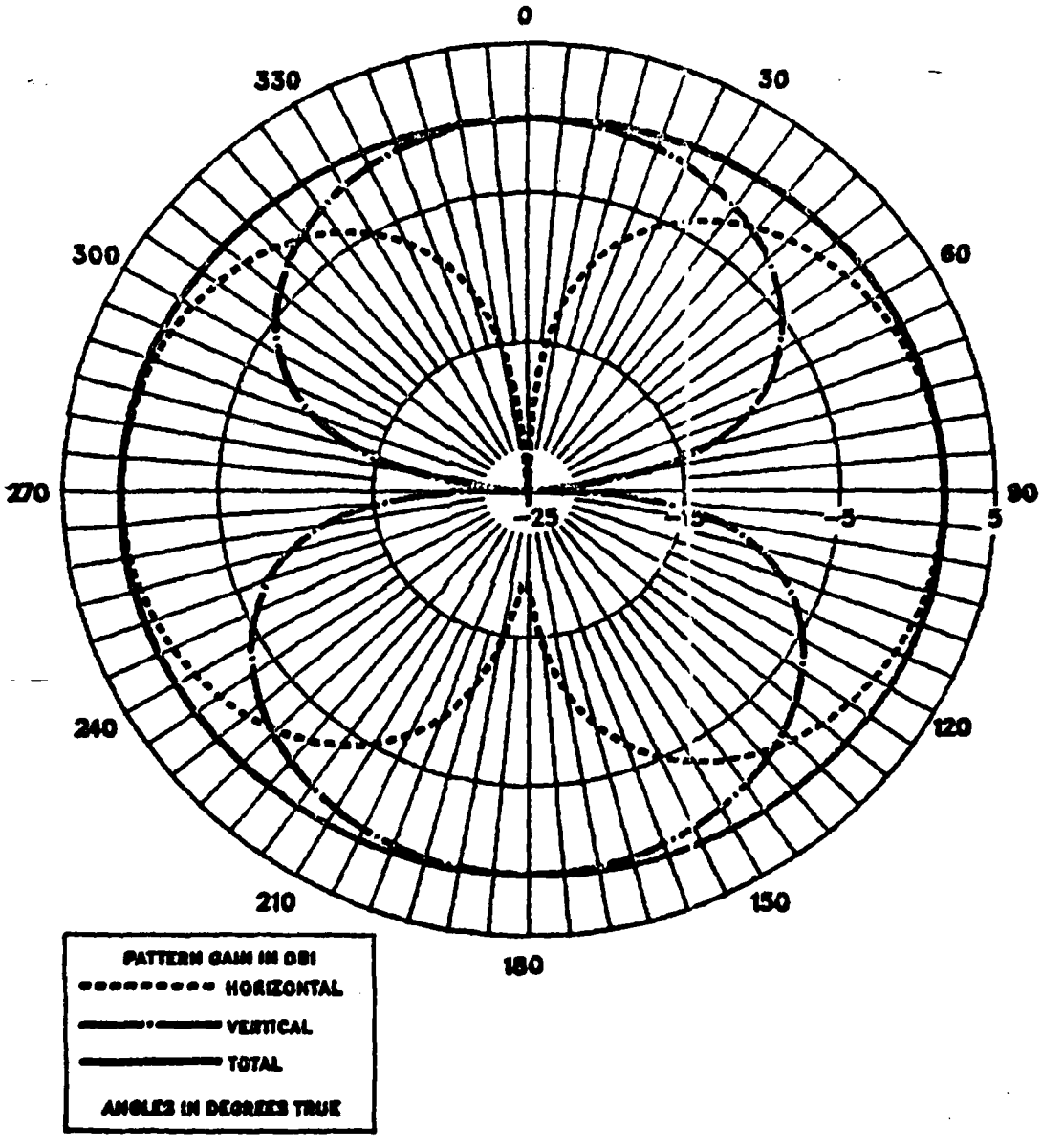

H65 IGUANA DATA RUN AT 7.645MHZ ON 8/22/87

ARMY-TYPE TUBE ANT, FREE SPACE, VERT CUT, PHI=0

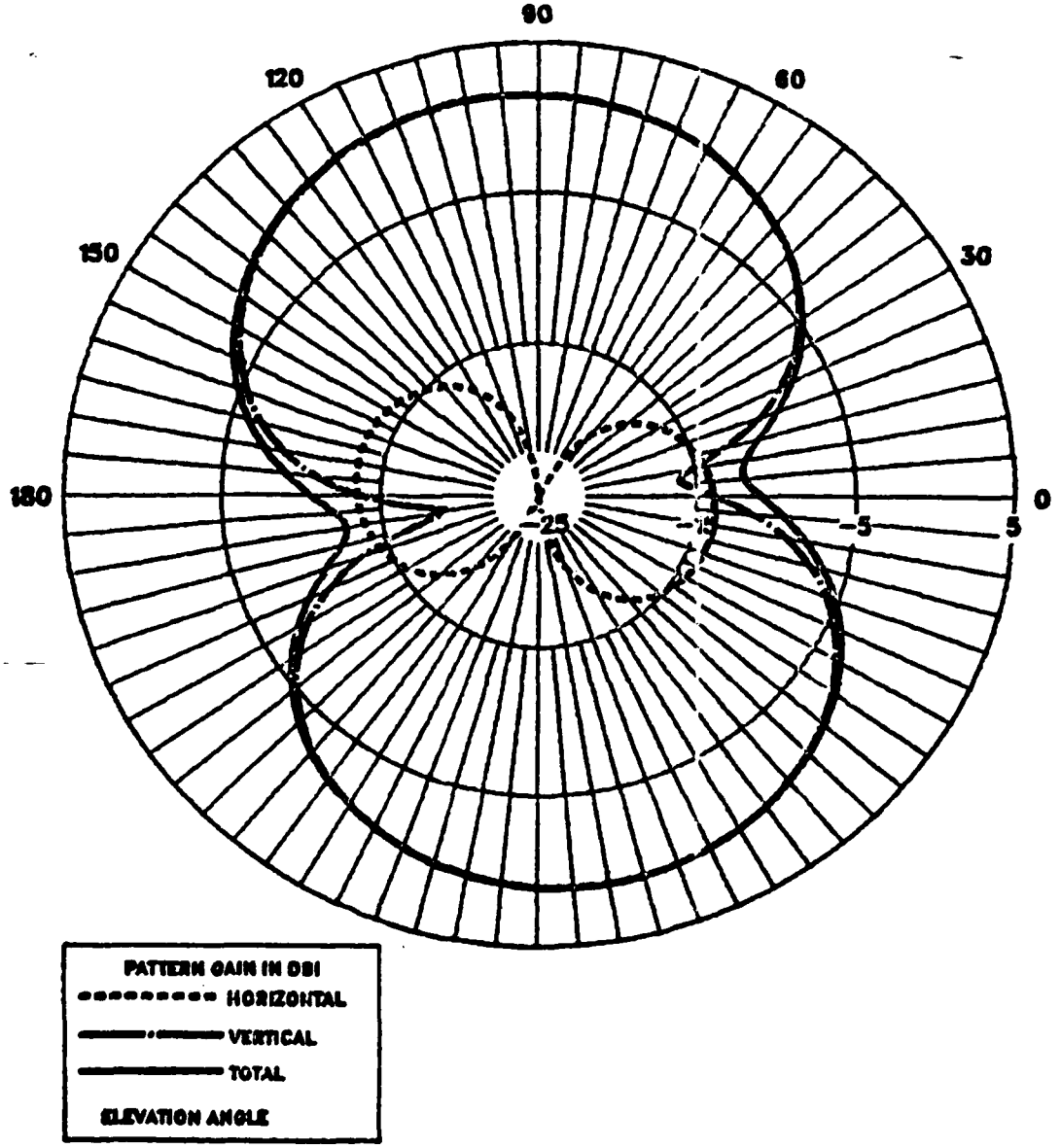

H65 IGUANA DATA RUN AT 7.645MHZ ON 8/22/87

ARMY–TYPE TUBE ANT, FREE SPACE, VERT CUT, PHI=45

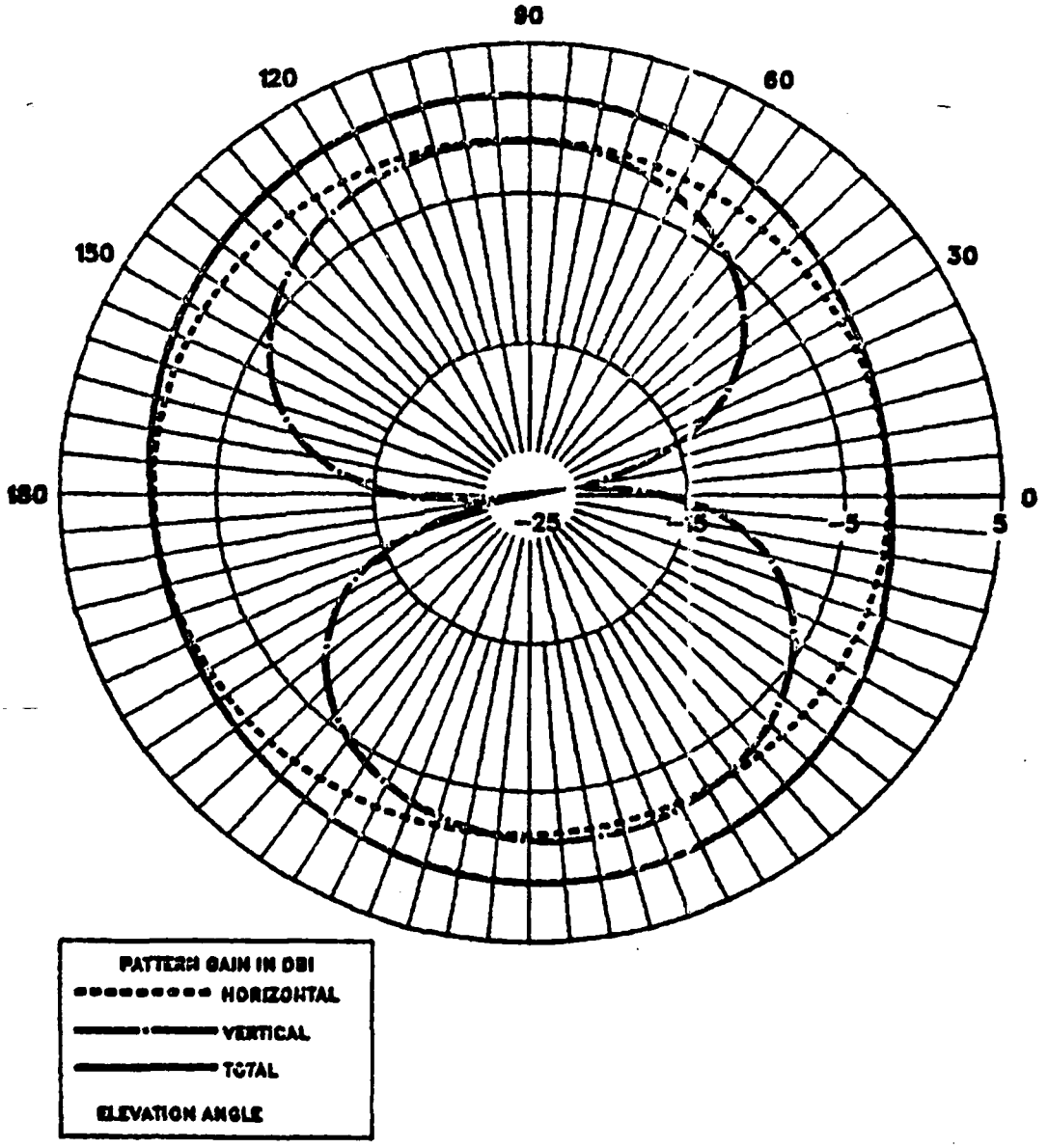

H65 IGUANA DATA RUN AT 7.645MHZ ON 8/22/87

LONG SHUNTED LOOP, FREE SPACE, HORIZ CUT, THETA=90

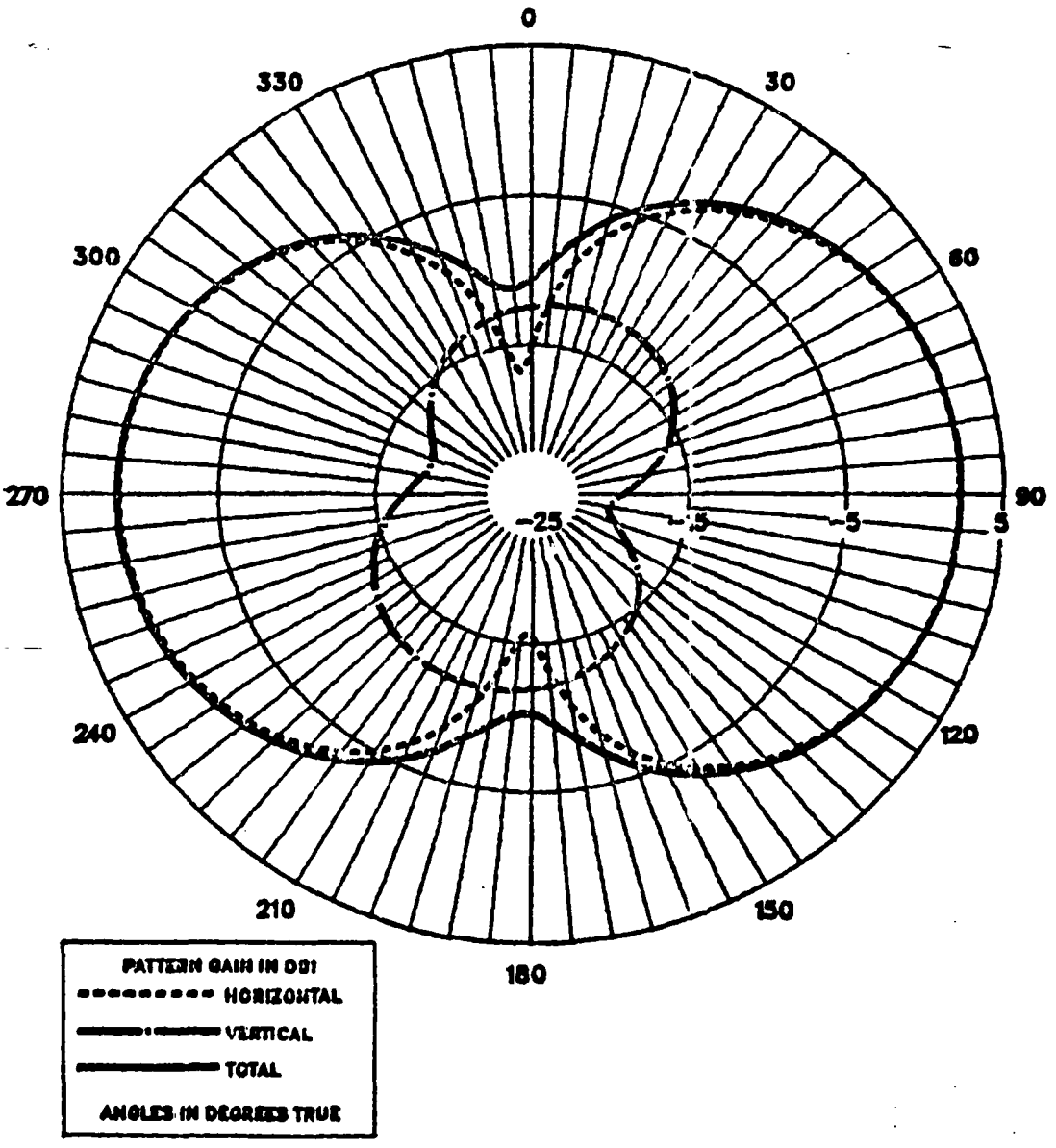

H65 IGUANA DATA RUN AT 7.645MHZ ON 8/22/87

LONG SHUNTED LOOP, FREE SPACE, HORIZ CUT, THETA=26

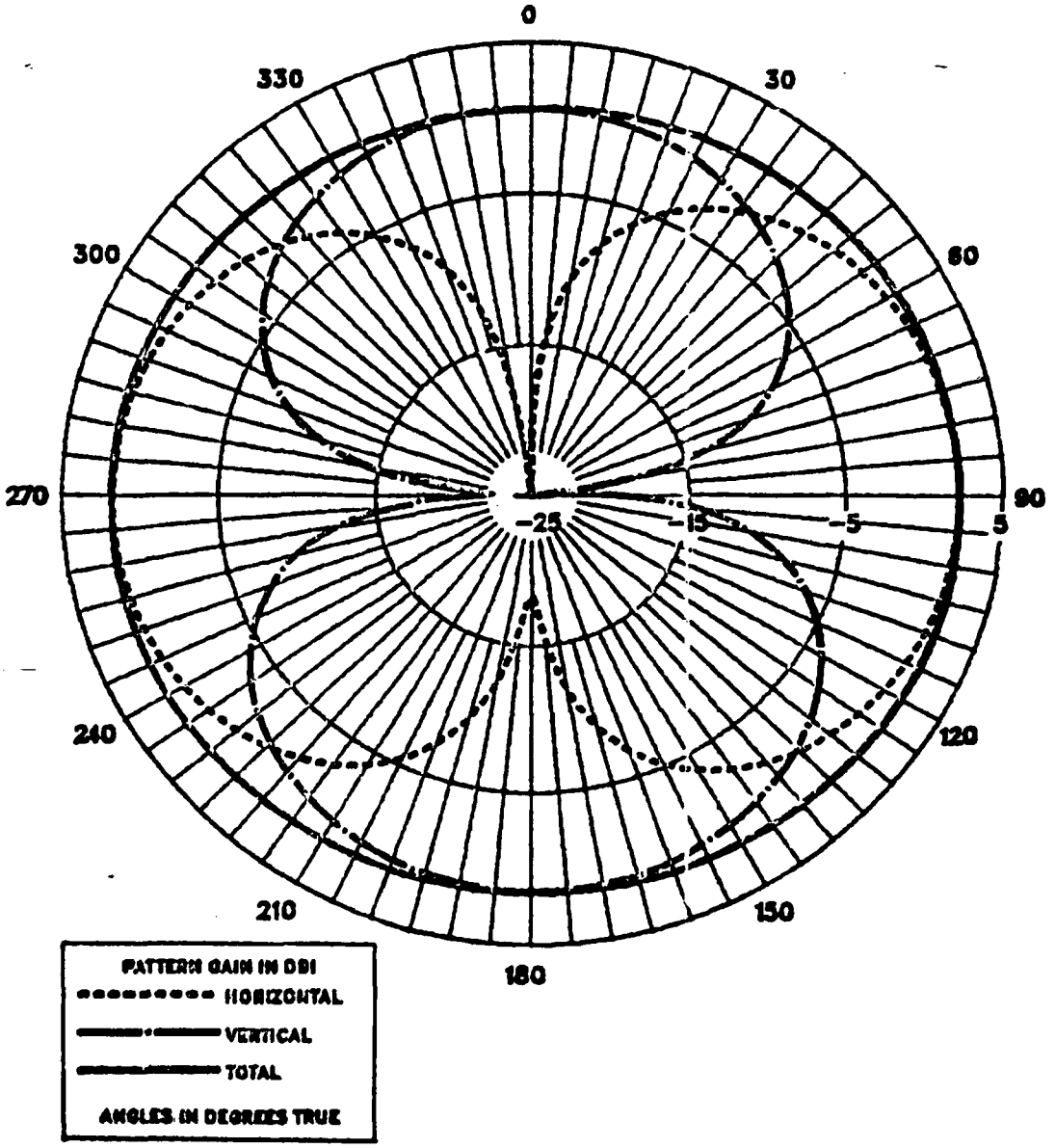

H65 IGUANA DATA RUN AT 7.645MHZ ON 8/22/87

LONG SHUNTED LOOP, FREE SPACE, VERT CUT, PHI=0

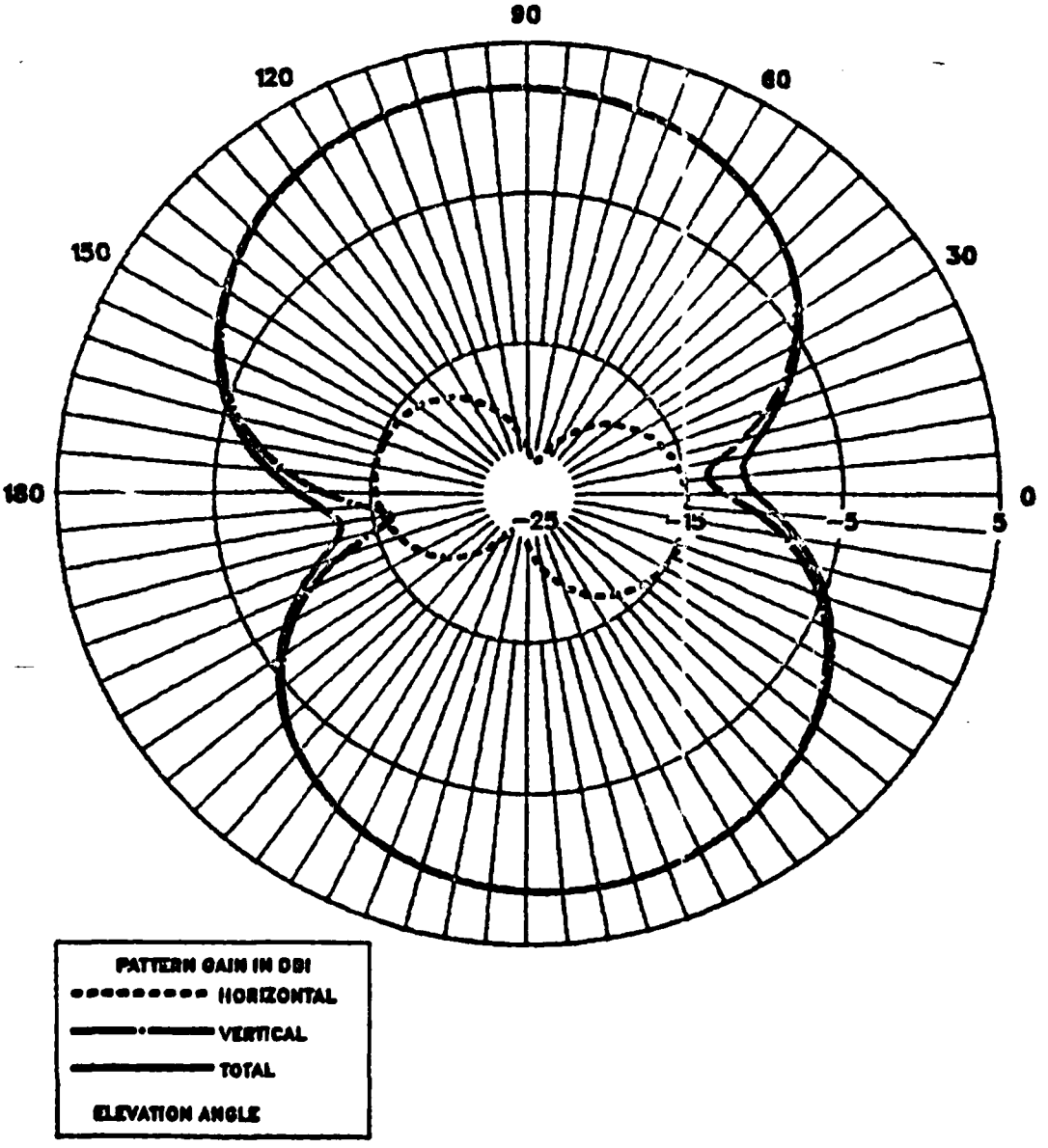

H65 IGUANA DATA RUN AT 7.645MHZ ON 8/22/87

LONG SHUNTED LOOP, FREE SPACE, VERT CUT, PHI=45

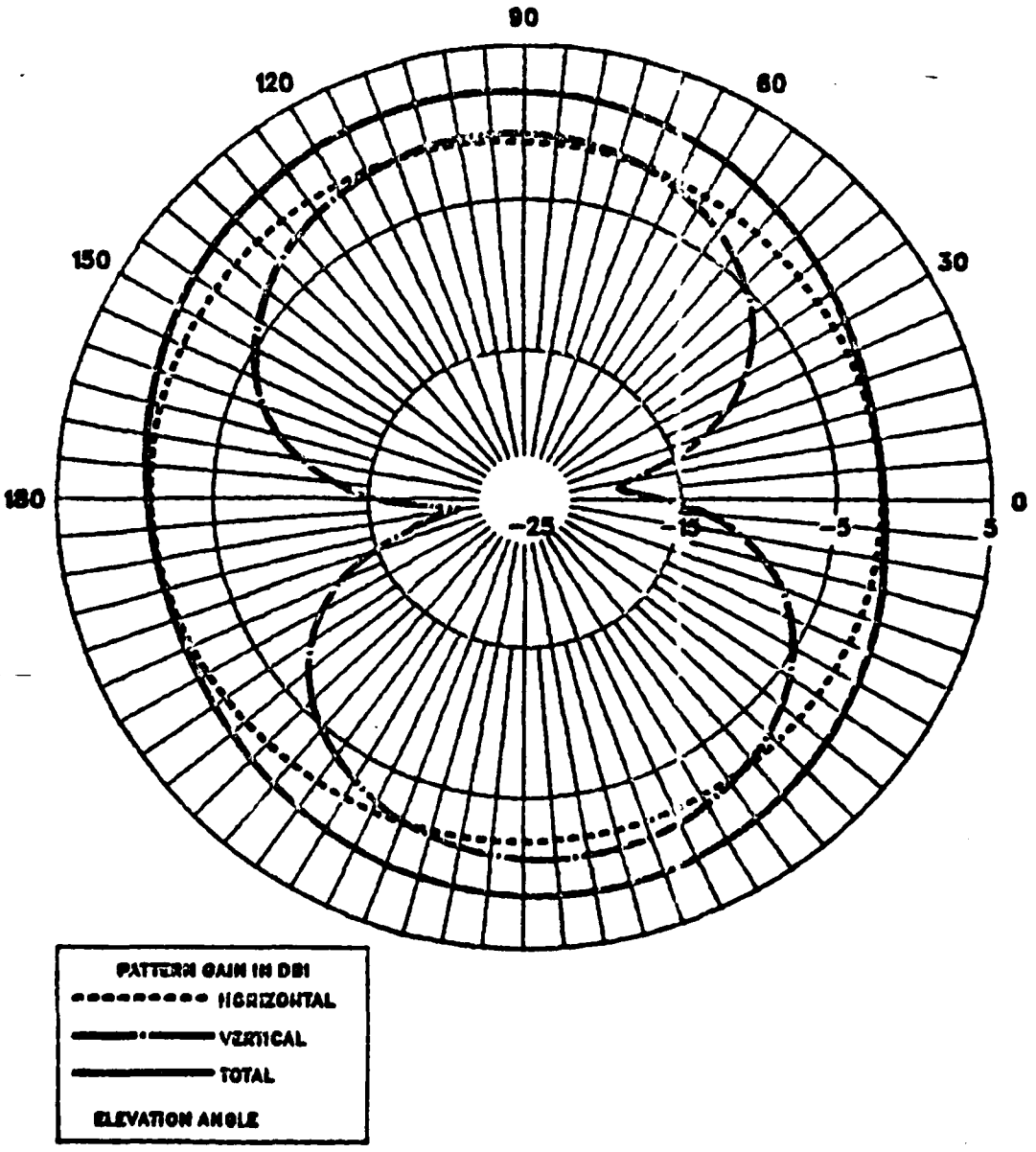

H65 IGUANA DATA RUN AT 8.984MHZ ON 8/24/87

LONG-WIRE ANT, FREE SPACE, HORIZ CUT, THETA=90

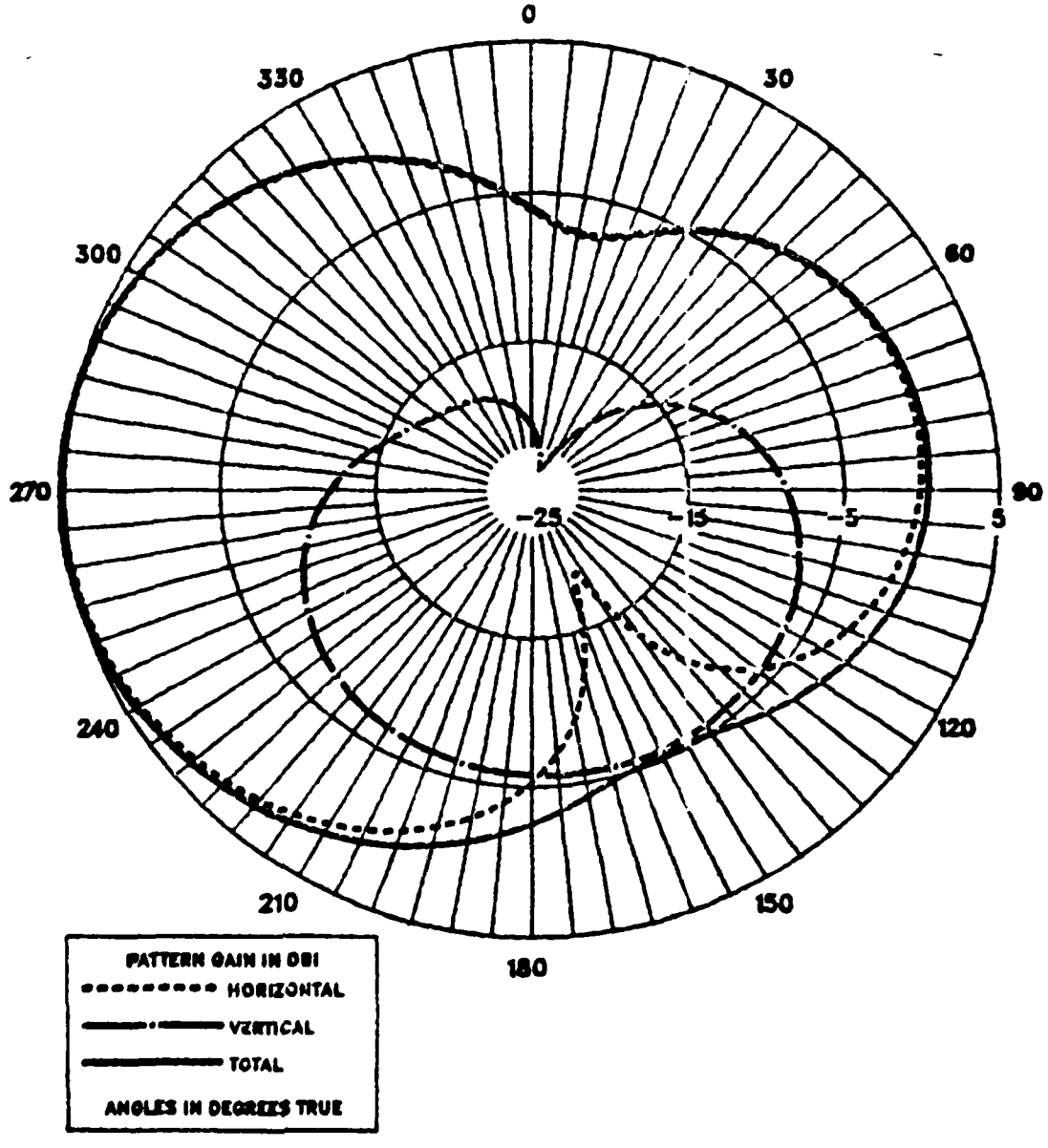

H65 IGUANA DATA RUN AT 8.984MHZ ON 8/24/87

LONG-WIRE ANT, FREE SPACE, HORIZ CUT, THETA=26

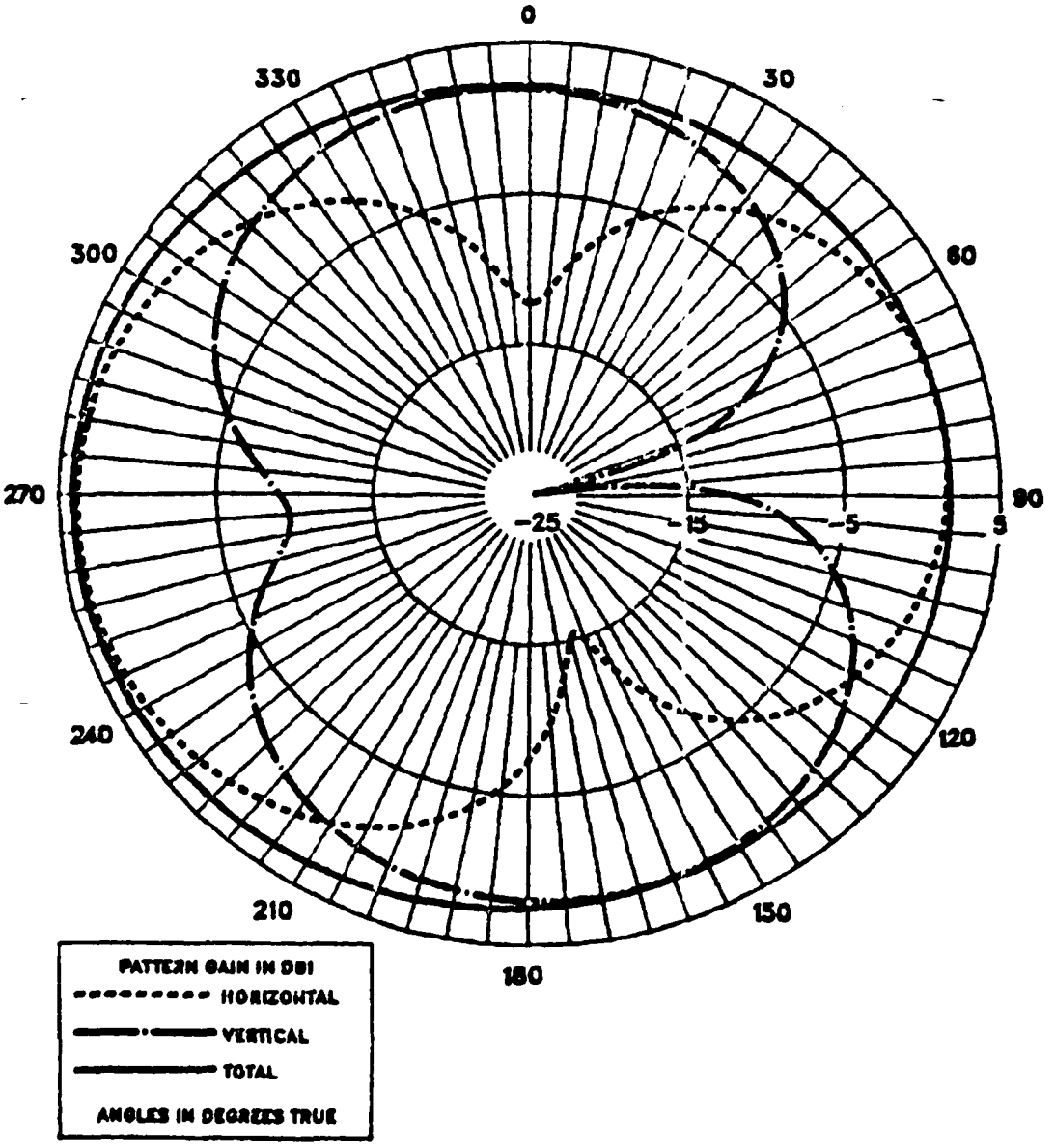

H65 IGUANA DATA RUN AT 8.984MHZ ON 8/24/87

LONG-WIRE ANT, FREE SPACE, VERT CUT, PHI=0

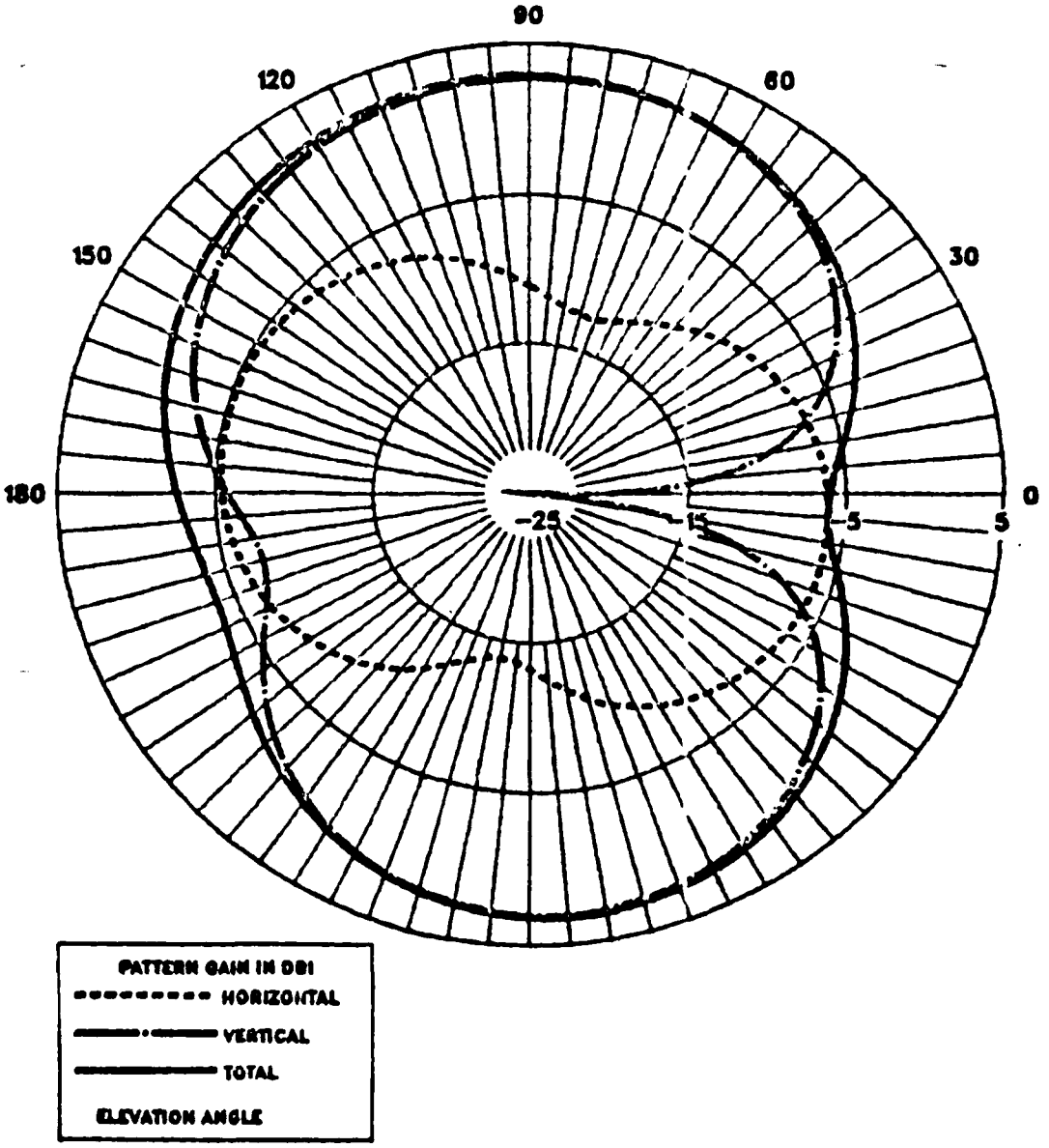

H65 IGUANA DATA RUN AT 8.984MHZ ON 8/24/87

LONG-WIRE ANT, FREE SPACE, VERT CUT, PHI=45

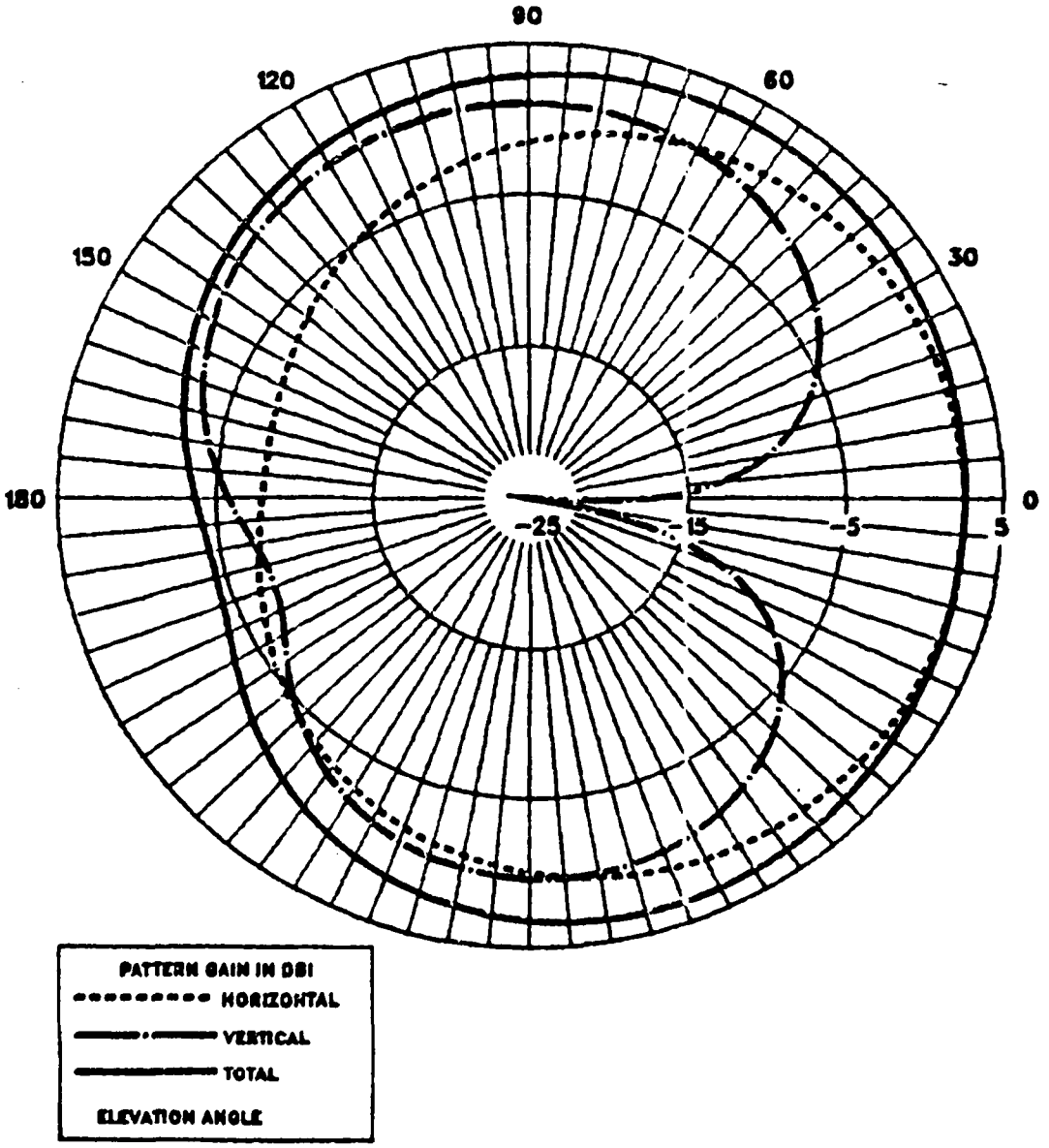

H65 IGUANA DATA RUN AT 8.984MHZ ON 8/24/87

COLLINS 437R-2 ANT, FREE SPACE, HORIZ CUT, THETA=90

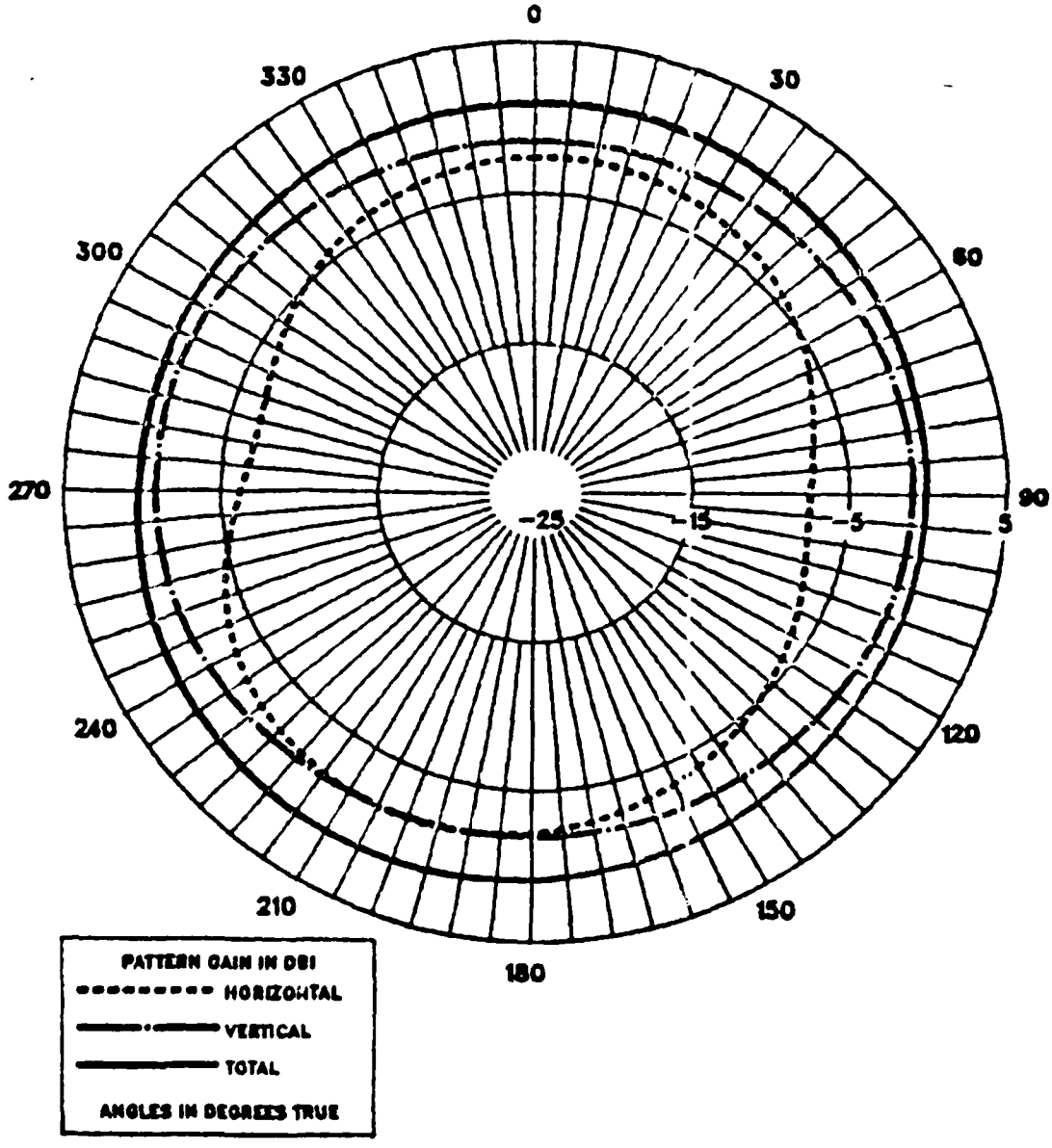

H65 IGUANA DATA RUN AT 8.984MHZ ON 8/24/87

COLLINS 437R-2 ANT, FREE SPACE, HORIZ CUT, THETA=26

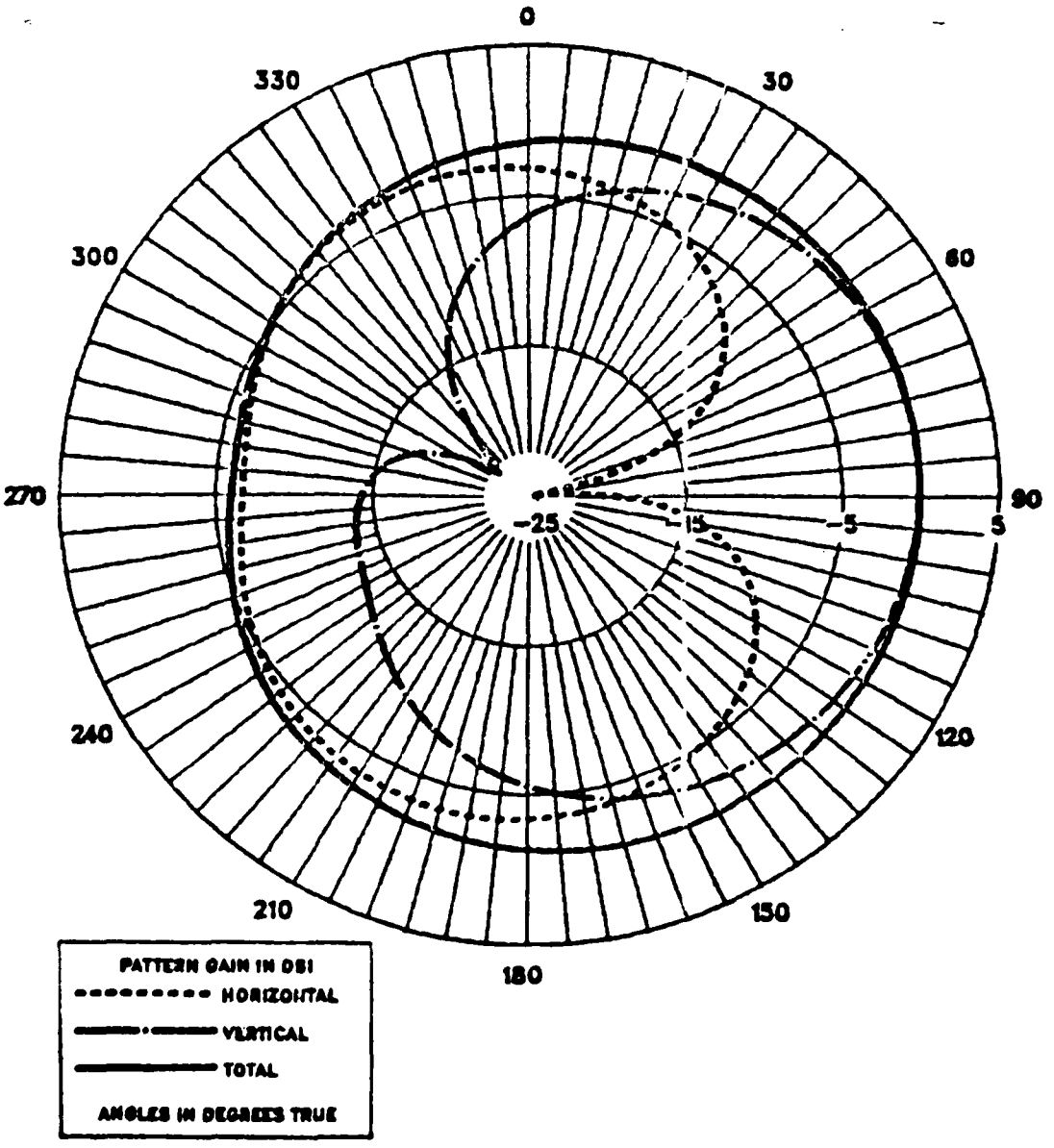

H65 IGUANA DATA RUN AT 8.984MHZ ON 8/24/87

COLLINS 437R-2 ANT, FREE SPACE, VERT CUT, PHI=0

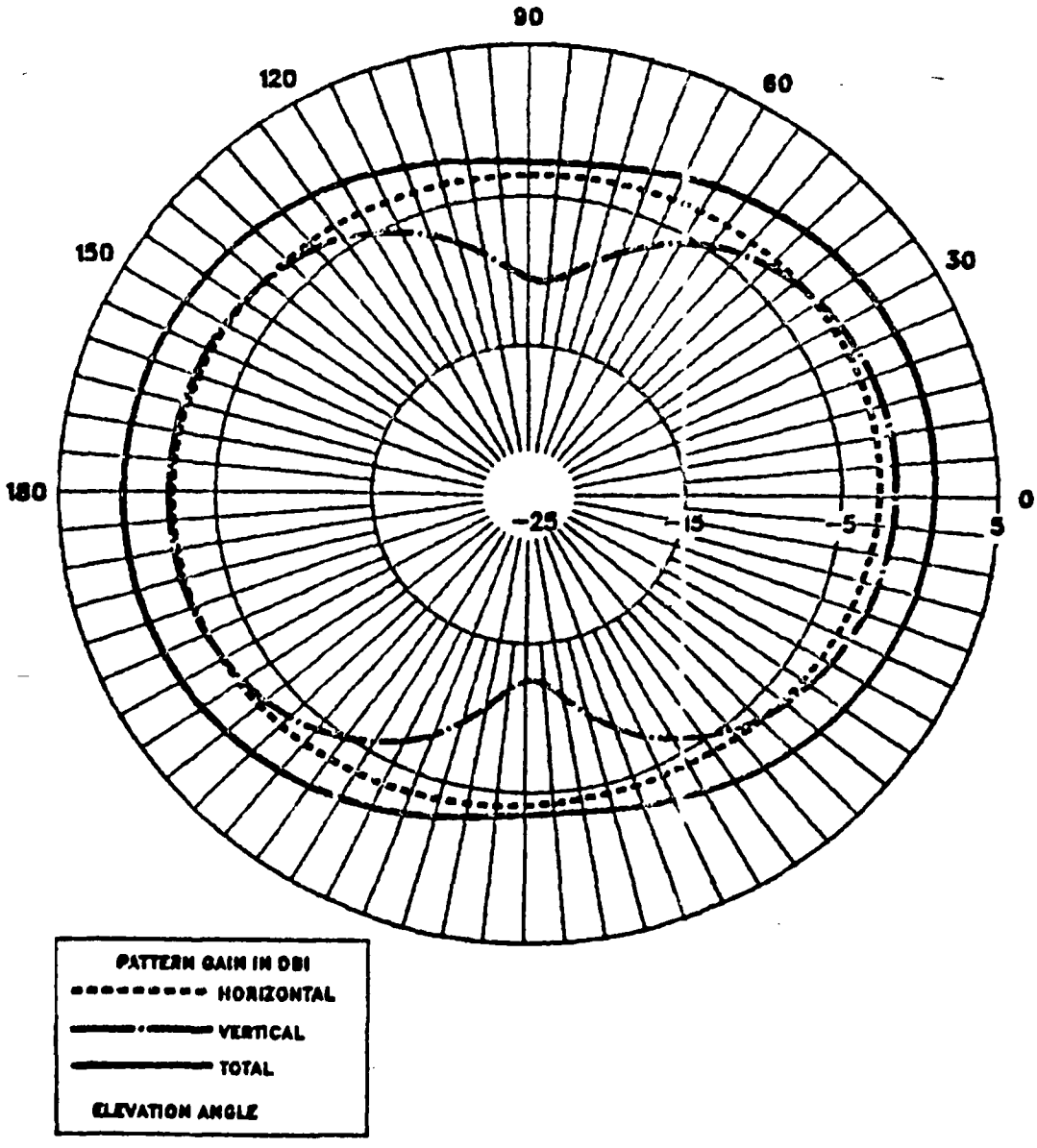

H65 IGUANA DATA RUN AT 8.984MHZ ON 8/24/87

COLLINS 437R-2 ANT, FREE SPACE, VERT CUT, PHI=45

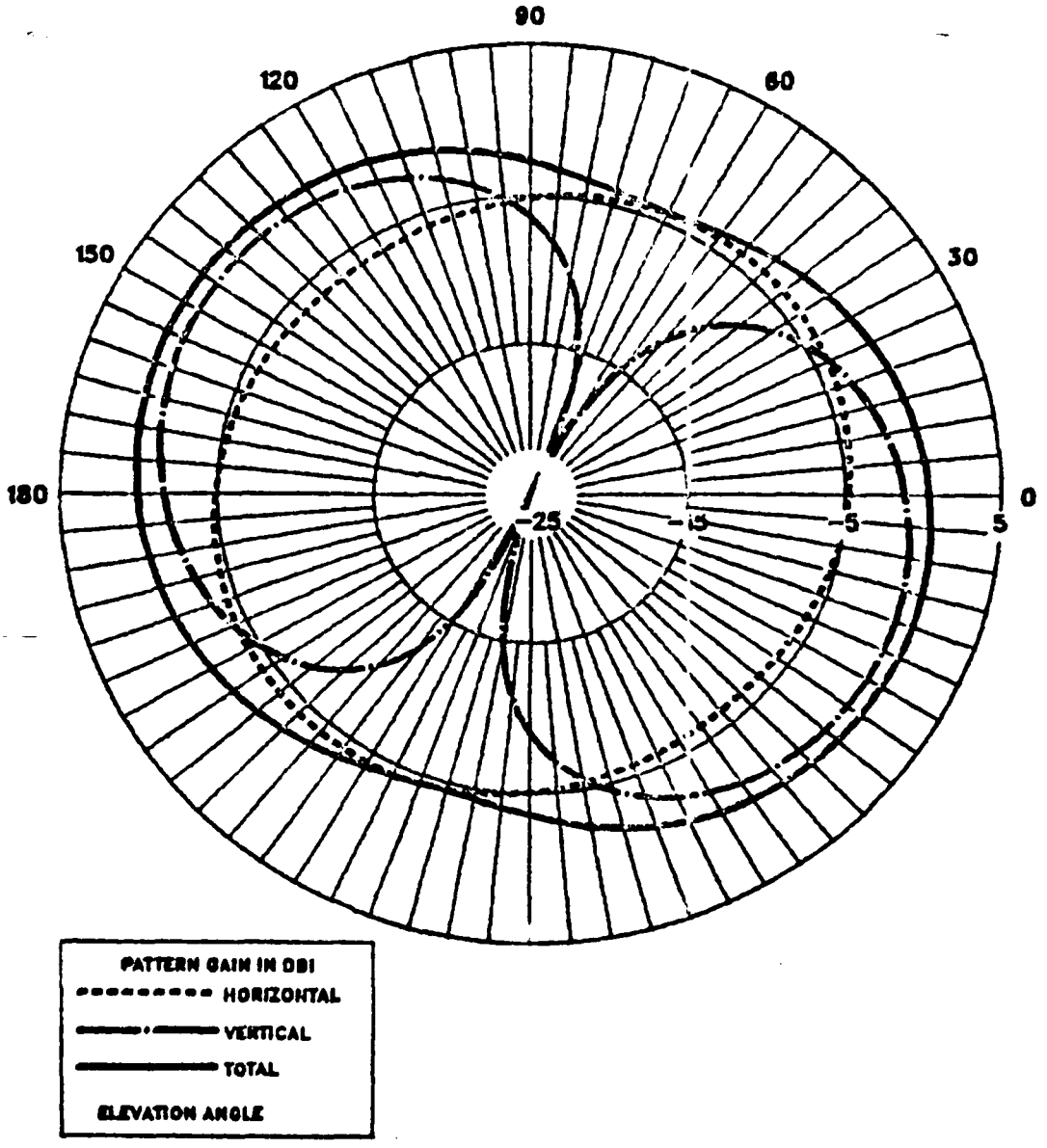

H65 IGUANA DATA RUN AT 8.984MHZ ON 8/24/87

ARMY–TYPE TUBE ANT, FREE SPACE, HORIZ CUT, THETA=90

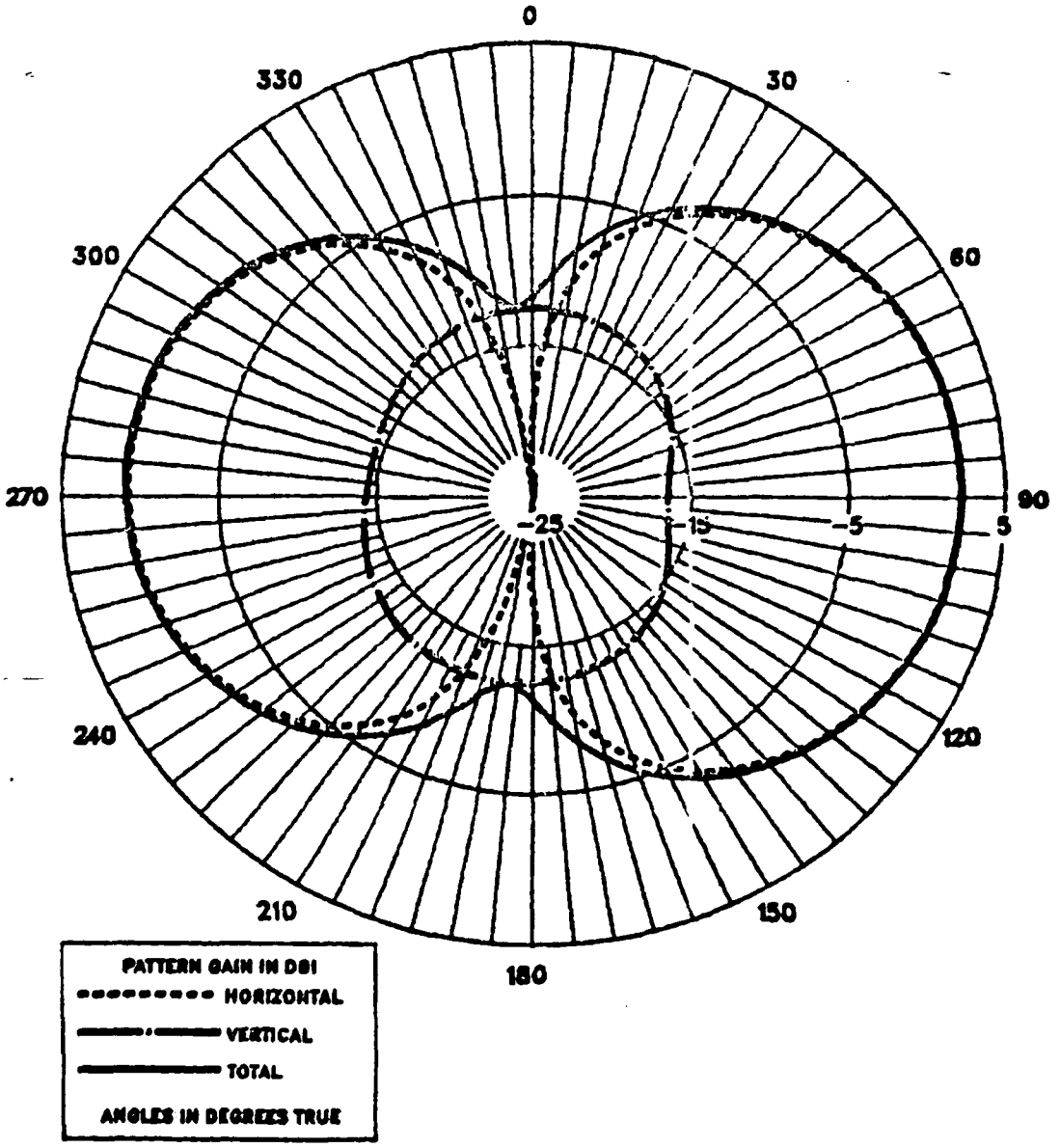

H65 IGUANA DATA RUN AT 8.984MHZ ON 8/24/87

ARMY-TYPE TUBE ANT, FREE SPACE, HORIZ CUT, THETA=26

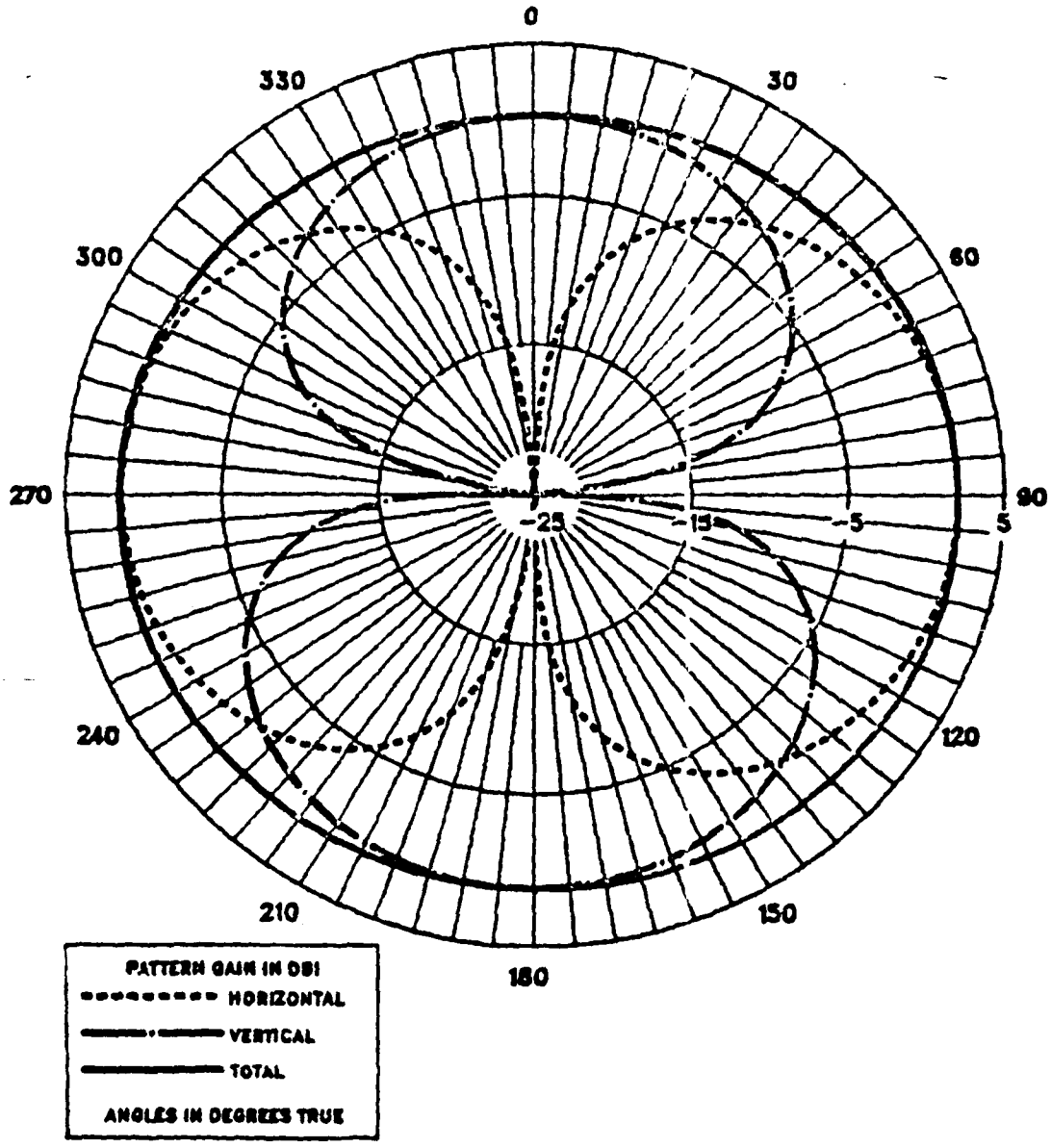

H65 IGUANA DATA RUN AT 8.984MHZ ON 8/24/87

ARMY–TYPE TUBE ANT, FREE SPACE, VERT CUT, PHI=0

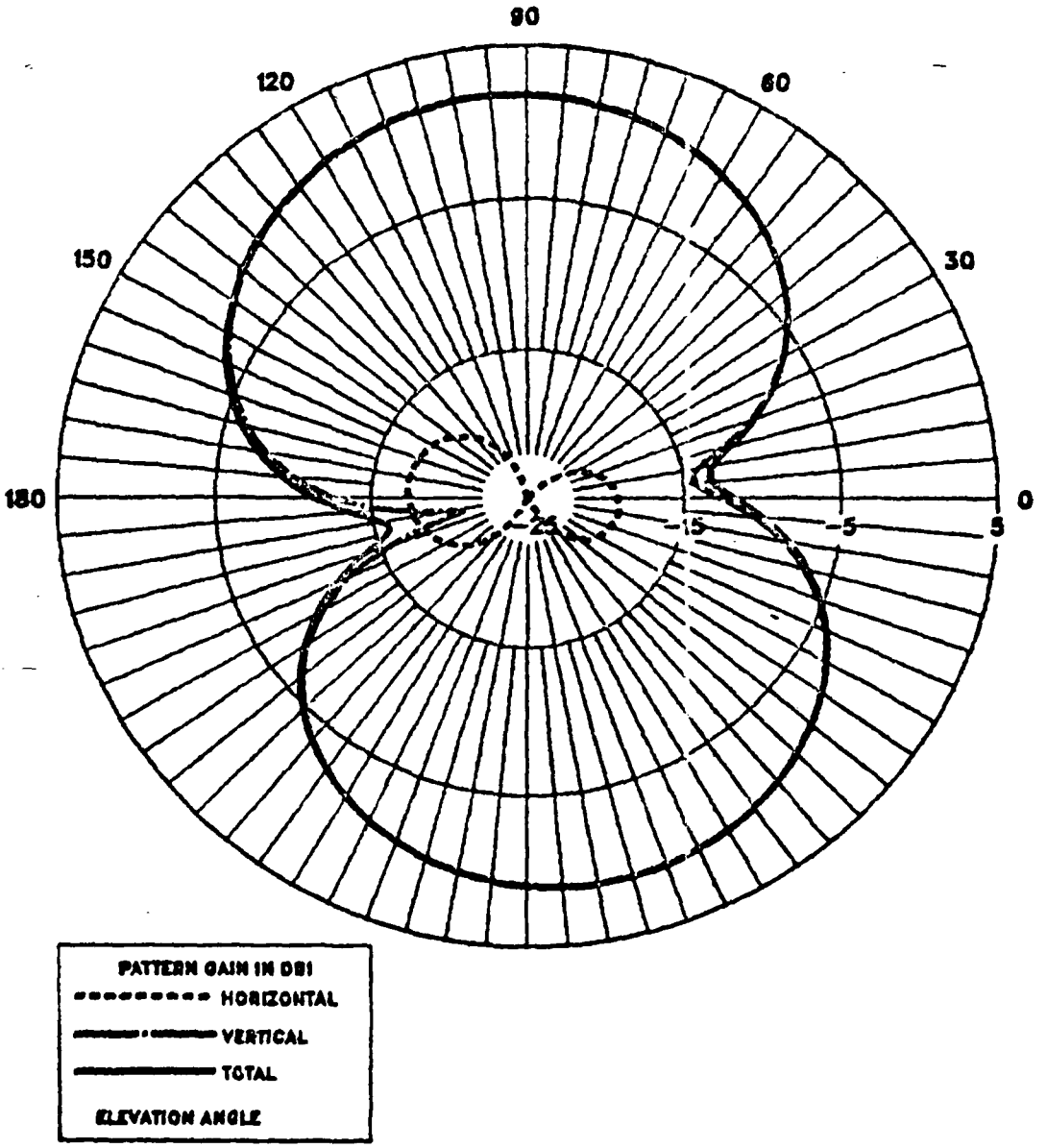

H65 IGUANA DATA RUN AT 8.984MHZ ON 8/24/87

ARMY–TYPE TUBE ANT, FREE SPACE, VERT CUT, PHI=45

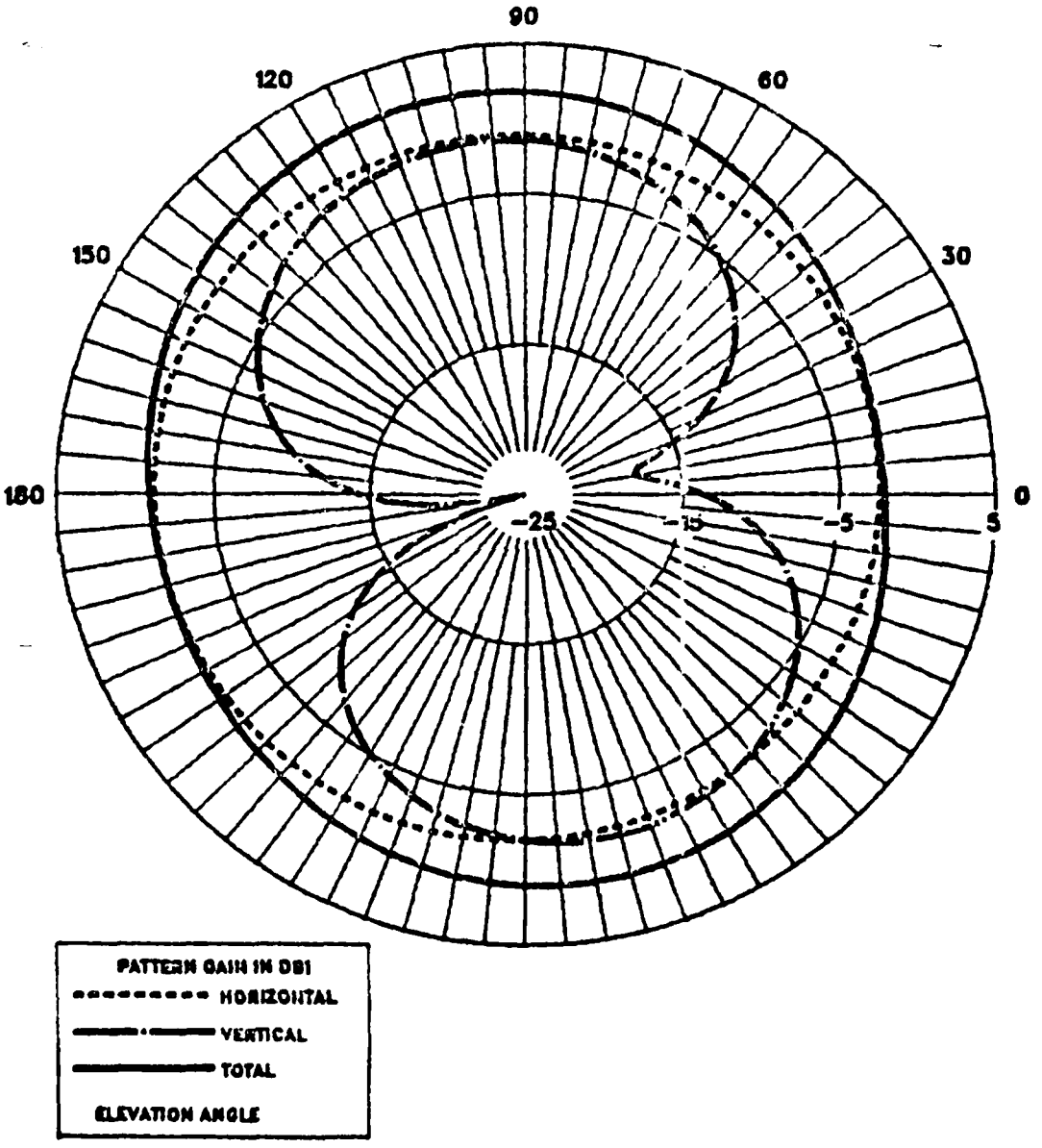

H65 IGUANA DATA RUN AT 8.984MHZ ON 8/24/87

LONG SHUNTED LOOP, FREE SPACE, HORIZ CUT, THETA=90

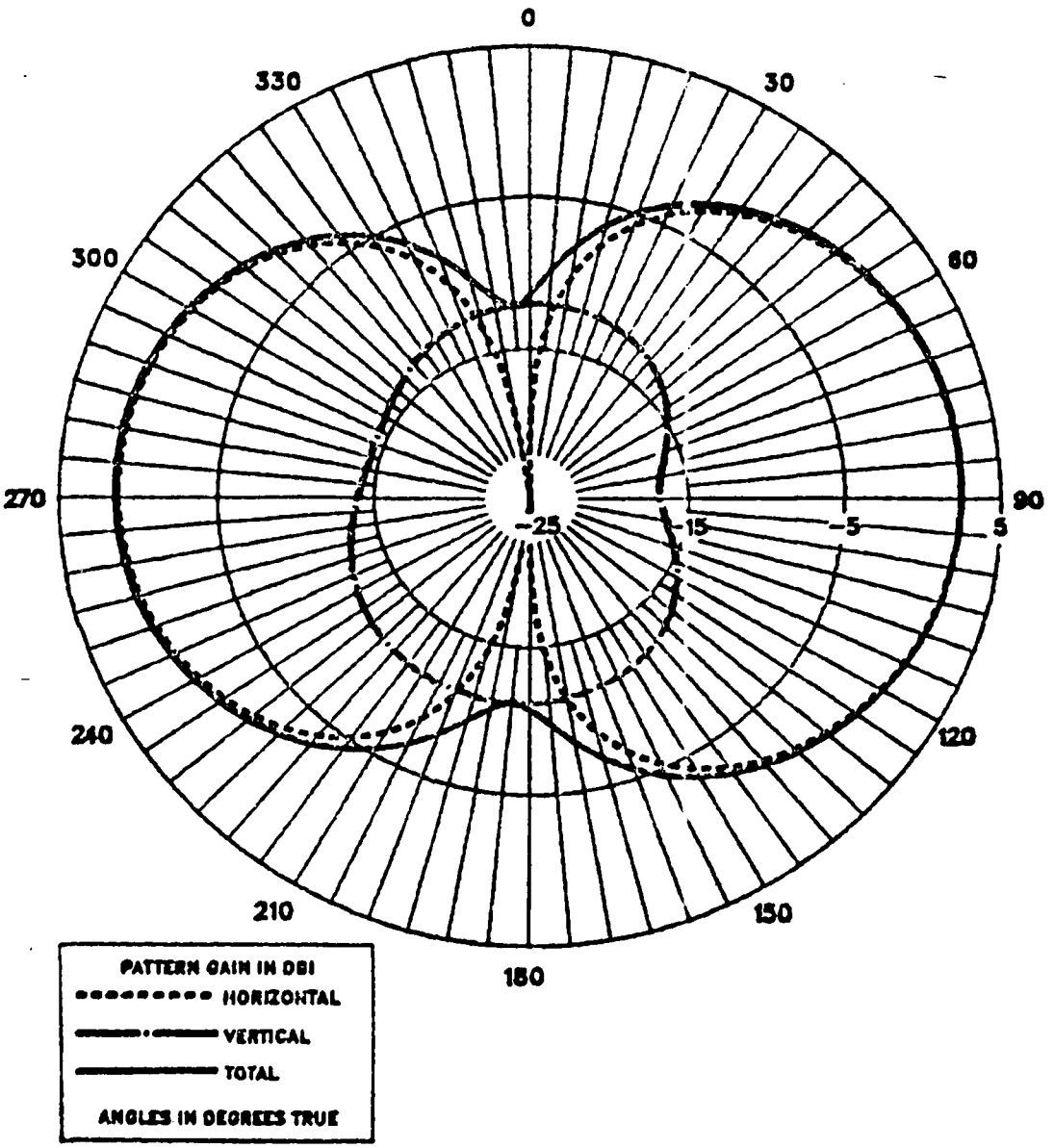

H65 IGUANA DATA RUN AT 8.984MHZ ON 8/24/87

LONG SHUNTED LOOP, FREE SPACE, HORIZ CUT, THETA=26

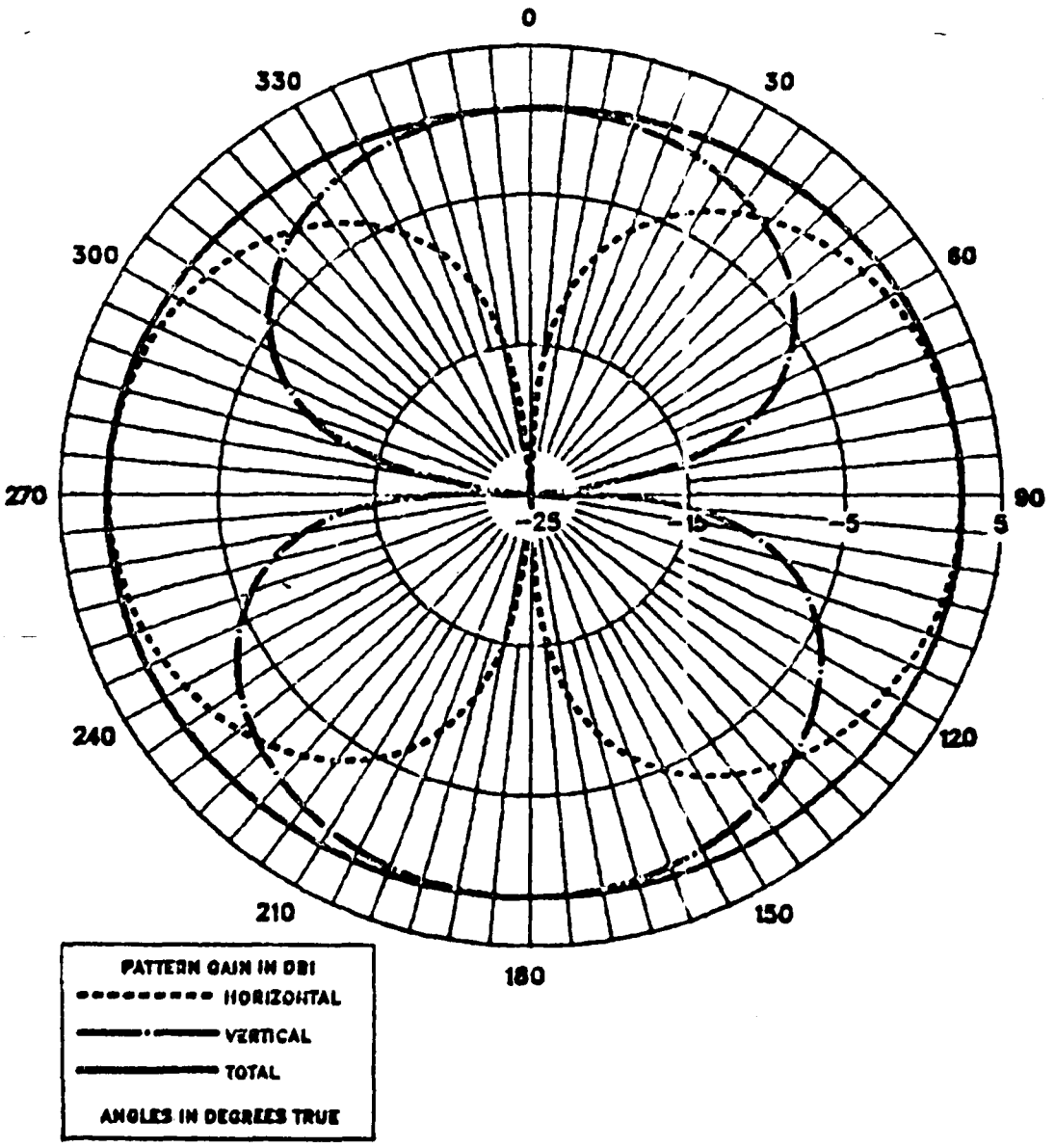

H65 IGUANA DATA RUN AT 8.984MHZ ON 8/24/87

LONG SHUNTED LOOP, FREE SPACE, VERT CUT, PHI=0

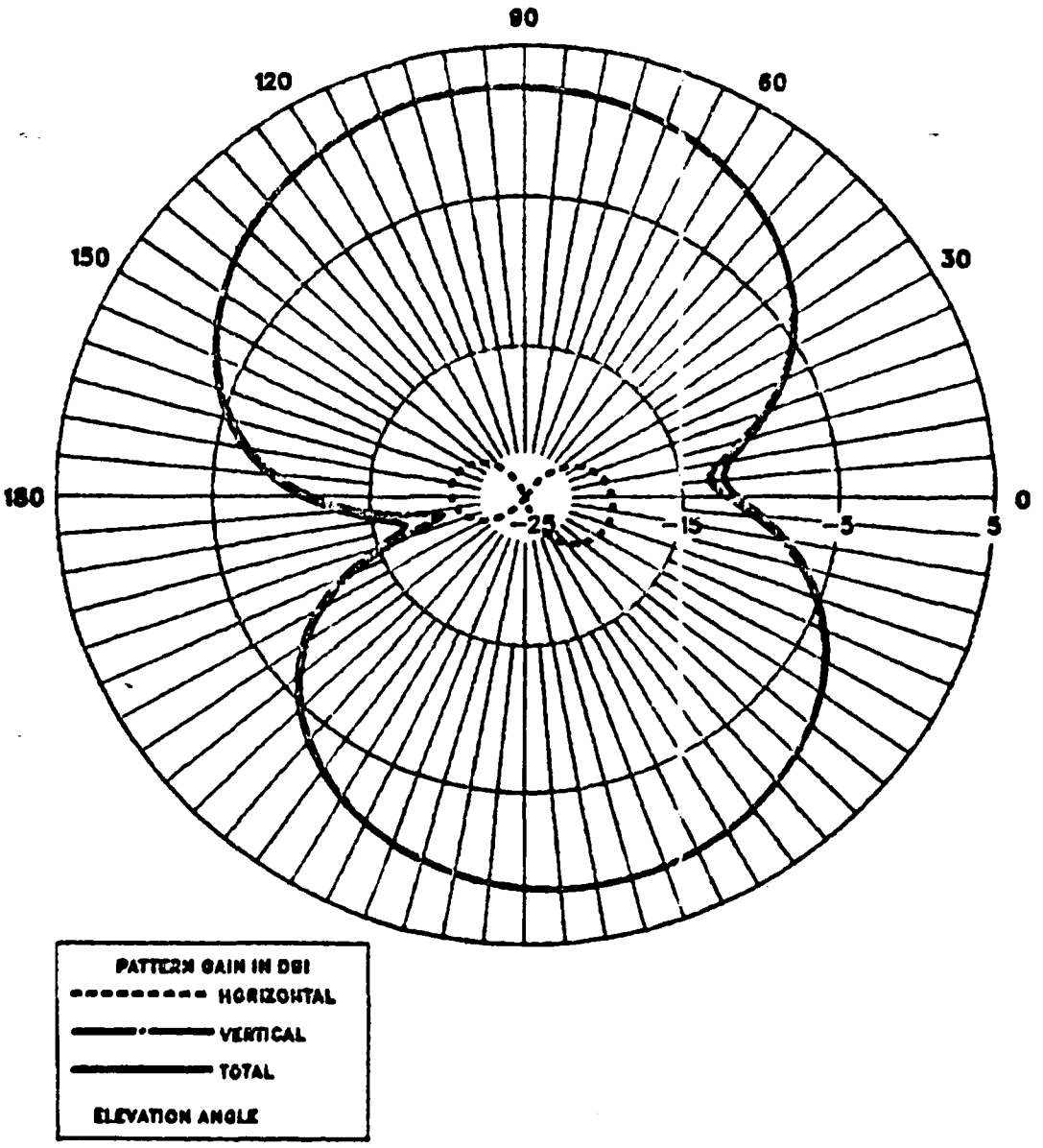

H65 IGUANA DATA RUN AT 8.984MHZ ON 8/24/87

LONG SHUNTED LOOP, FREE SPACE, VERT CUT, PHI=45

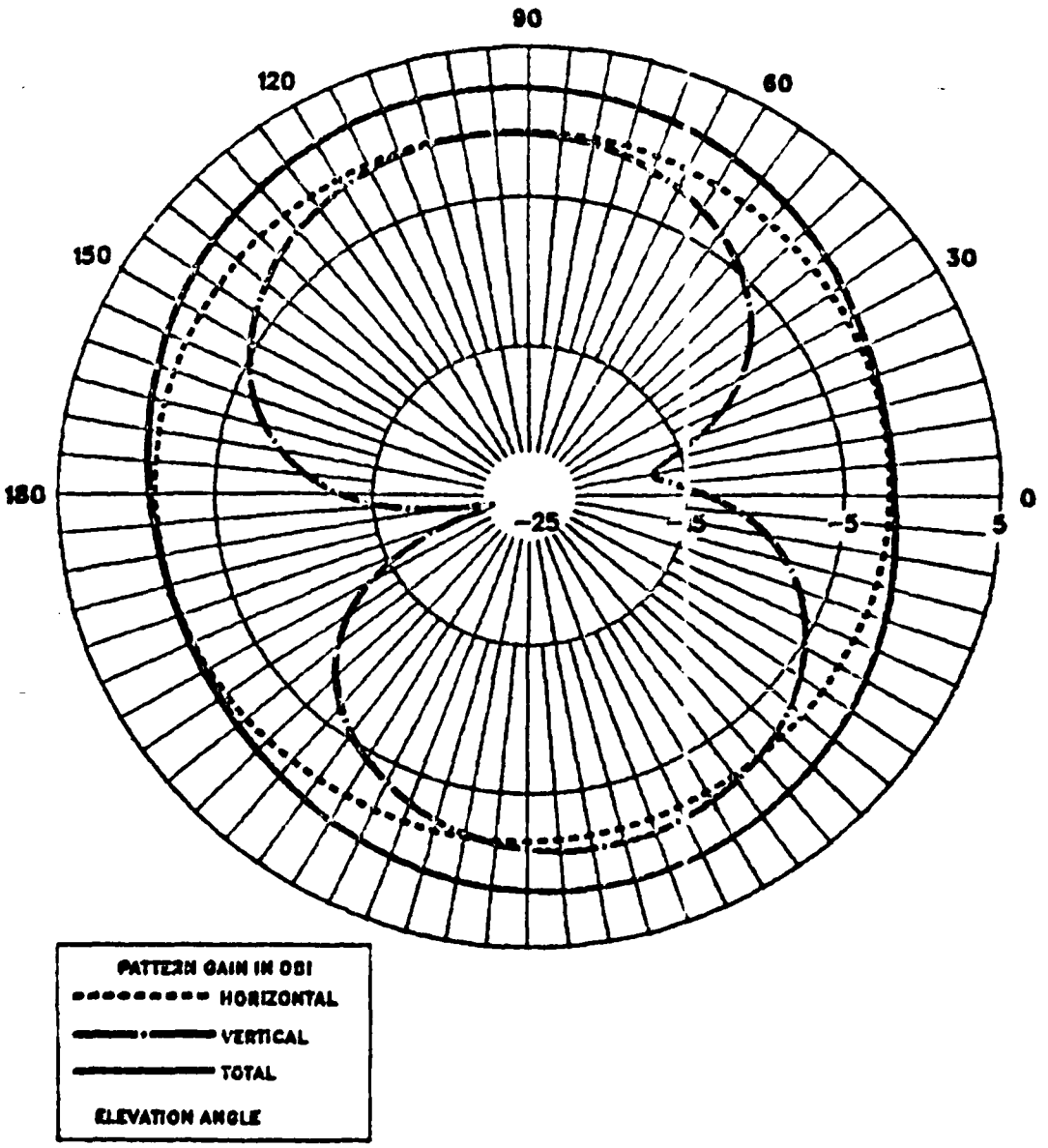

H65 IGUANA DATA RUN AT 13.974MHZ ON 8/25/87

LONG-WIRE ANT, FREE SPACE, HORIZ CUT, THETA=90

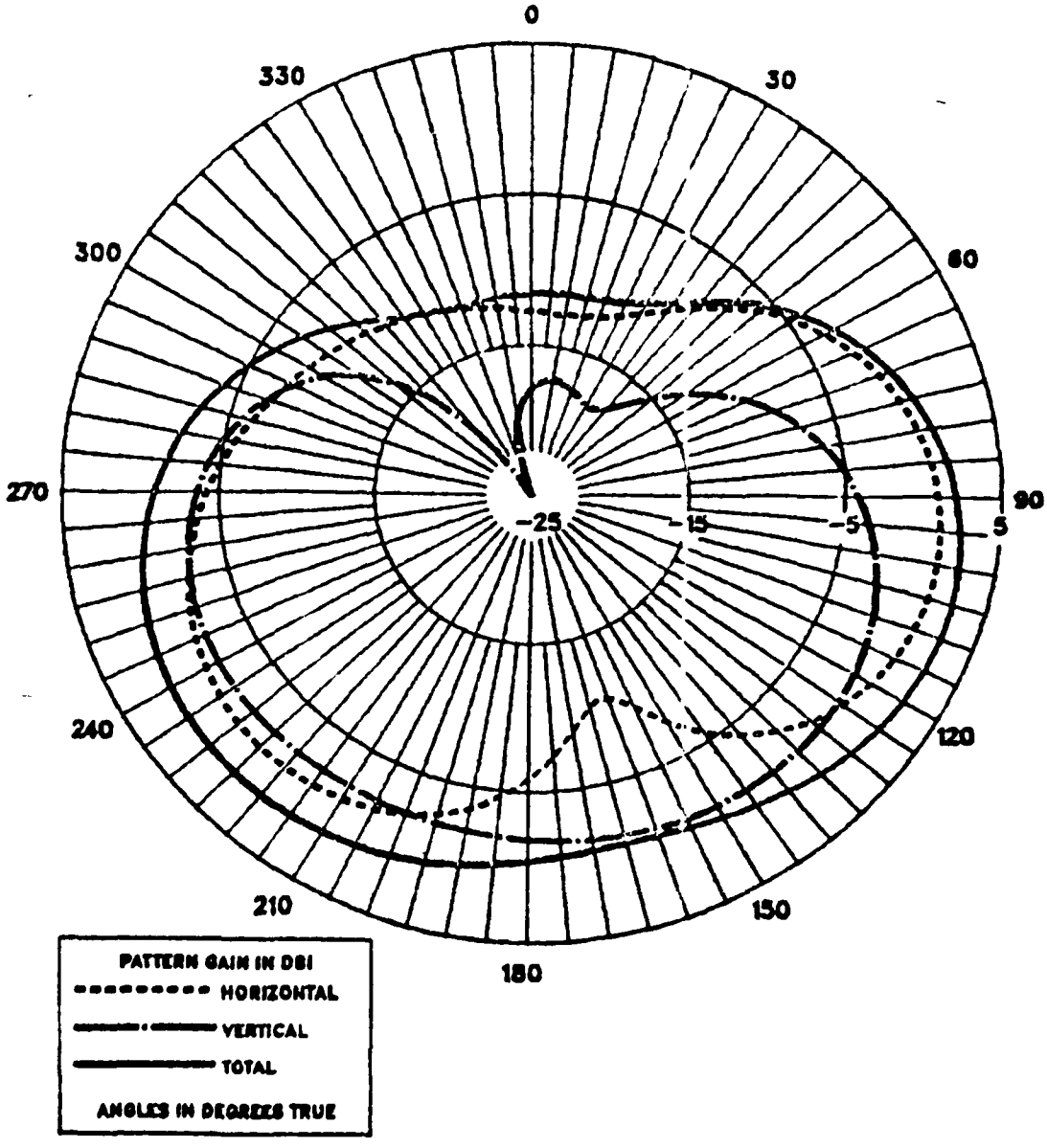

H65 IGUANA DATA RUN AT 13.974MHZ ON 8/25/87

LONG-WIRE ANT, FREE SPACE, HORIZ CUT, THETA=26

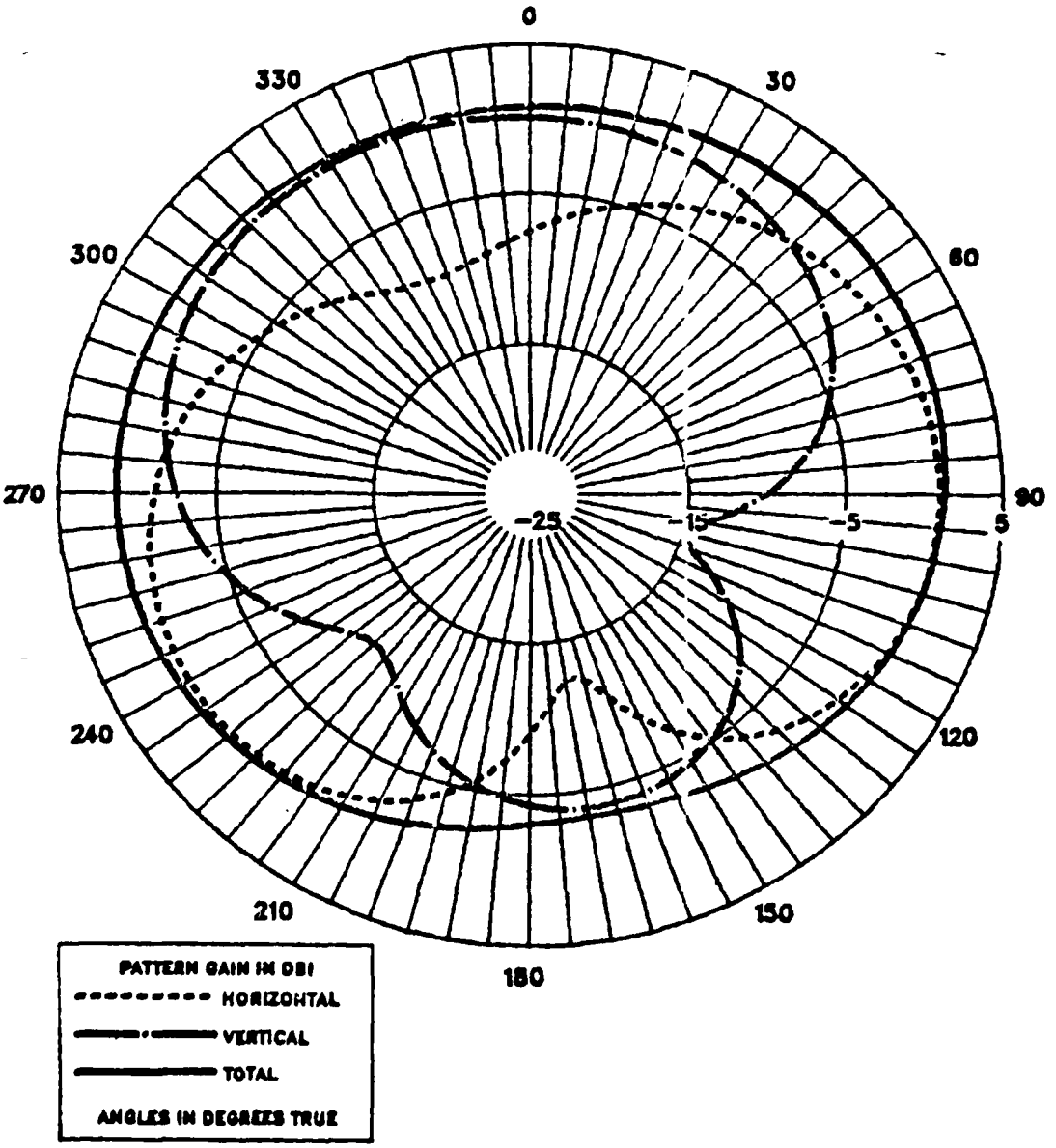

H65 IGUANA DATA RUN AT 13.974MHZ ON 8/25/87

LONG-WIRE ANT, FREE SPACE, VERT CUT, PHI=0

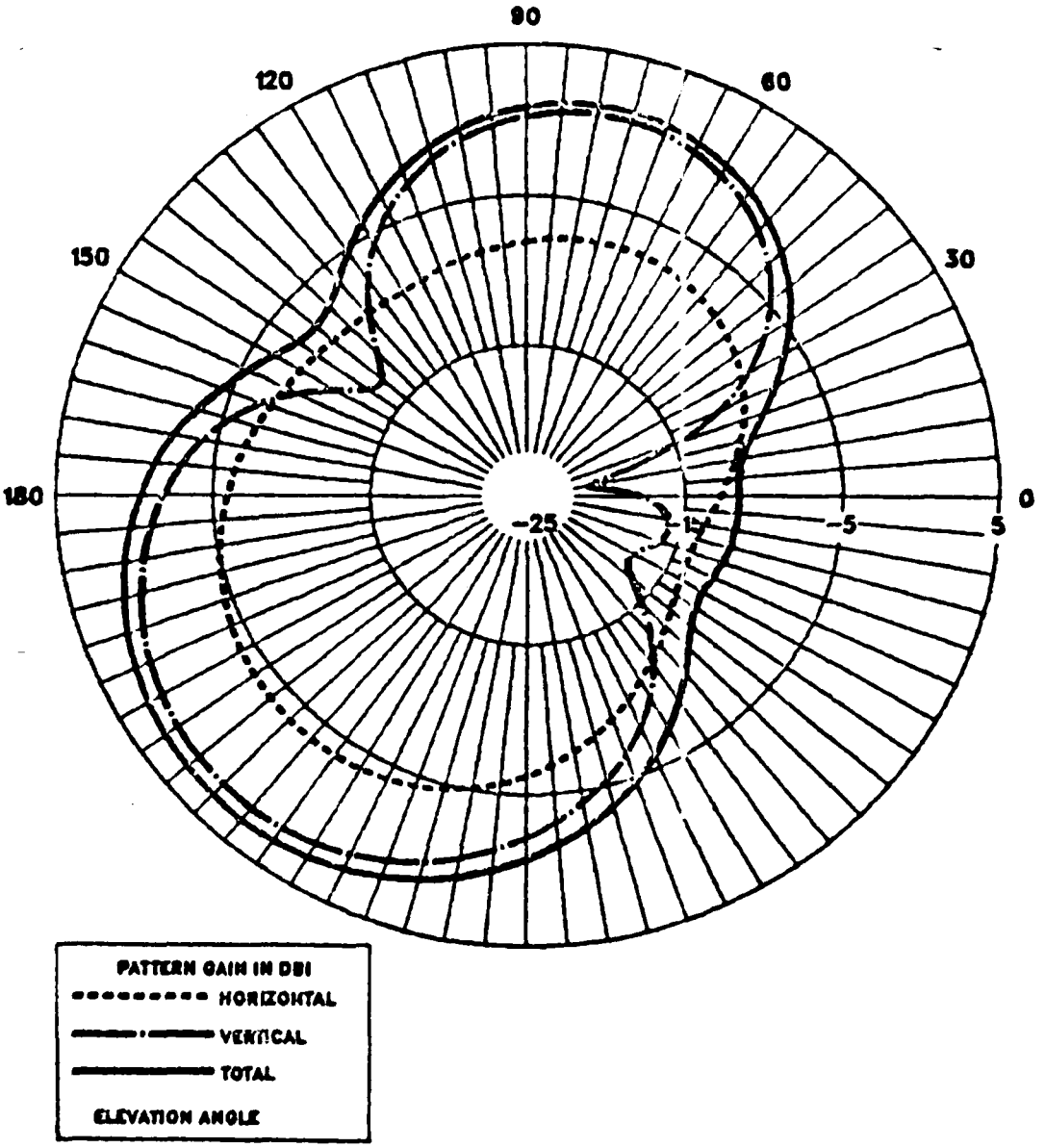

H65 IGUANA DATA RUN AT 13.974MHZ ON 8/25/87

LONG-WIRE ANT, FREE SPACE, VERT CUT, PHI=45

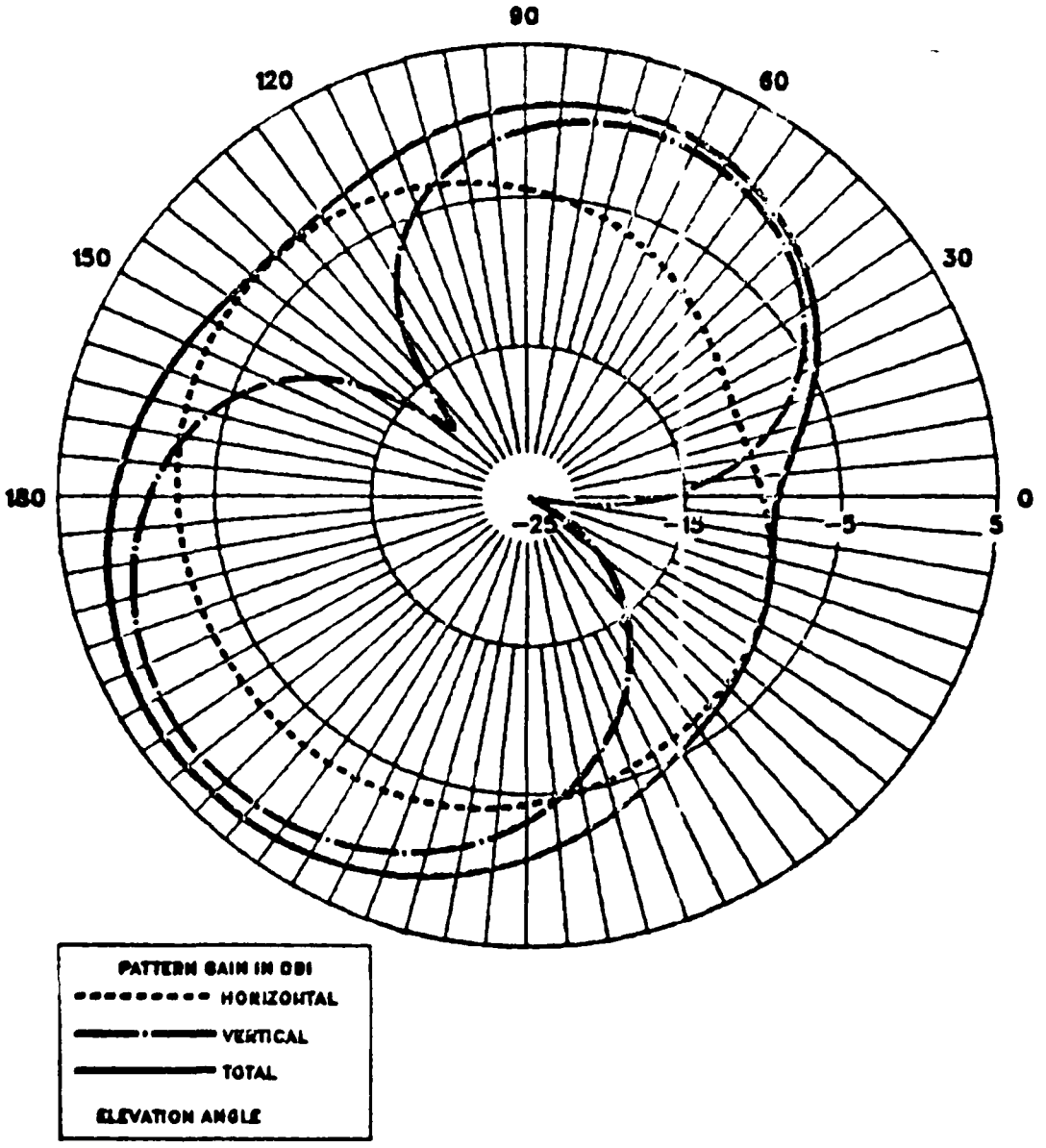

H65 IGUANA DATA RUN AT 13.974MHZ ON 8/25/87

COLLINS 437R-2 ANT, FREE SPACE, HORIZ CUT, THETA=90

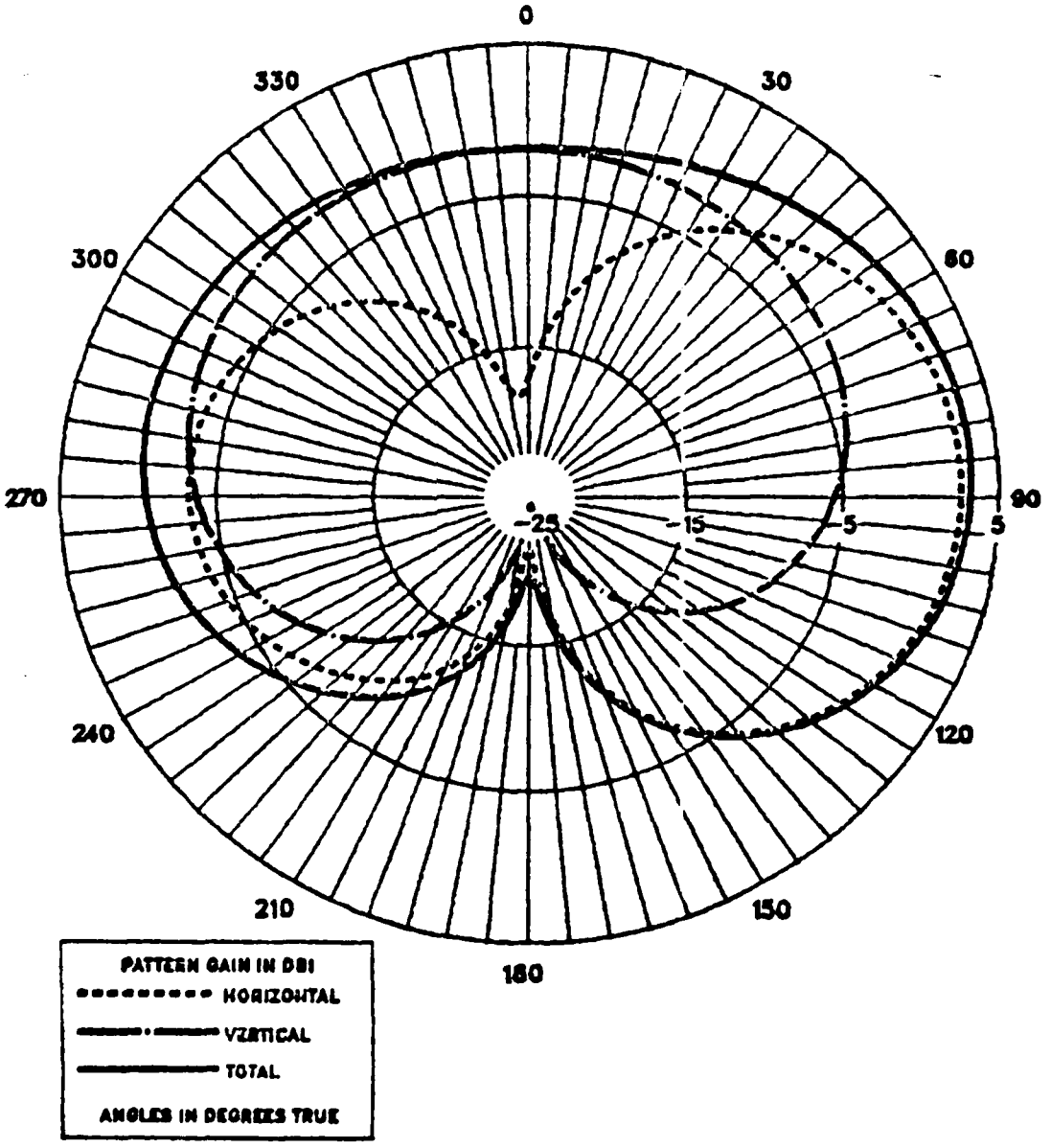

H65 IGUANA DATA RUN AT 13.974MHZ ON 8/25/87

COLLINS 437R-2 ANT, FREE SPACE, HORIZ CUT, THETA=26

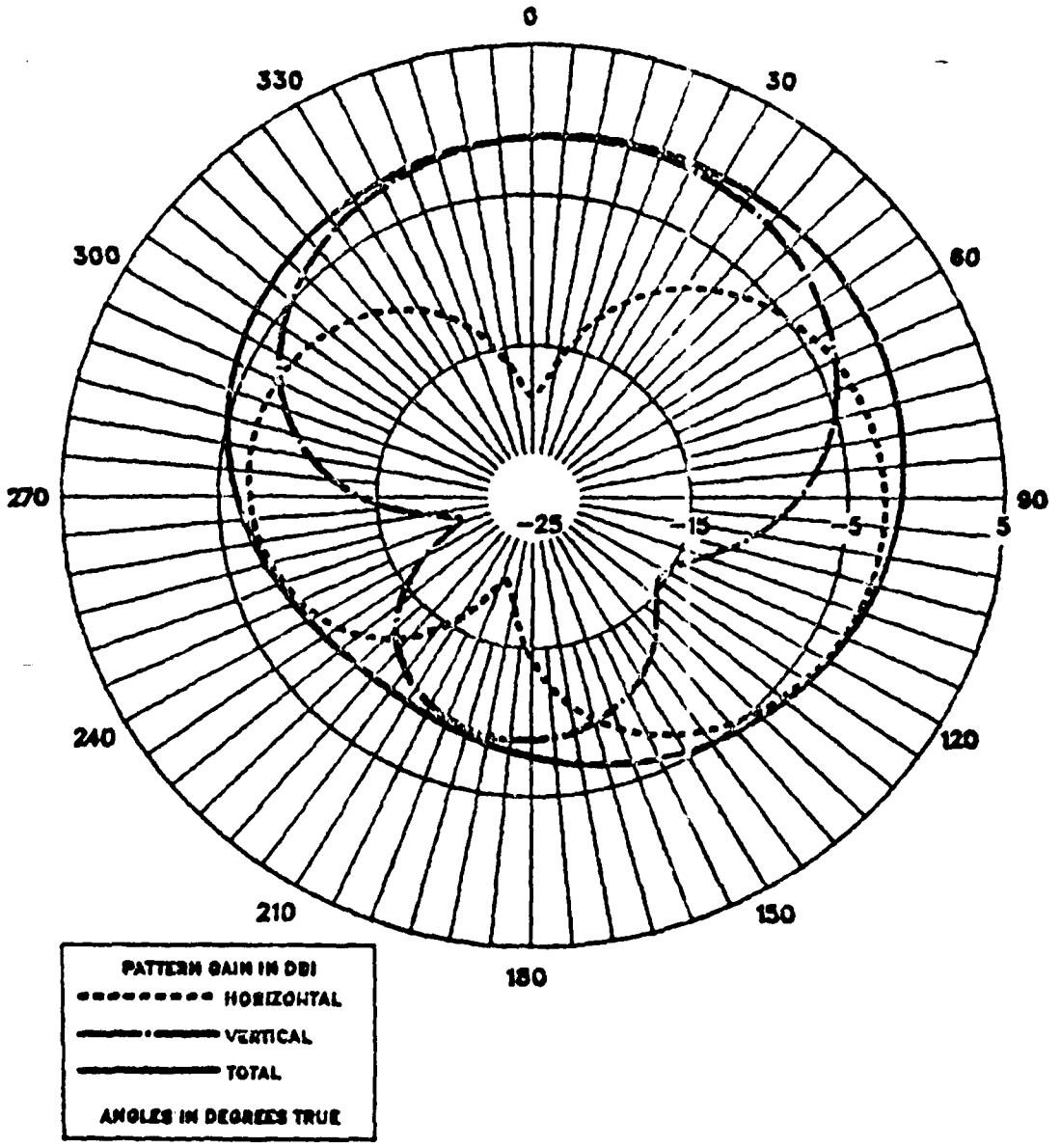

H65 IGUANA DATA RUN AT 13.974MHZ ON 8/25/87

COLLINS 437R-2 ANT, FREE SPACE, VERT CUT, PHI=0

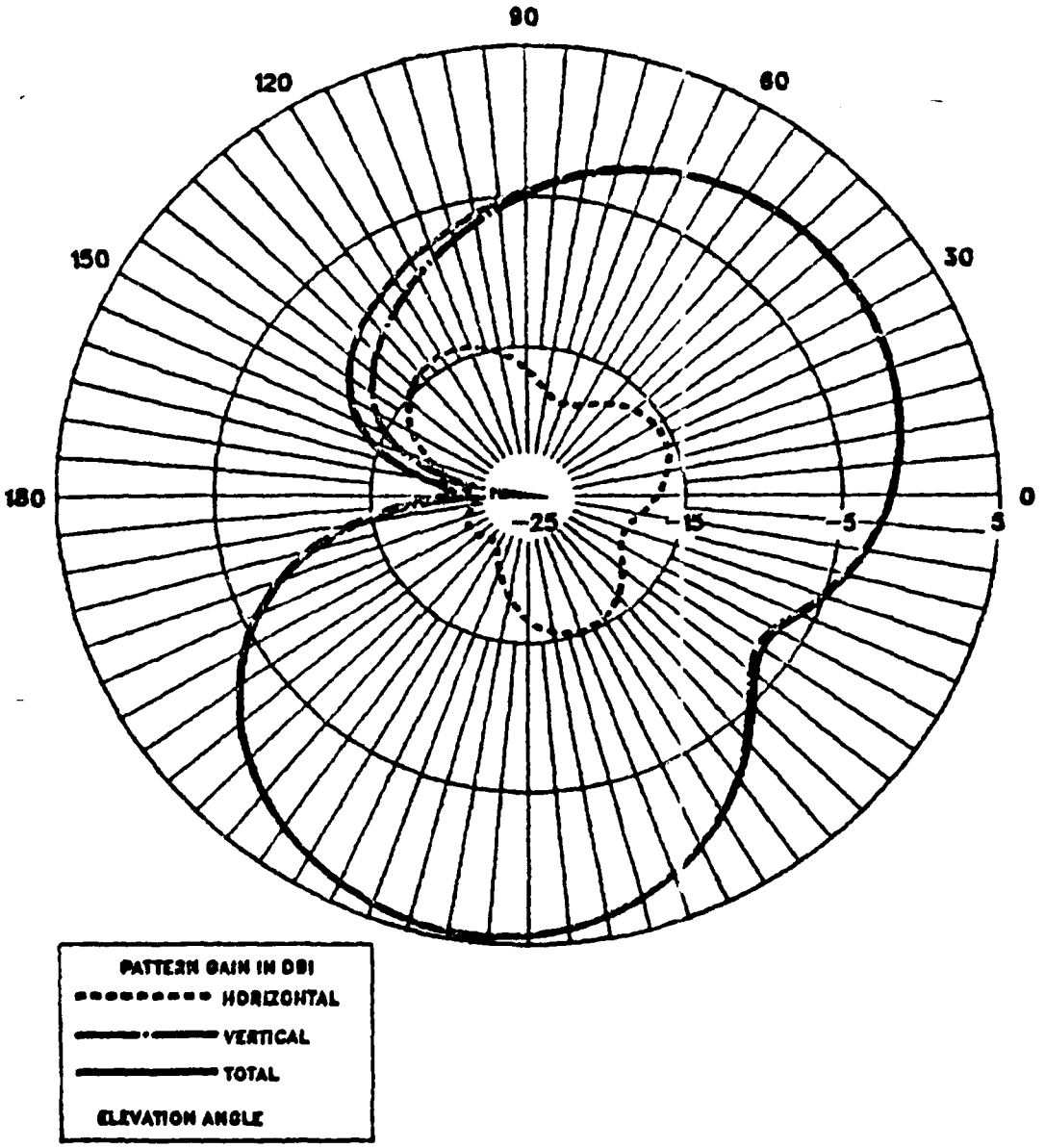

H65 IGUANA DATA RUN AT 13.974MHZ ON 8/25/87

COLLINS 437R-2 ANT, FREE SPACE, VERT CUT, PHI=45

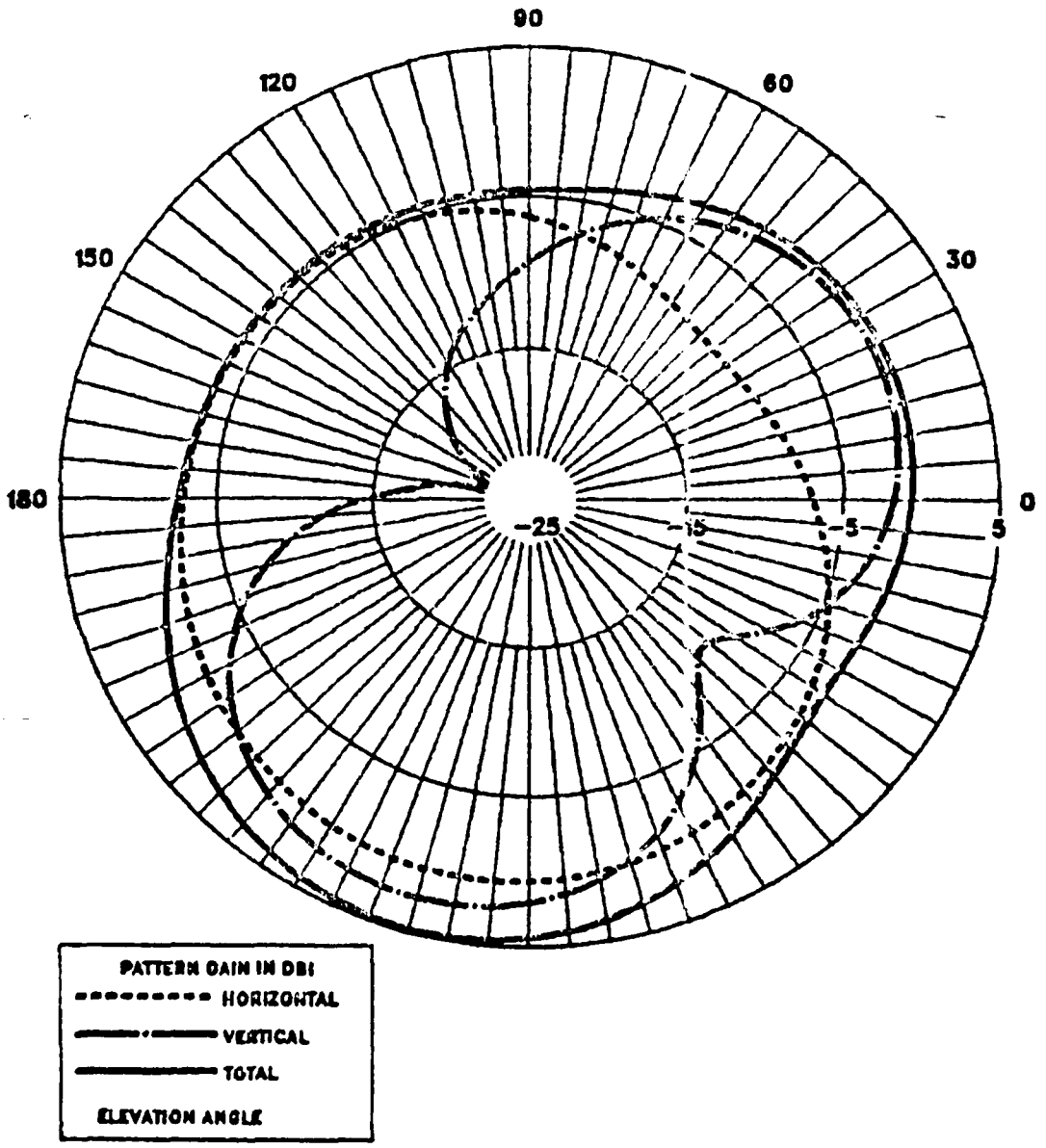

H65 IGUANA DATA RUN AT 13.974MHZ ON 8/25/87

ARMY-TYPE TUBE ANT, FREE SPACE, HORIZ CUT, THETA=90

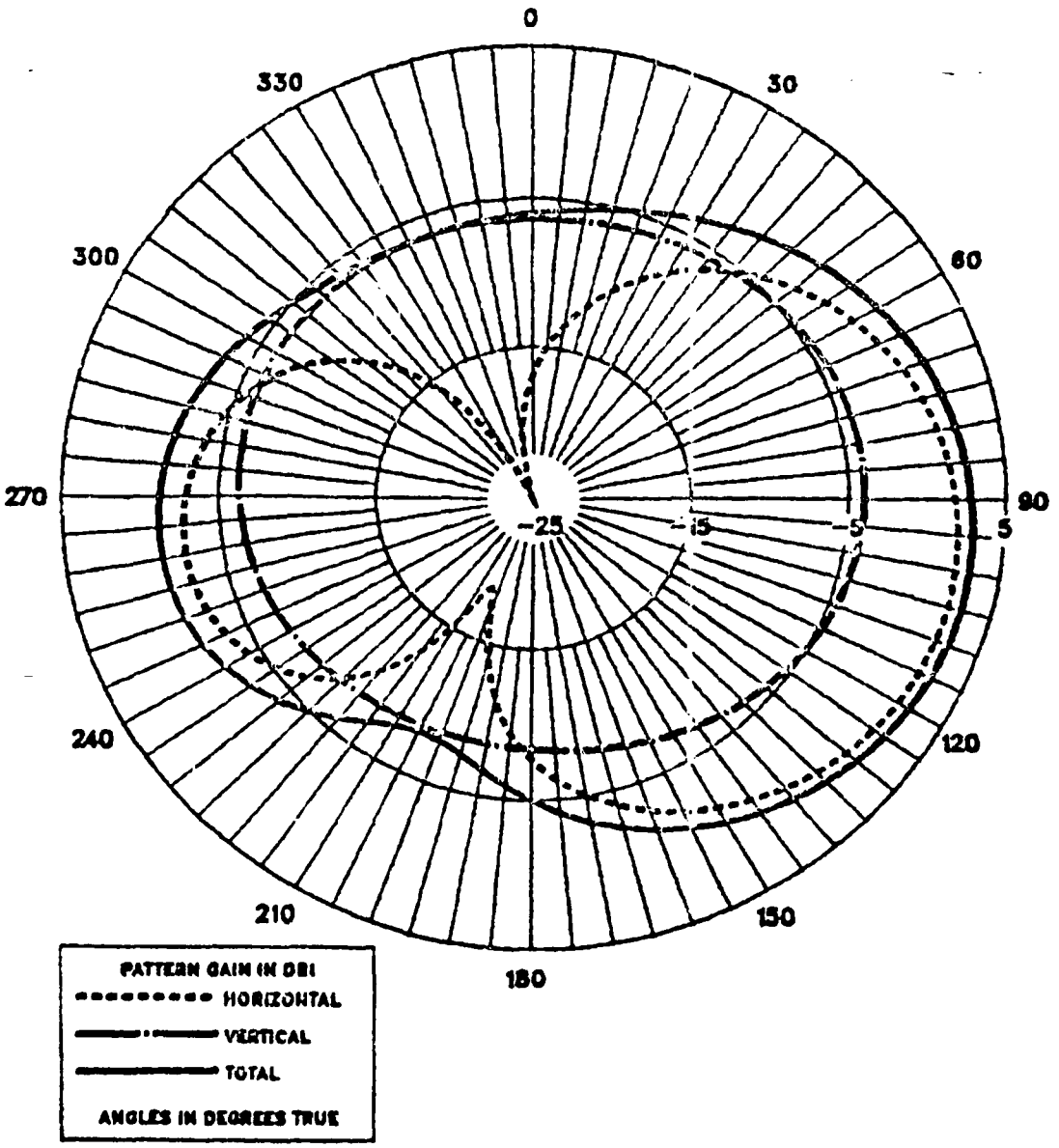

H65 IGUANA DATA RUN AT 13.974MHZ ON 8/25/87

ARMY-TYPE TUBE ANT, FREE SPACE, HORIZ CUT, THETA=26

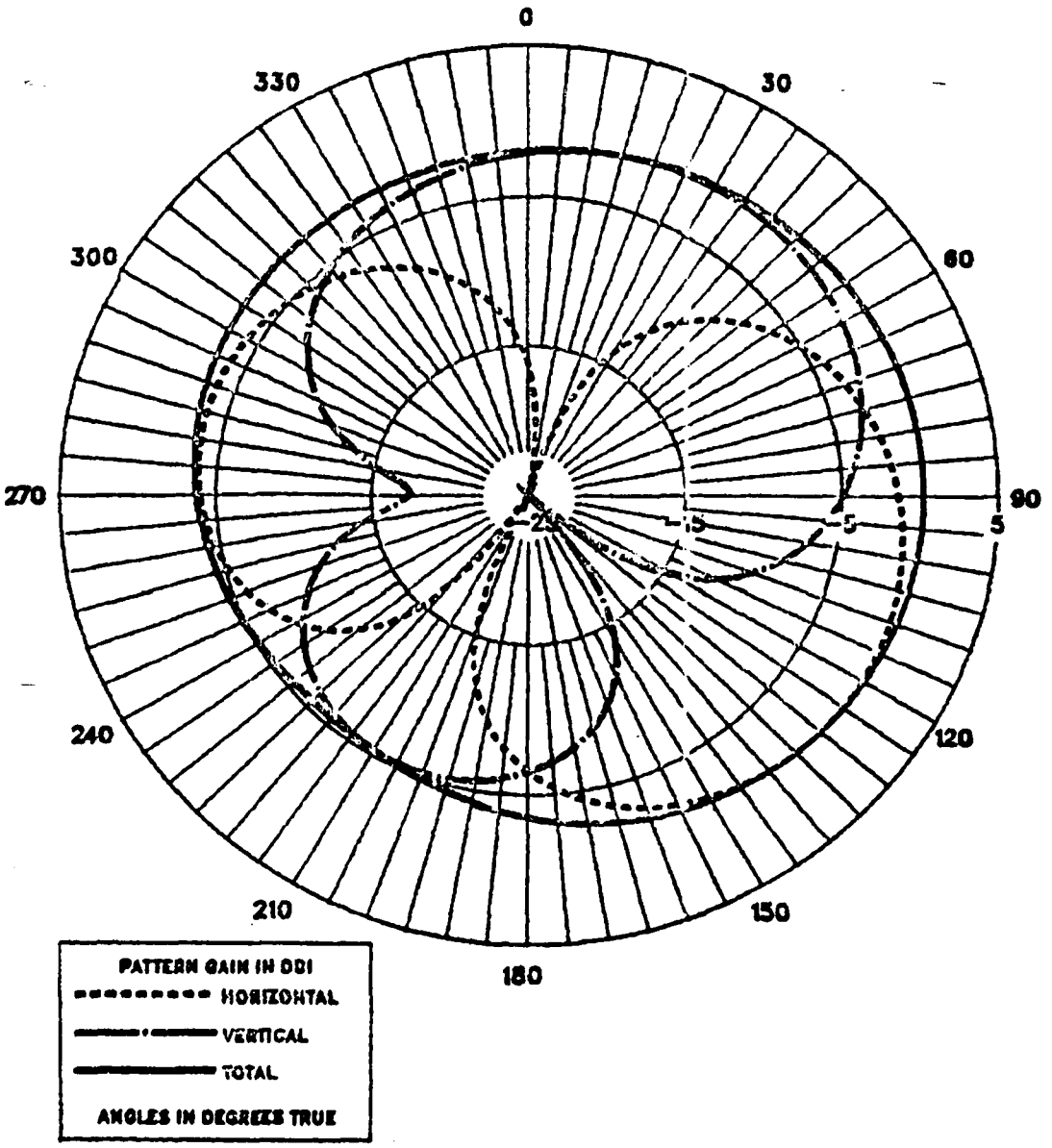

H65 IGUANA DATA RUN AT 13.974MHZ ON 8/25/87

ARMY-TYPE TUBE ANT, FREE SPACE, VERT CUT, PHI=0

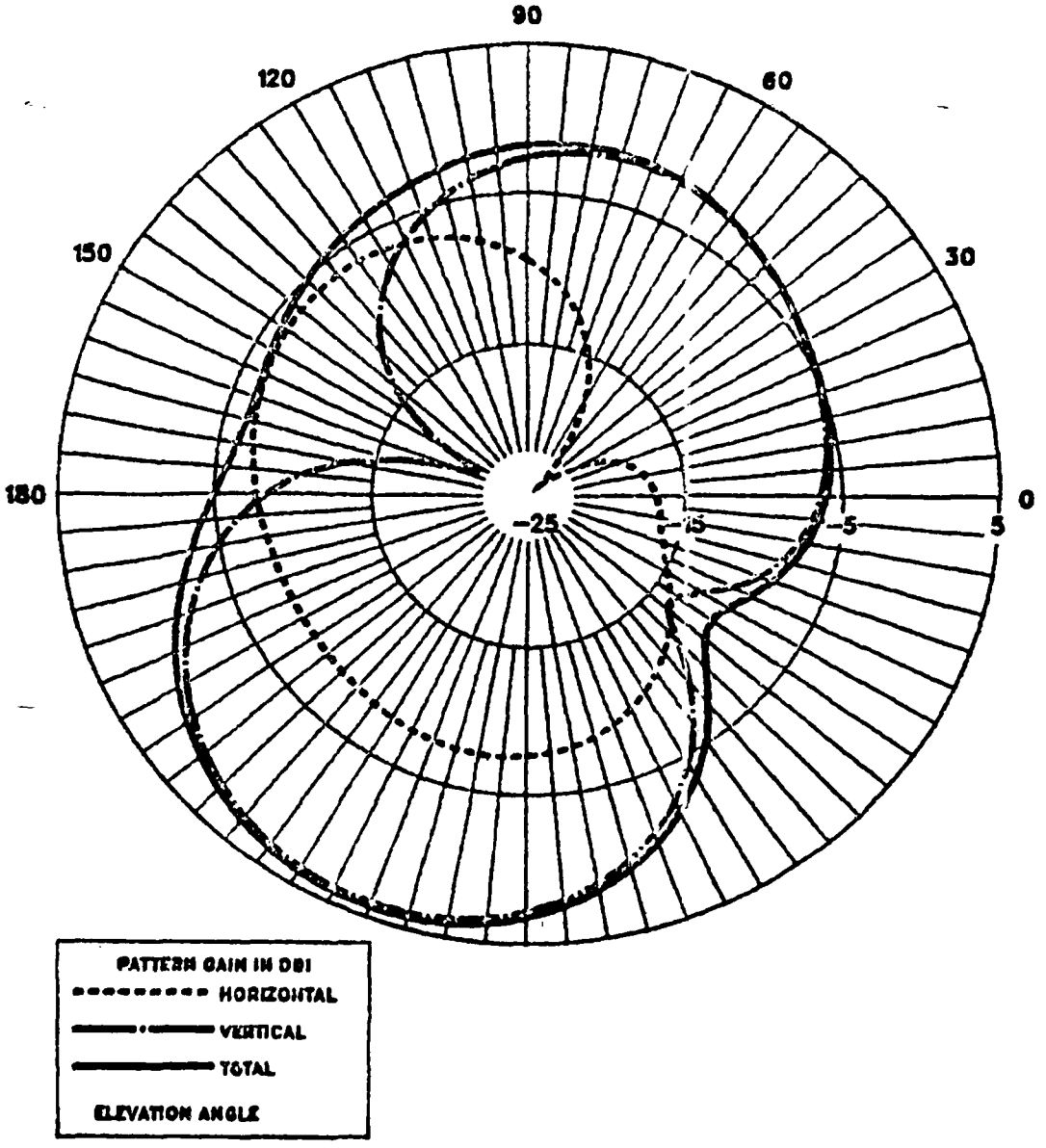

H65 IGUANA DATA RUN AT 13.974MHZ ON 8/25/87

ARMY-TYPE TUBE ANT, FREE SPACE, VERT CUT, PHI=45

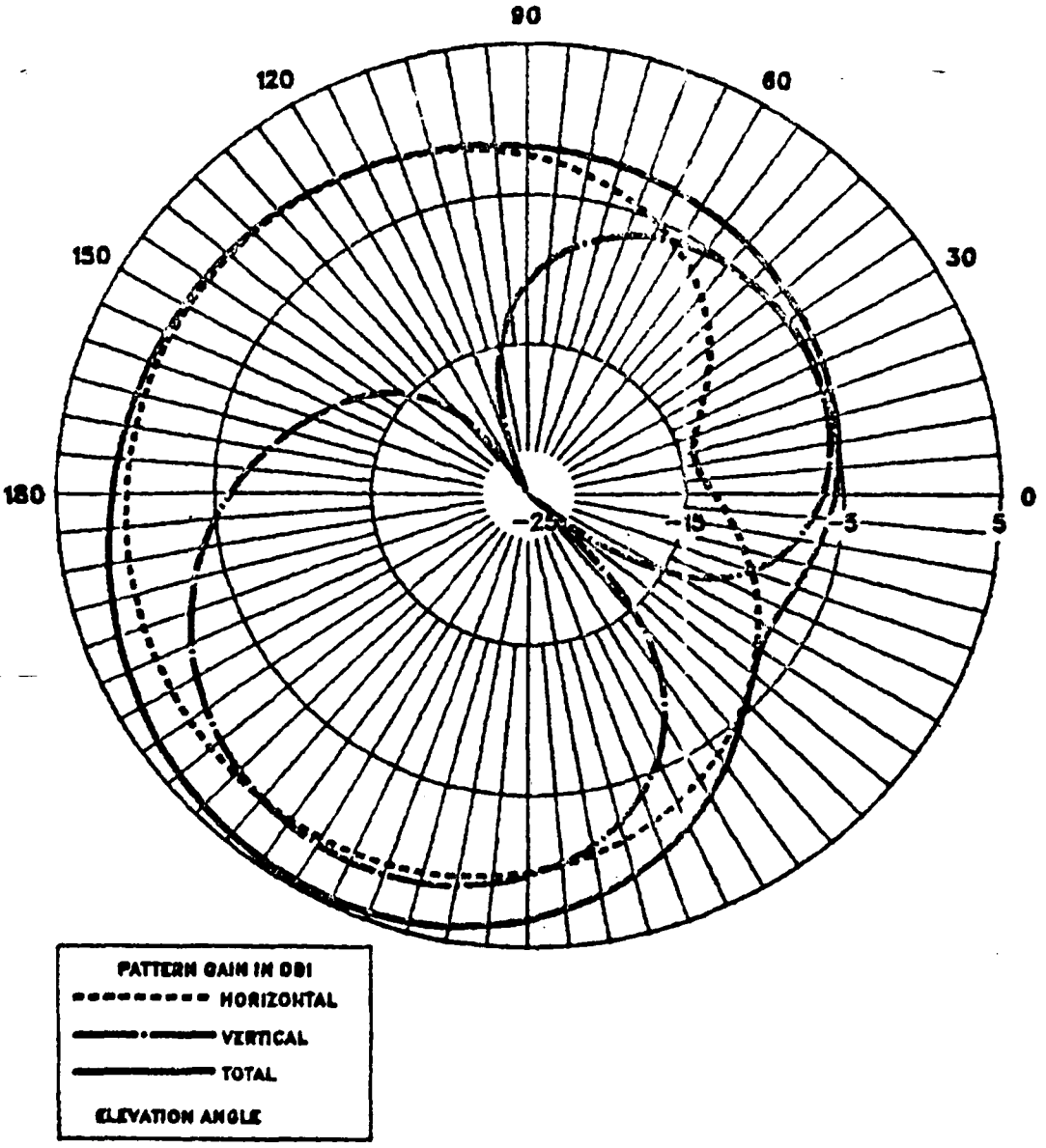

H65 IGUANA DATA RUN AT 13.974MHZ ON 8/25/87

LONG SHUNTED LOOP, FREE SPACE, HORIZ CUT, THETA=90

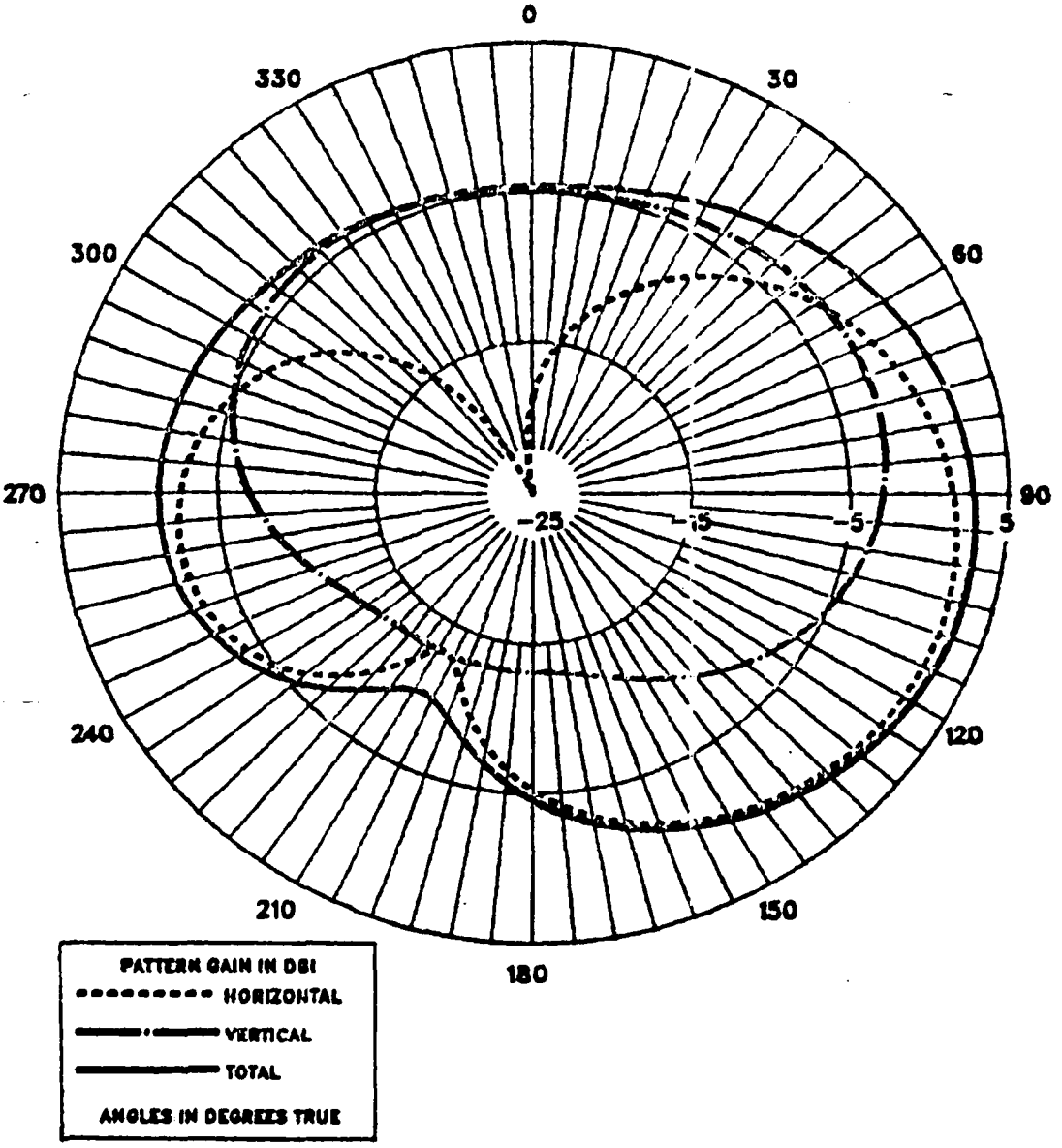

H65 IGUANA DATA RUN AT 13.974MHZ ON 8/25/87

LONG SHUNTED LOOP, FREE SPACE, HORIZ CUT, THETA=26

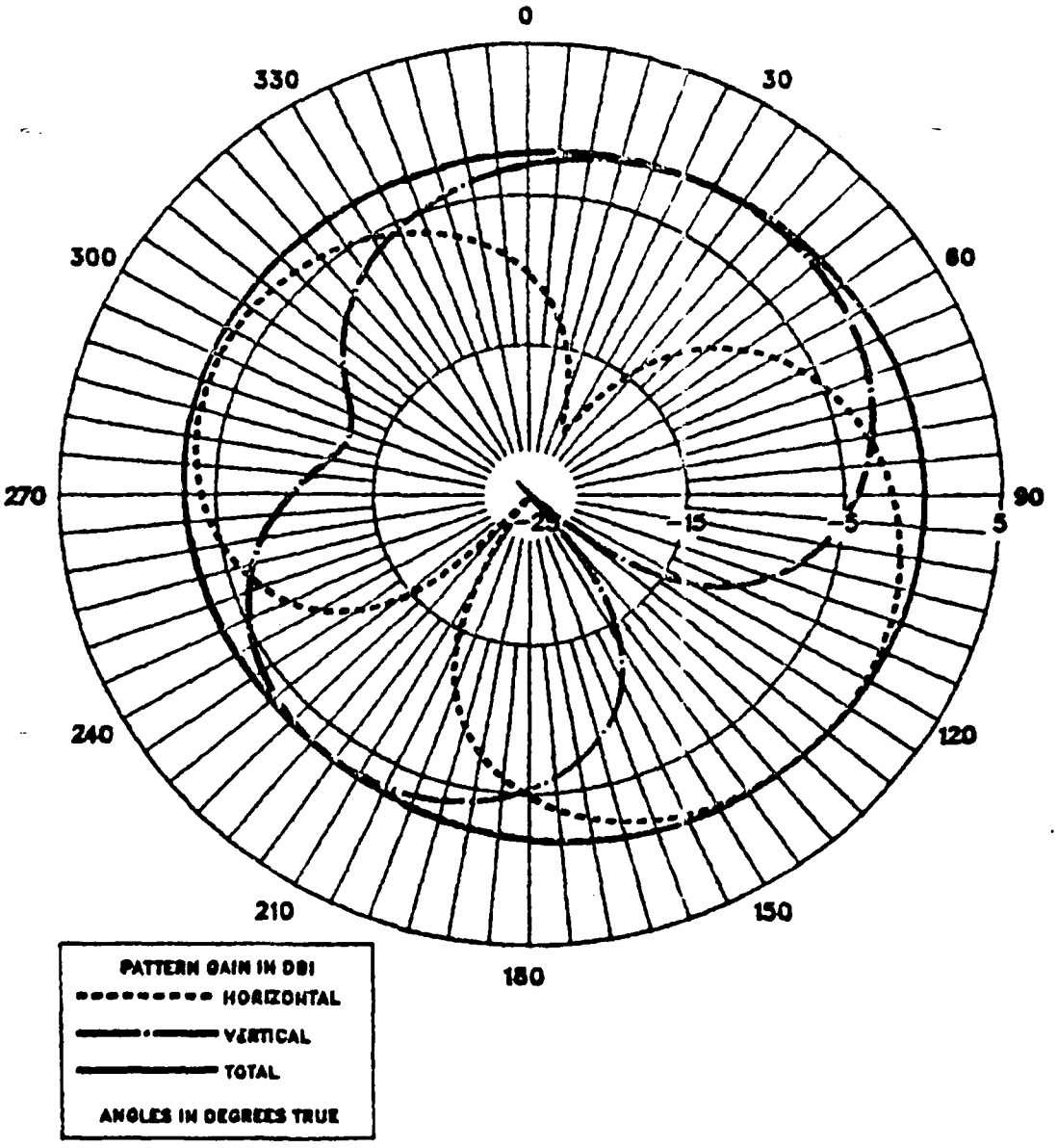

H65 IGUANA DATA RUN AT 13.974MHZ ON 8/25/87

LONG SHUNTED LOOP, FREE SPACE, VERT CUT, PHI=0

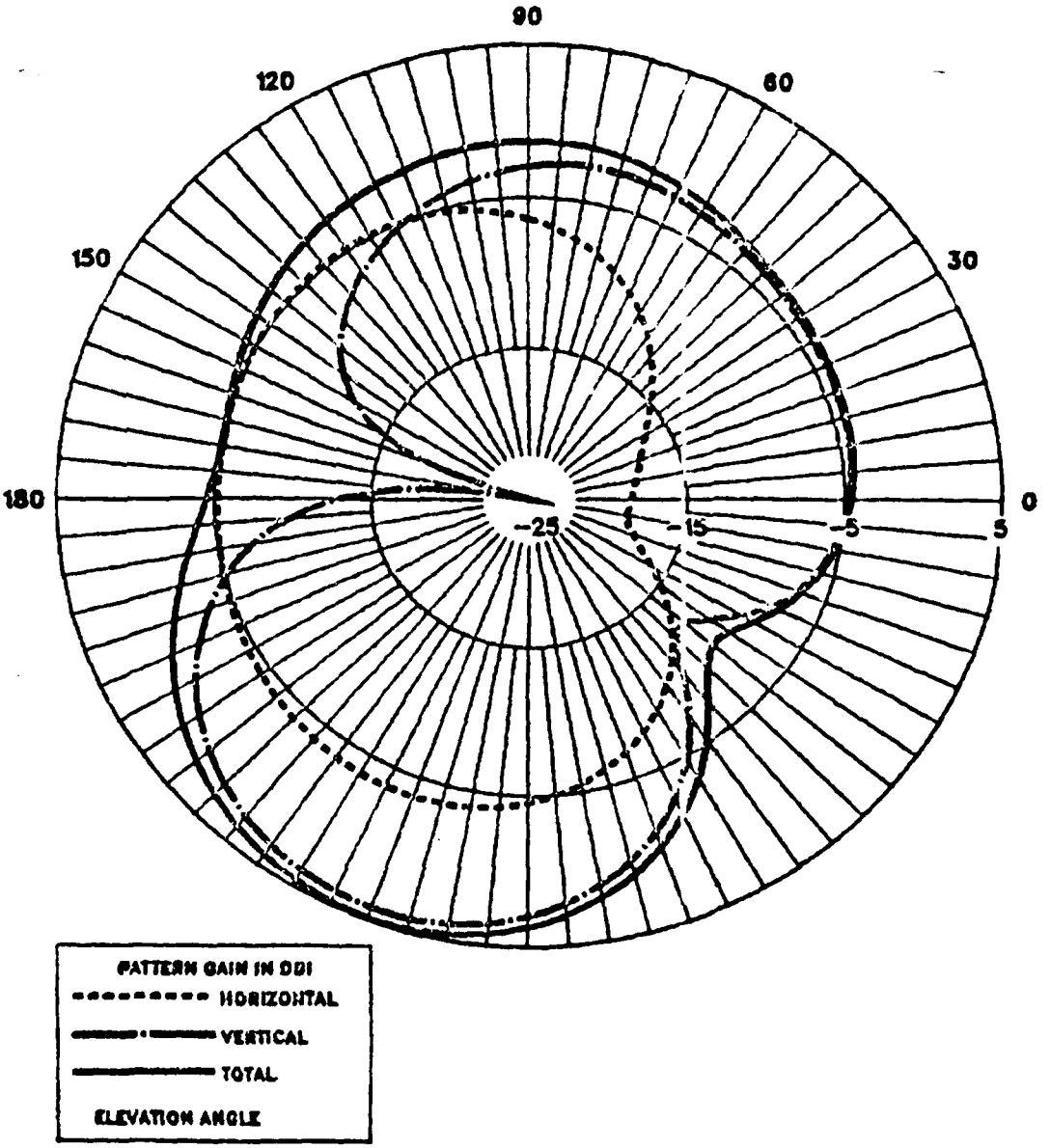

H65 IGUANA DATA RUN AT 13.974MHZ ON 8/25/87

LONG SHUNTED LOOP, FREE SPACE, VERT CUT, PHI=45

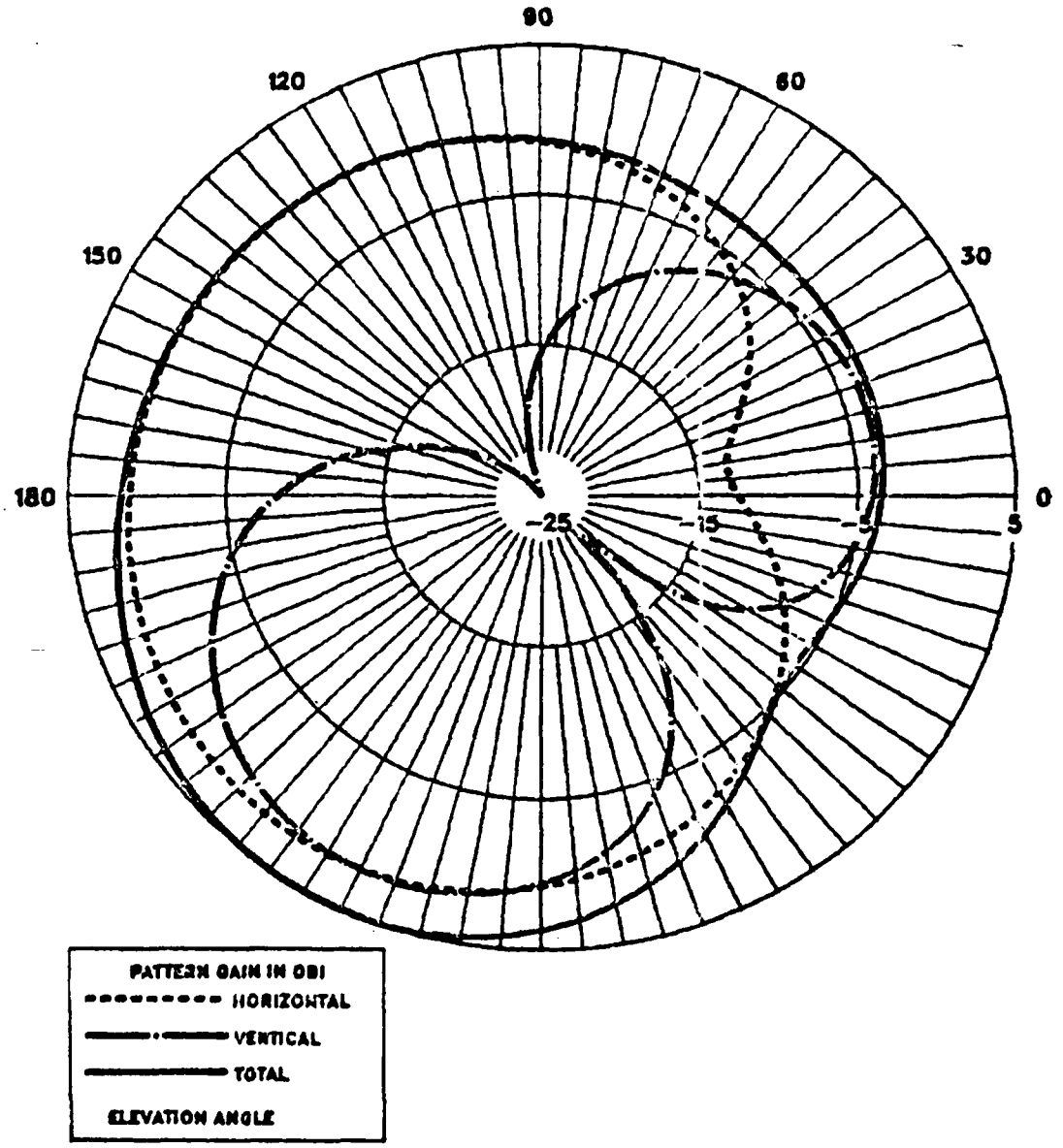

H65 IGUANA DATA RUN AT 18.1MHZ ON 8/18/87

LW SPACED 12" FROM A/C, FREE SPACE, HORIZ CUT, THETA=90

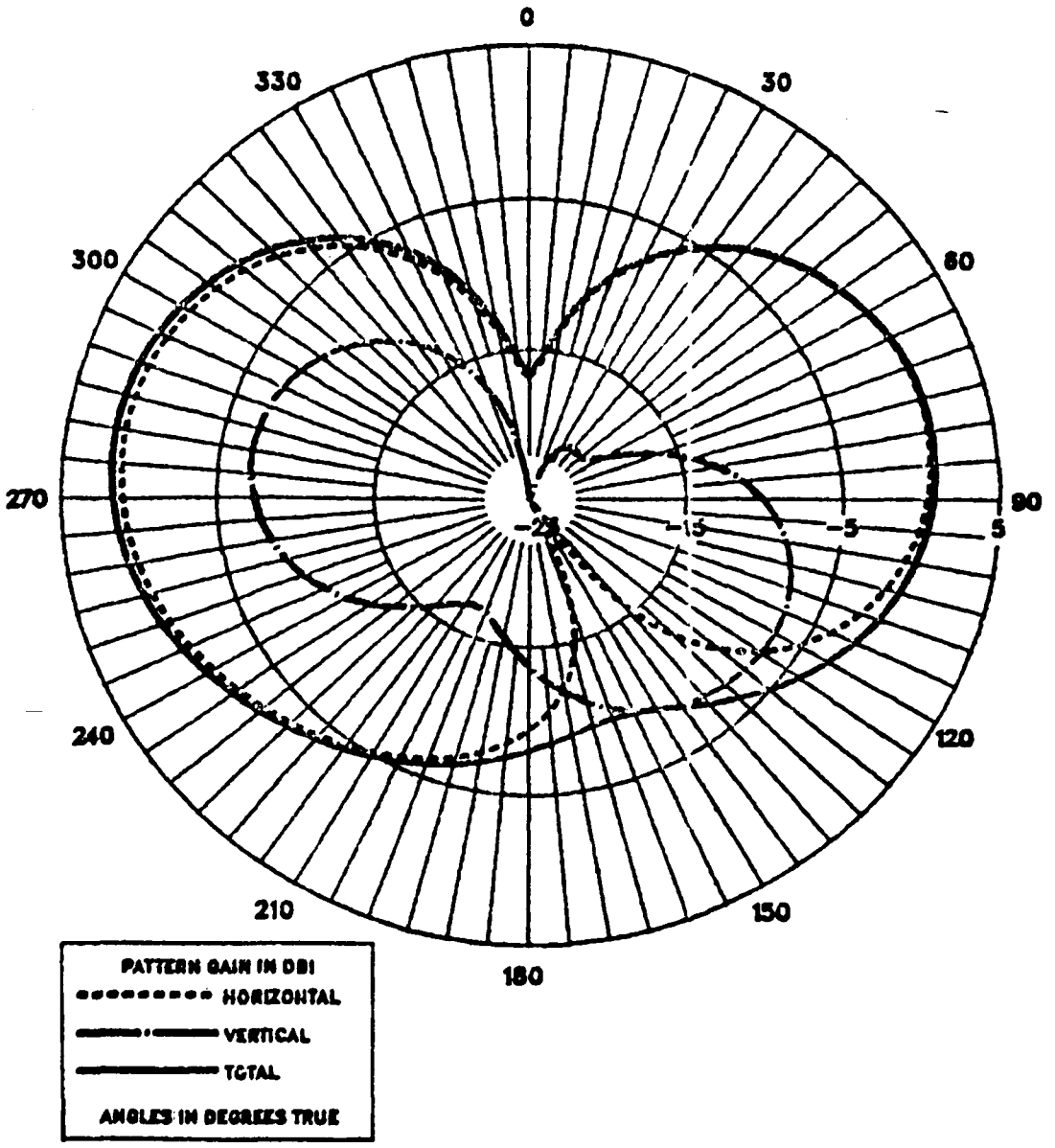

H65 IGUANA DATA RUN AT 18.1MHZ ON 8/18/87

LW SPACED 12" FROM A/C, FREE SPACE, HORIZ CUT, THETA=26

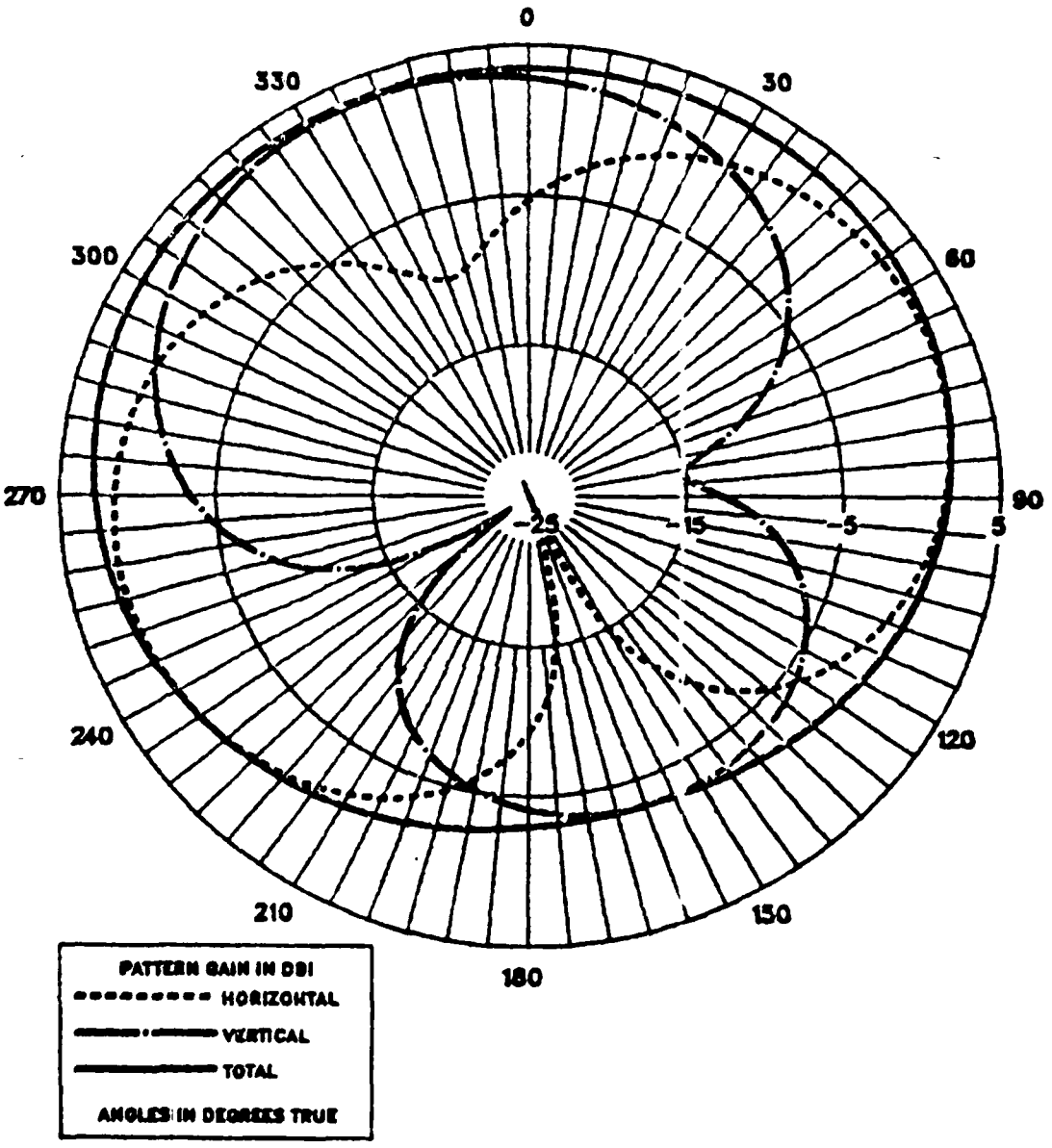

H65 IGUANA DATA RUN AT 18.1MHZ ON 8/18/87

LW SPACED 12" FROM A/C, FREE SPACE, VERT CUT, PHI=0

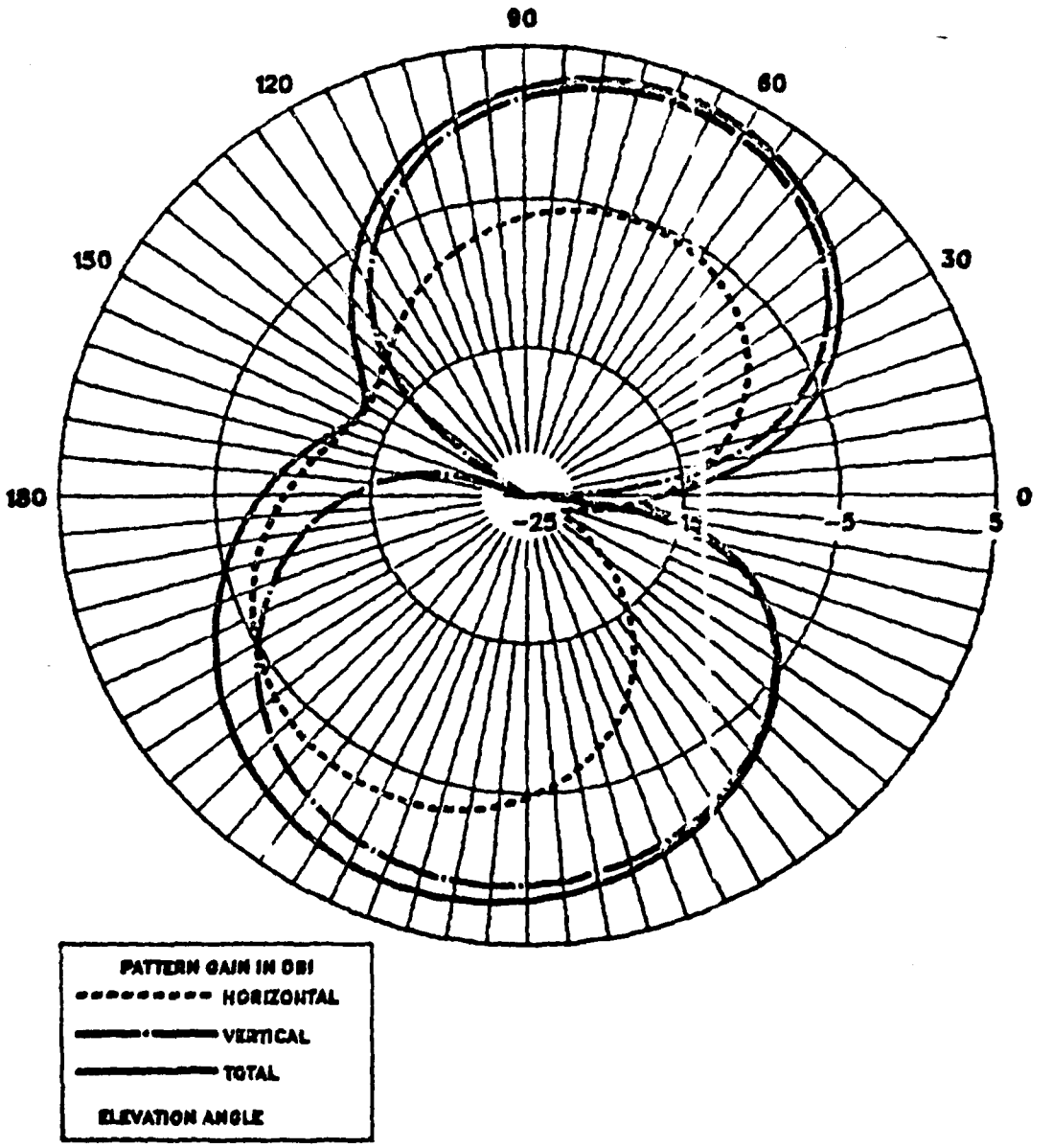

H65 IGUANA DATA RUN AT 18.1MHZ ON 8/18/87

LW SPACED 12" FROM A/C, FREE SPACE, VERT CUT, PHI=45

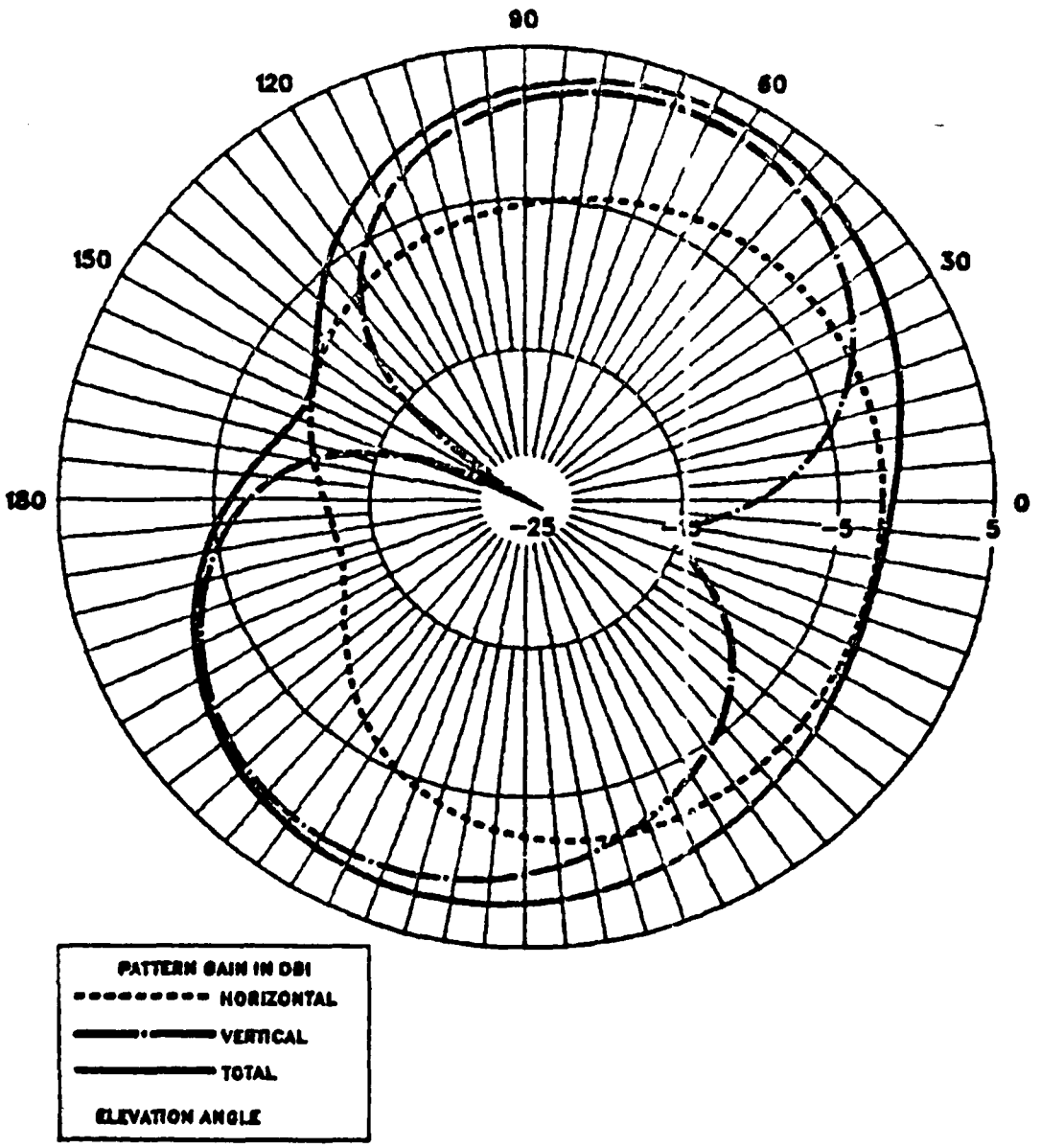

H65 IGUANA DATA RUN AT 18.1MHZ ON 8/15/87

COLLINS 437R-2 ANT, FREE SPACE, HORIZ CUT, THETA=90

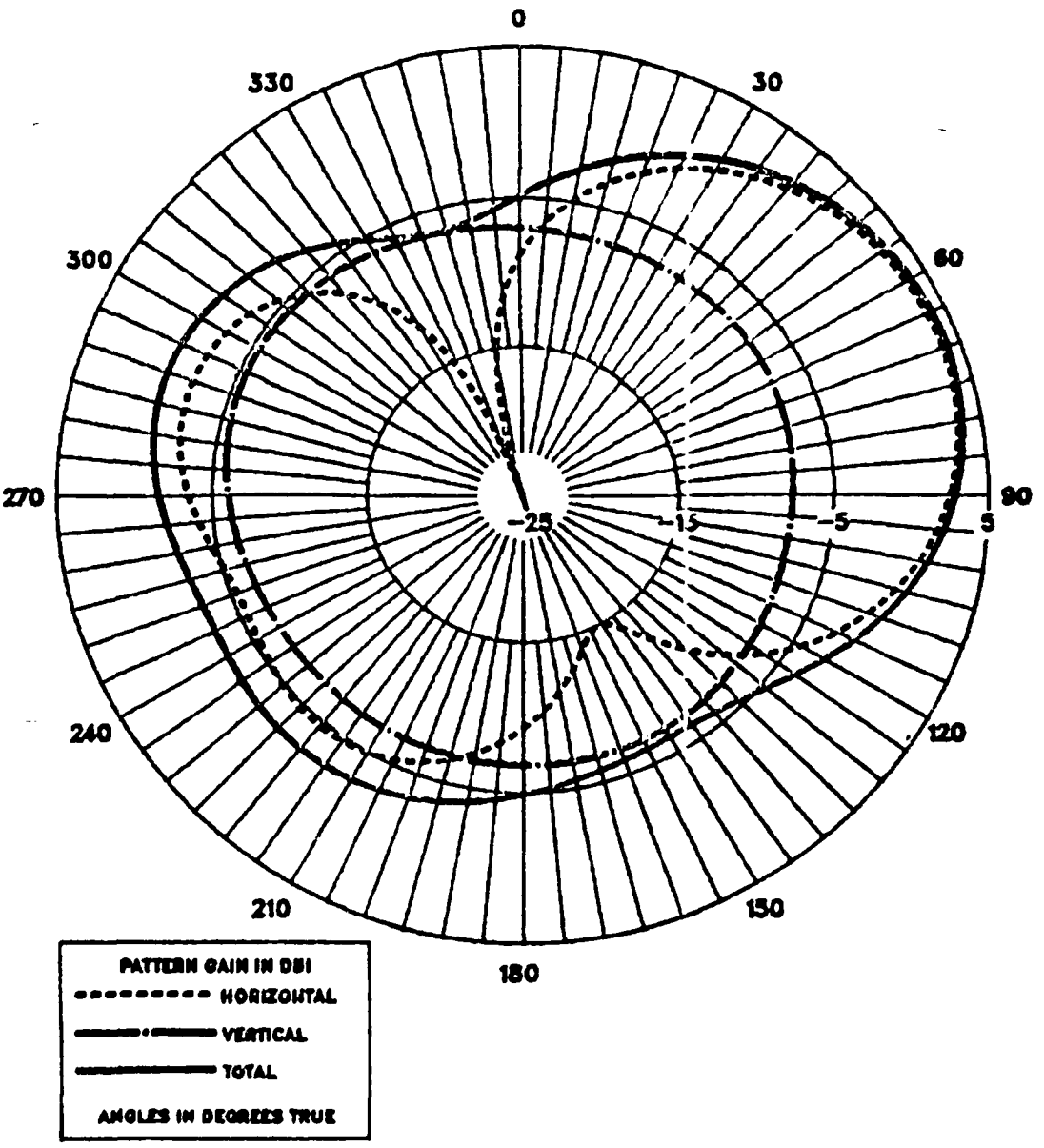

H65 IGUANA DATA RUN AT 18.1MHZ ON 8/15/87

COLLINS 437R-2 ANT, FREE SPACE, HORIZ CUT, THETA=26

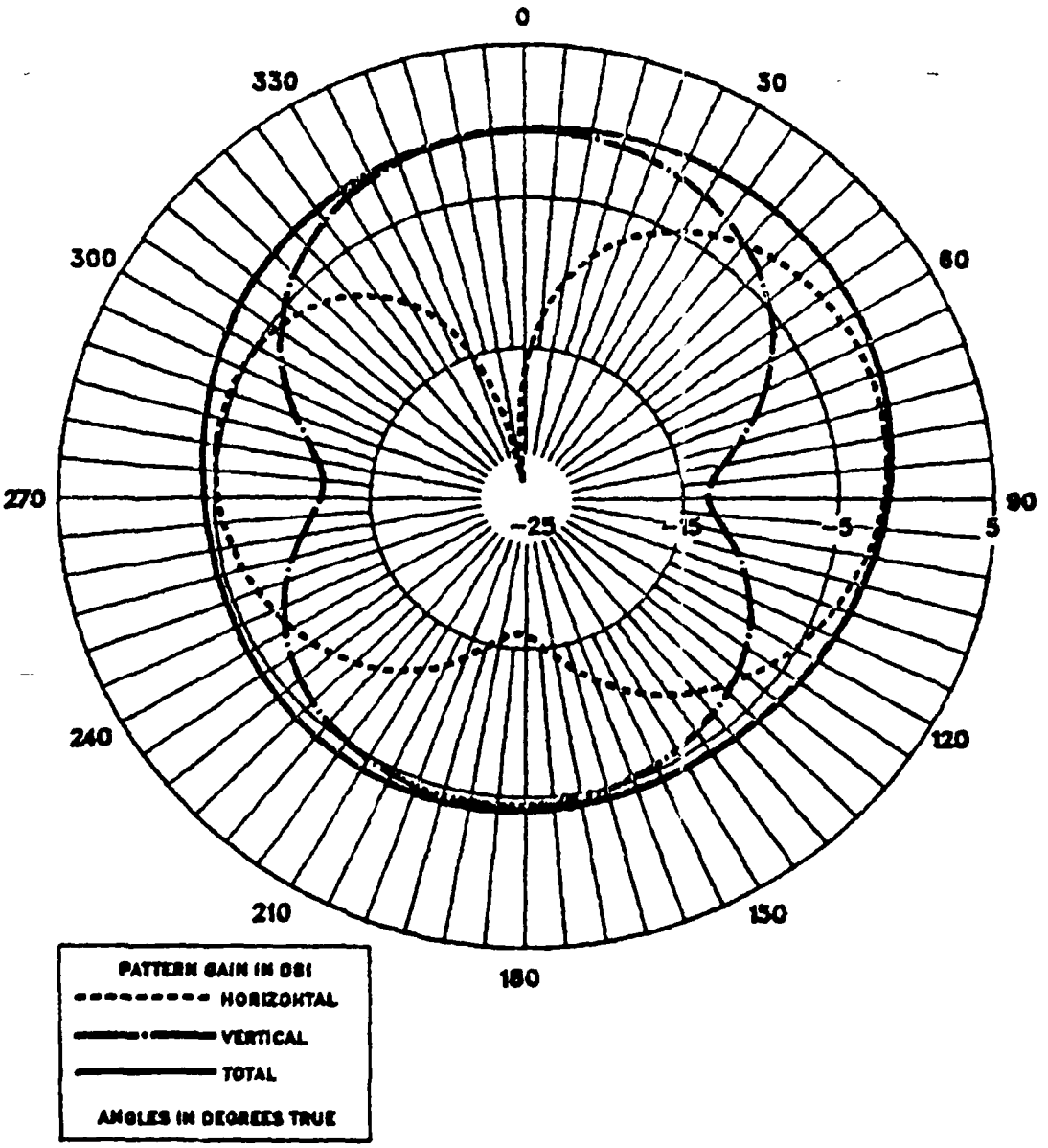

H65 IGUANA DATA RUN AT 18.1MHZ ON 8/15/87

COLLINS 437R-2 ANT, FREE SPACE, VERT CUT, PHI=0

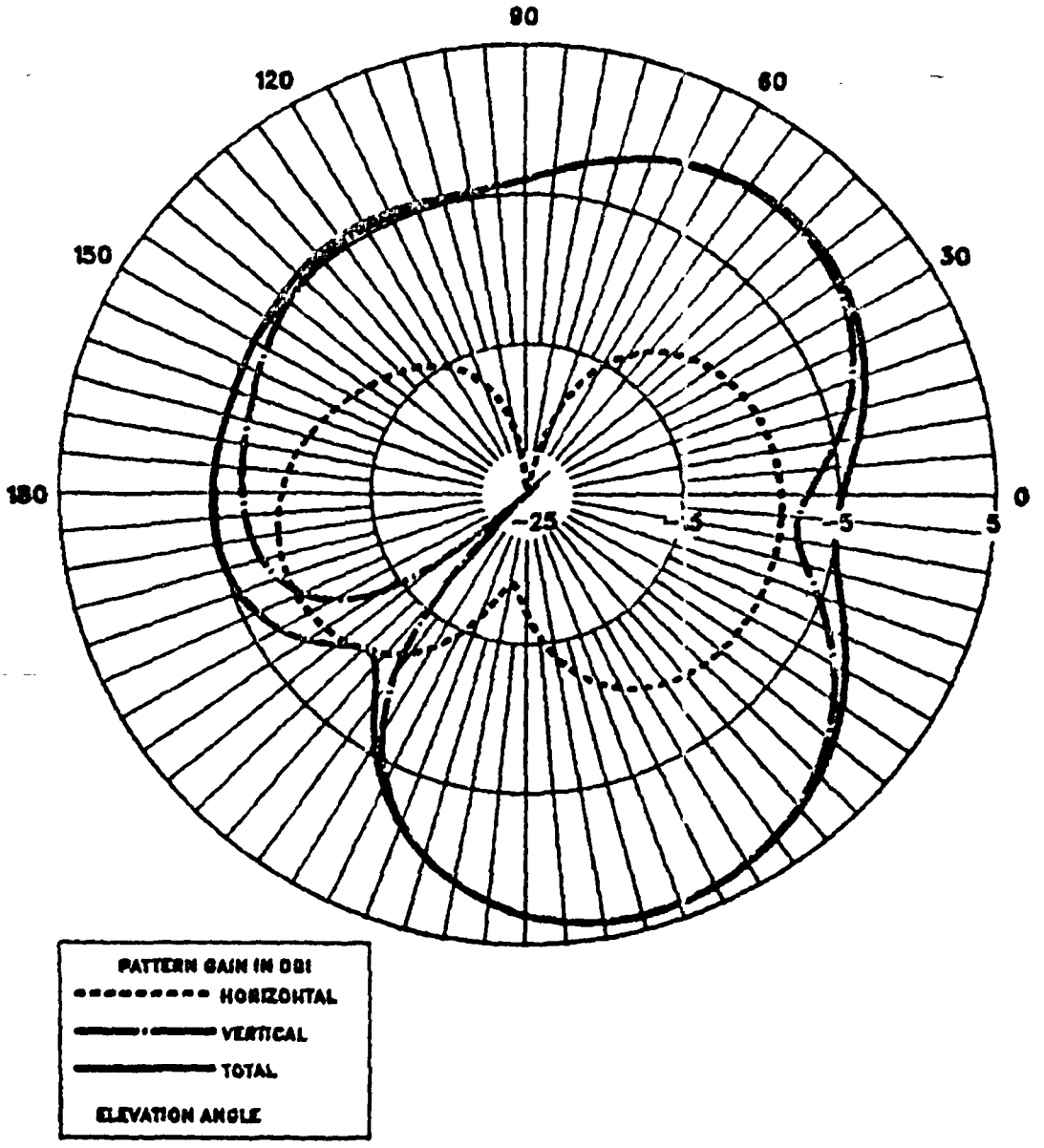

H65 IGUANA DATA RUN AT 18.1MHZ ON 8/15/87

COLLINS 437R-2 ANT, FREE SPACE, VERT CUT, PHI=45

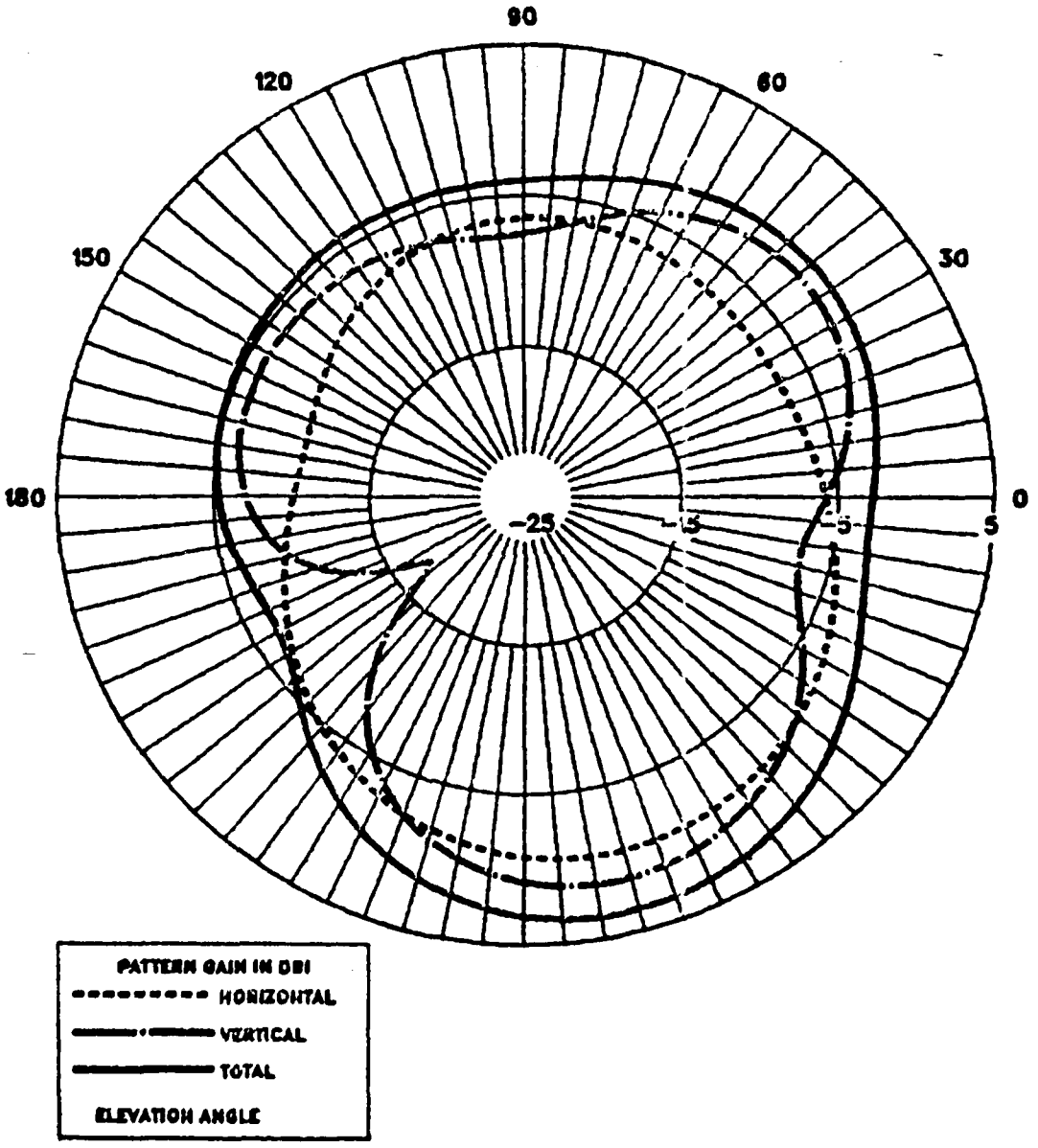

H65 IGUANA DATA RUN AT 18.1MHZ ON 8/15/87

ARMY-TYPE TUBE ANT, FREE SPACE, HORIZ CUT, THETA=90

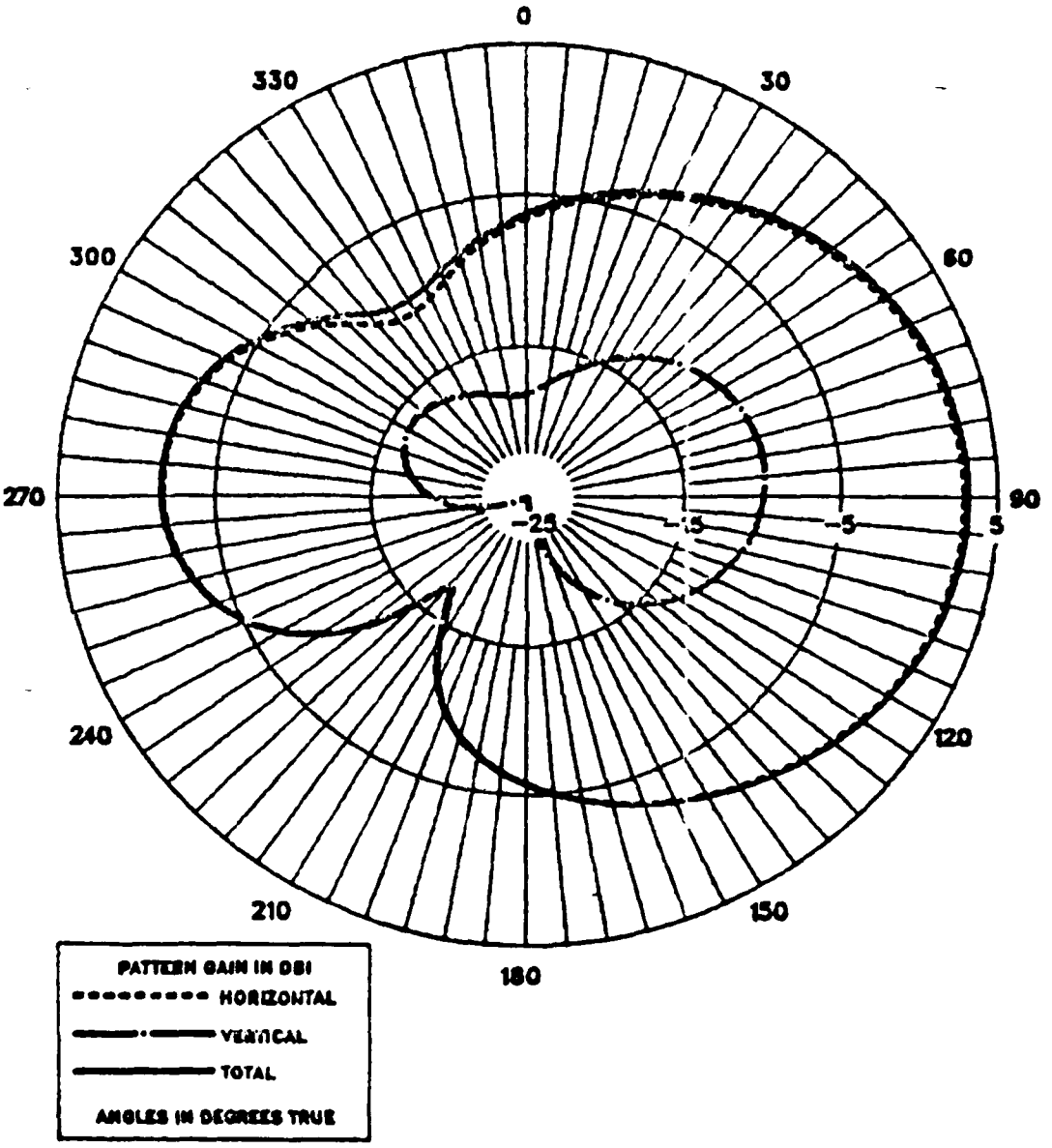

H65 IGUANA DATA RUN AT 18.1MHZ ON 8/15/87

ARMY–TYPE TUBE ANT, FREE SPACE, HORIZ CUT, THETA=26

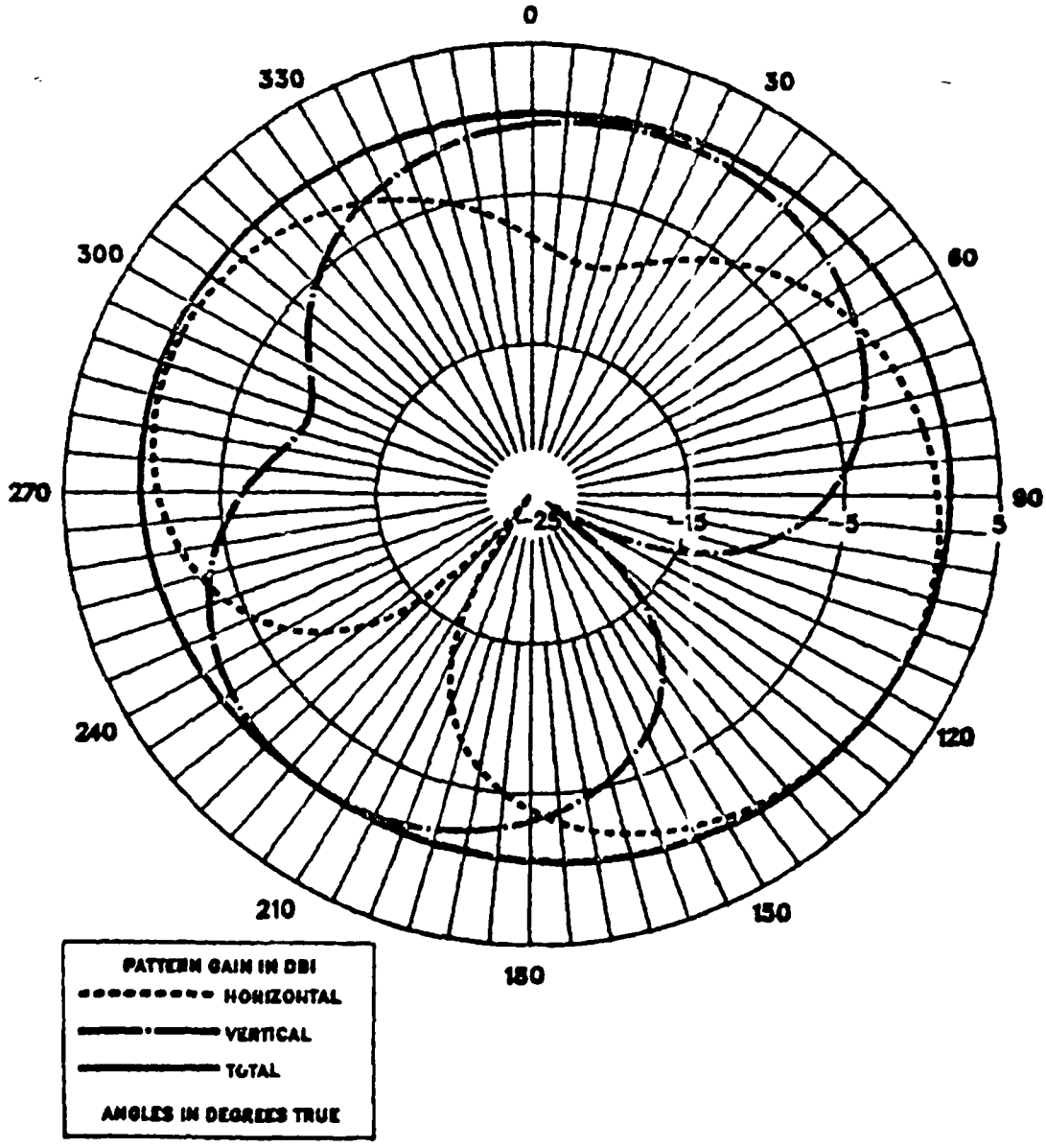

H65 IGUANA DATA RUN AT 18.1MHZ ON 8/15/87

ARMY-TYPE TUBE ANT, FREE SPACE, VERT CUT, PHI=0

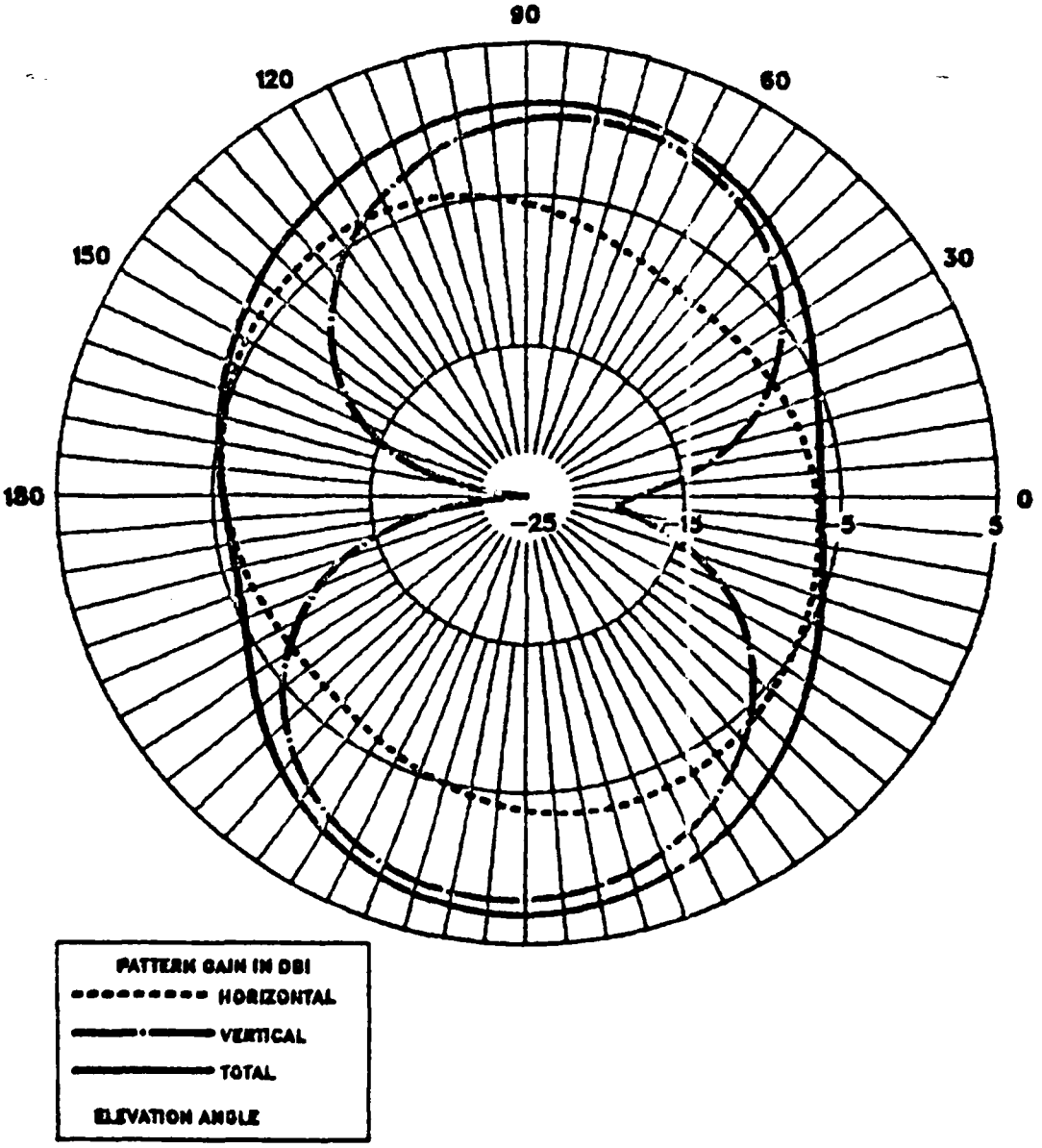

H65 IGUANA DATA RUN AT 18.1MHZ ON 8/15/87

ARMY-TYPE TUBE ANT, FREE SPACE, VERT CUT, PHI=45

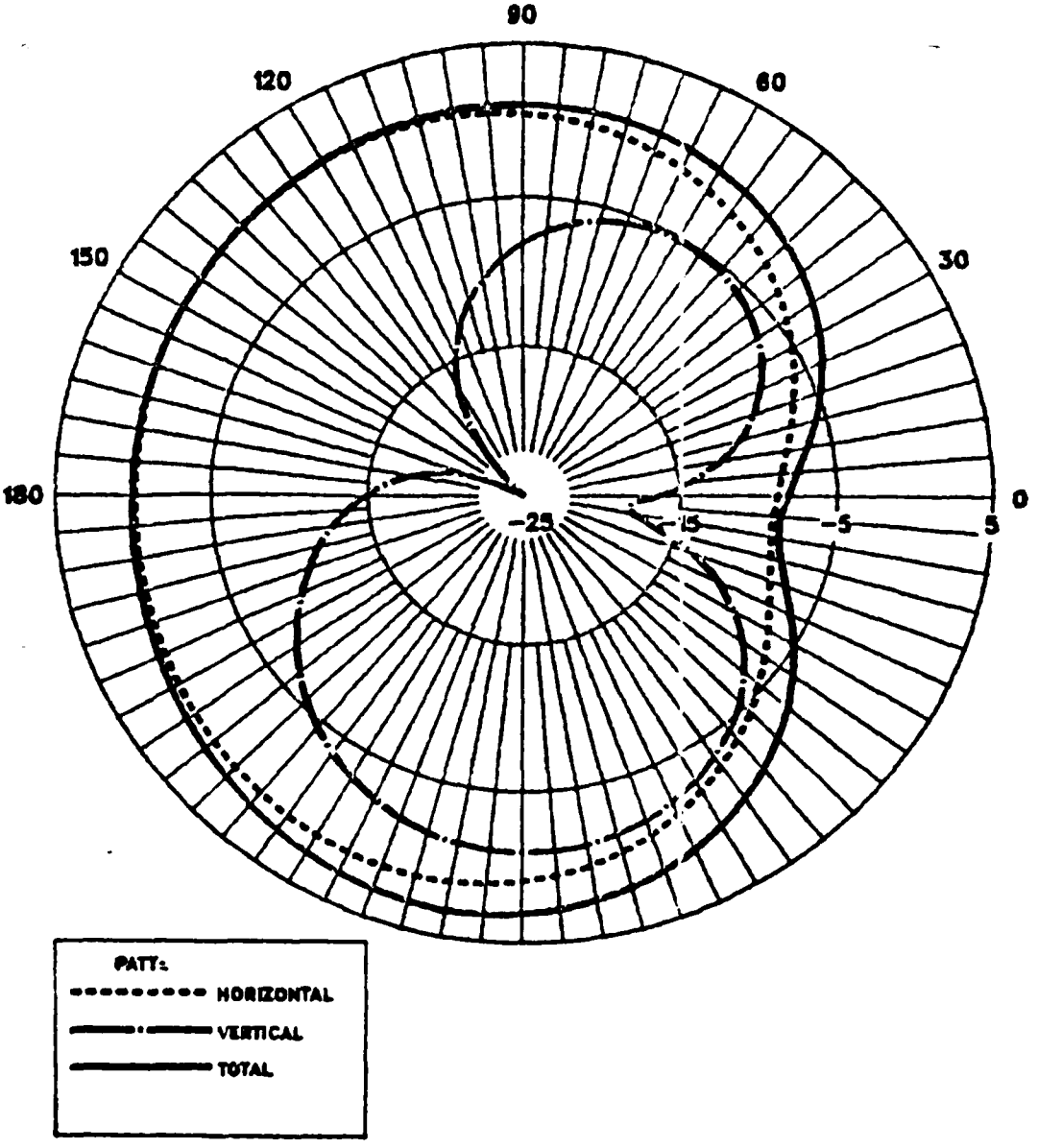

H65 IGUANA DATA RUN AT 18.1MHZ ON 8/15/87

LONG SHUNTED LOOP, FREE SPACE, HORIZ CUT, THETA=90

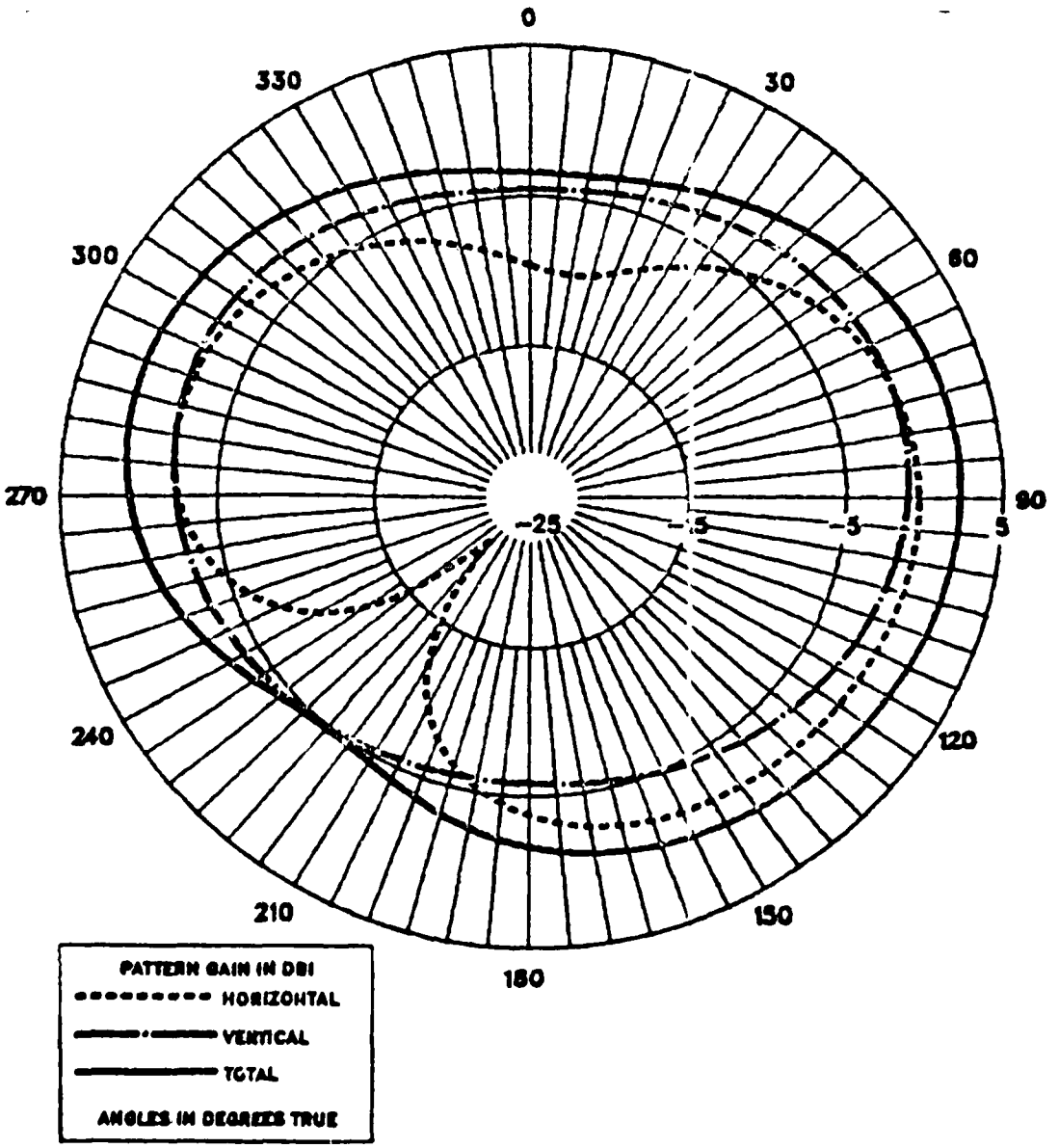

H65 IGUANA DATA RUN AT 18.1MHZ ON 8/15/87

LONG SHUNTED LOOP, FREE SPACE, HORIZ CUT, THETA=26

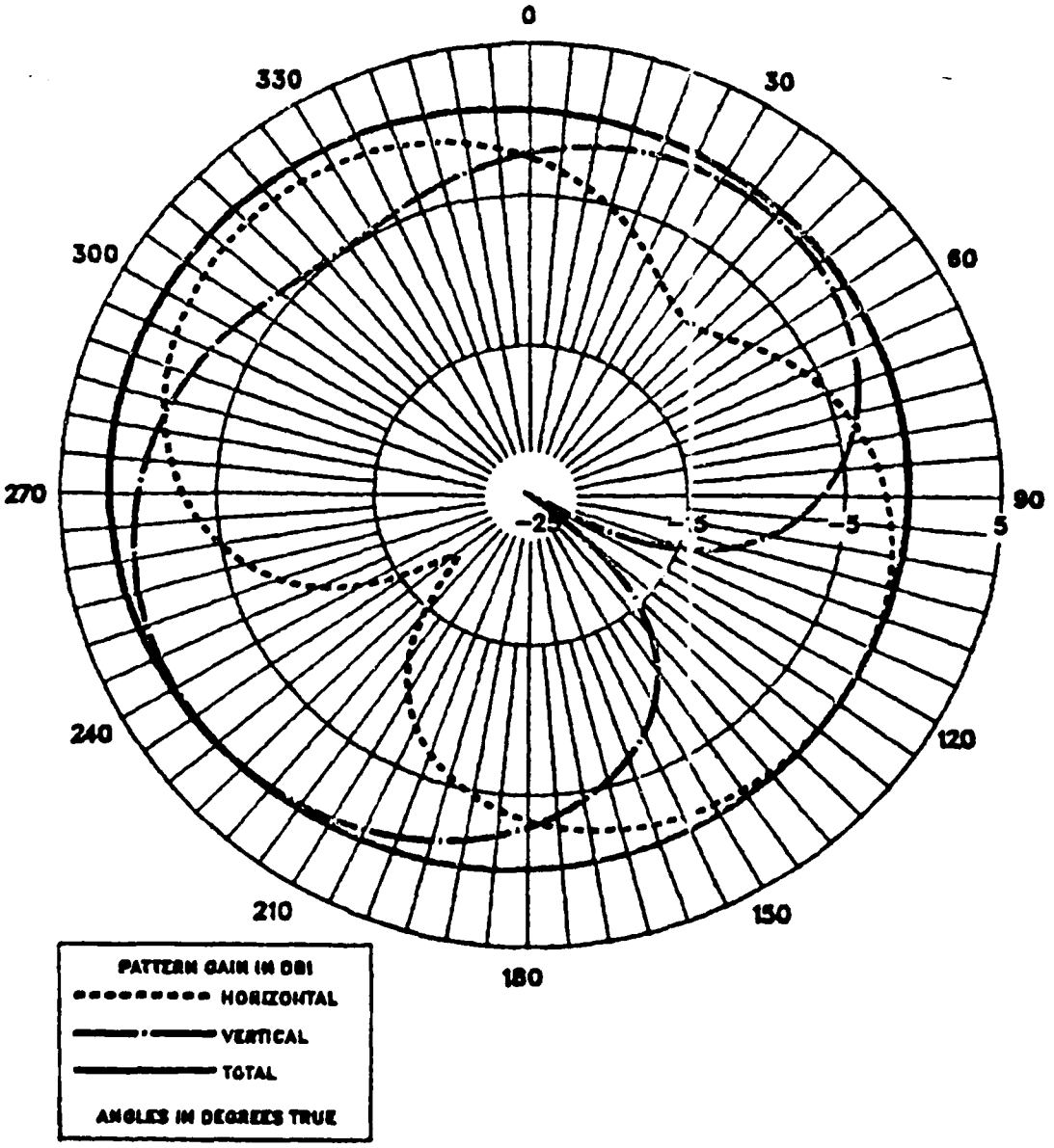

H65 IGUANA DATA RUN AT 18.1MHZ ON 8/15/87

LONG SHUNTED LOOP, FREE SPACE, VERT CUT, PHI=0

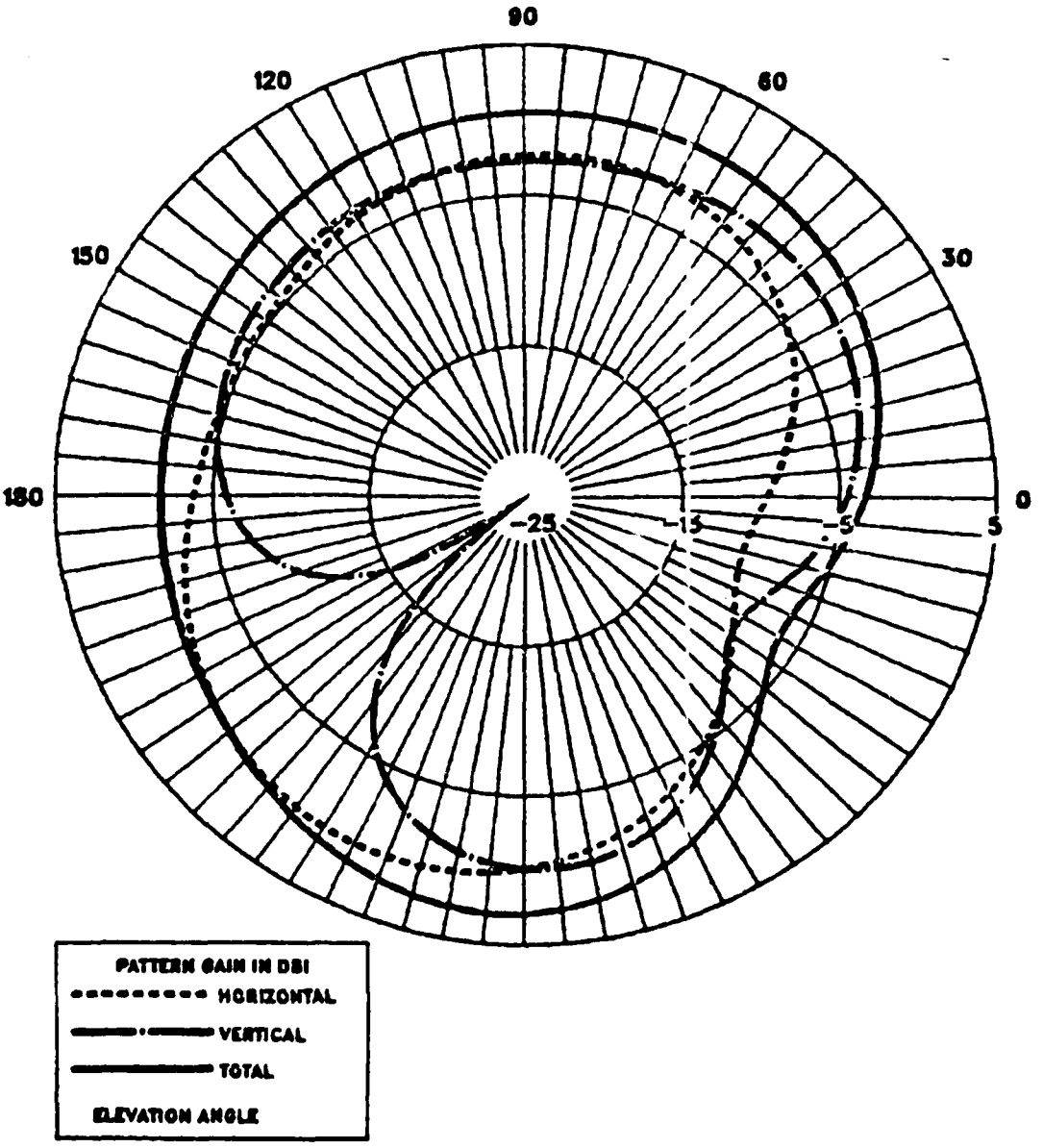

H65 IGUANA DATA RUN AT 18.1MHZ ON 8/15/87

LONG SHUNTED LOOP, FREE SPACE, VERT CUT, PHI=45

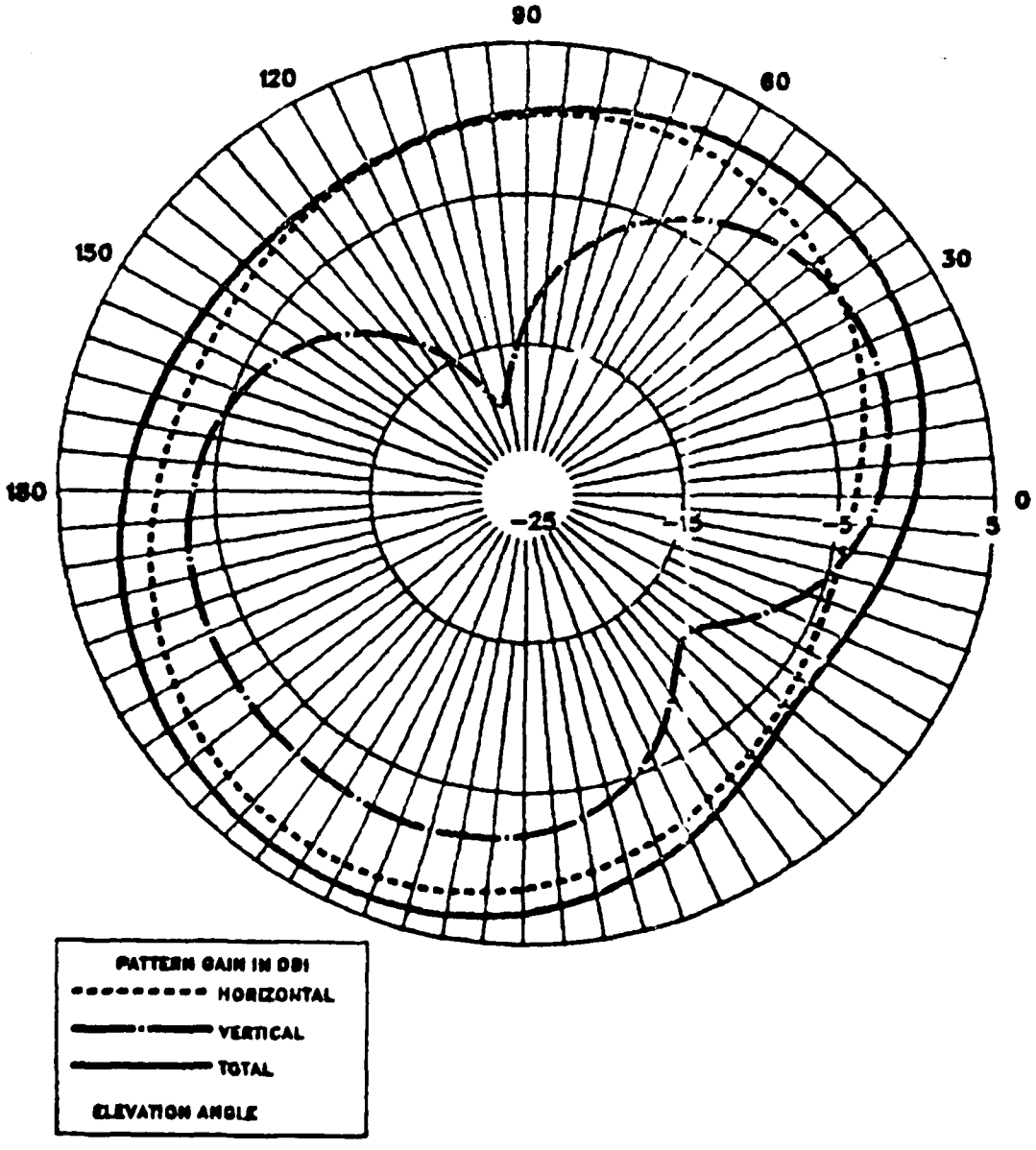

H60 IGUANA DATA RUN AT 3.123MHZ ON 8/19/87

LONG-WIRE ANT, FREE SPACE, HORIZ CUT, THETA=90

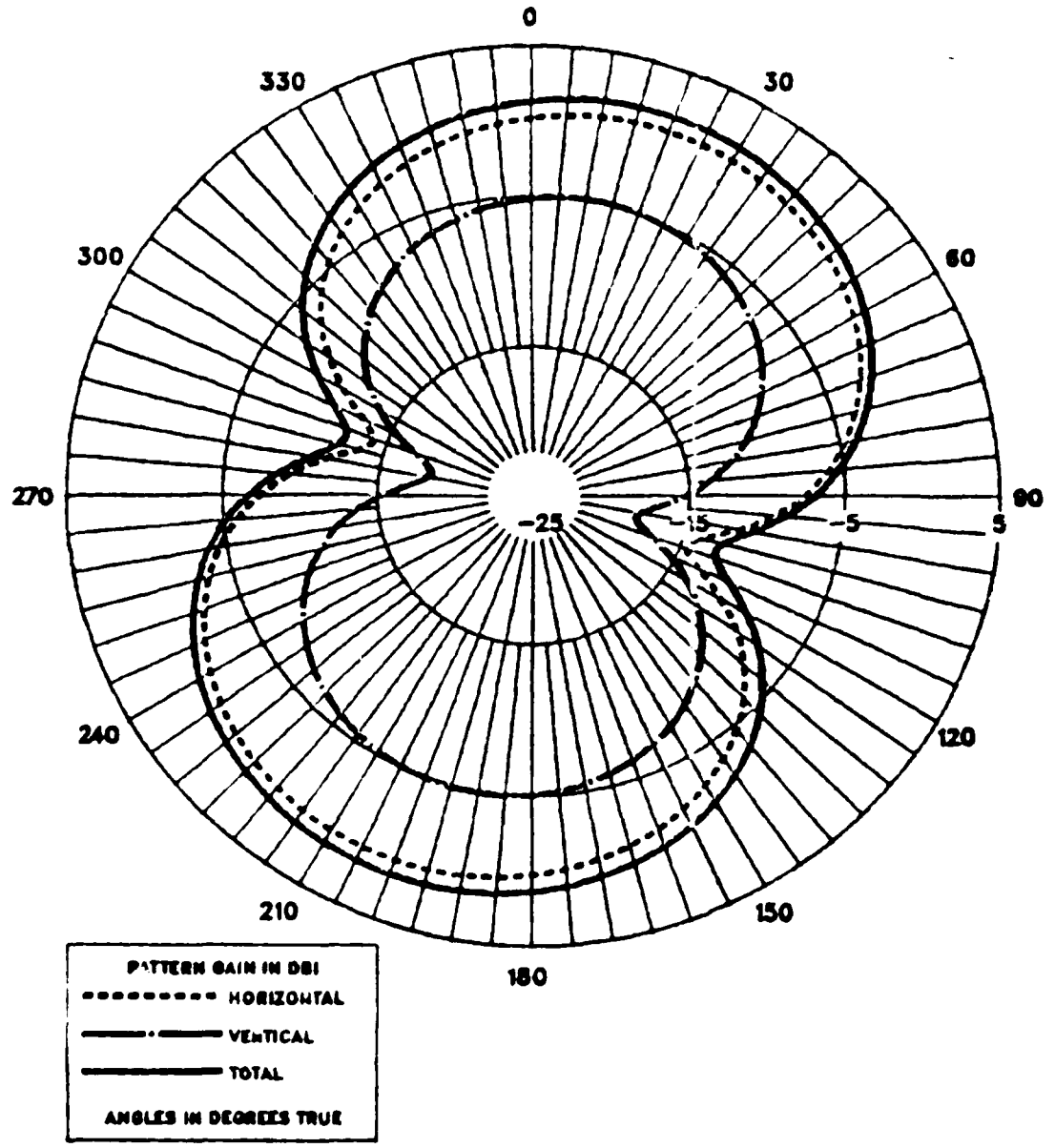

H60 IGUANA DATA RUN AT 3.123MHZ ON 8/19/87

LONG-WIRE ANT, FREE SPACE, HORIZ CUT, THETA=26

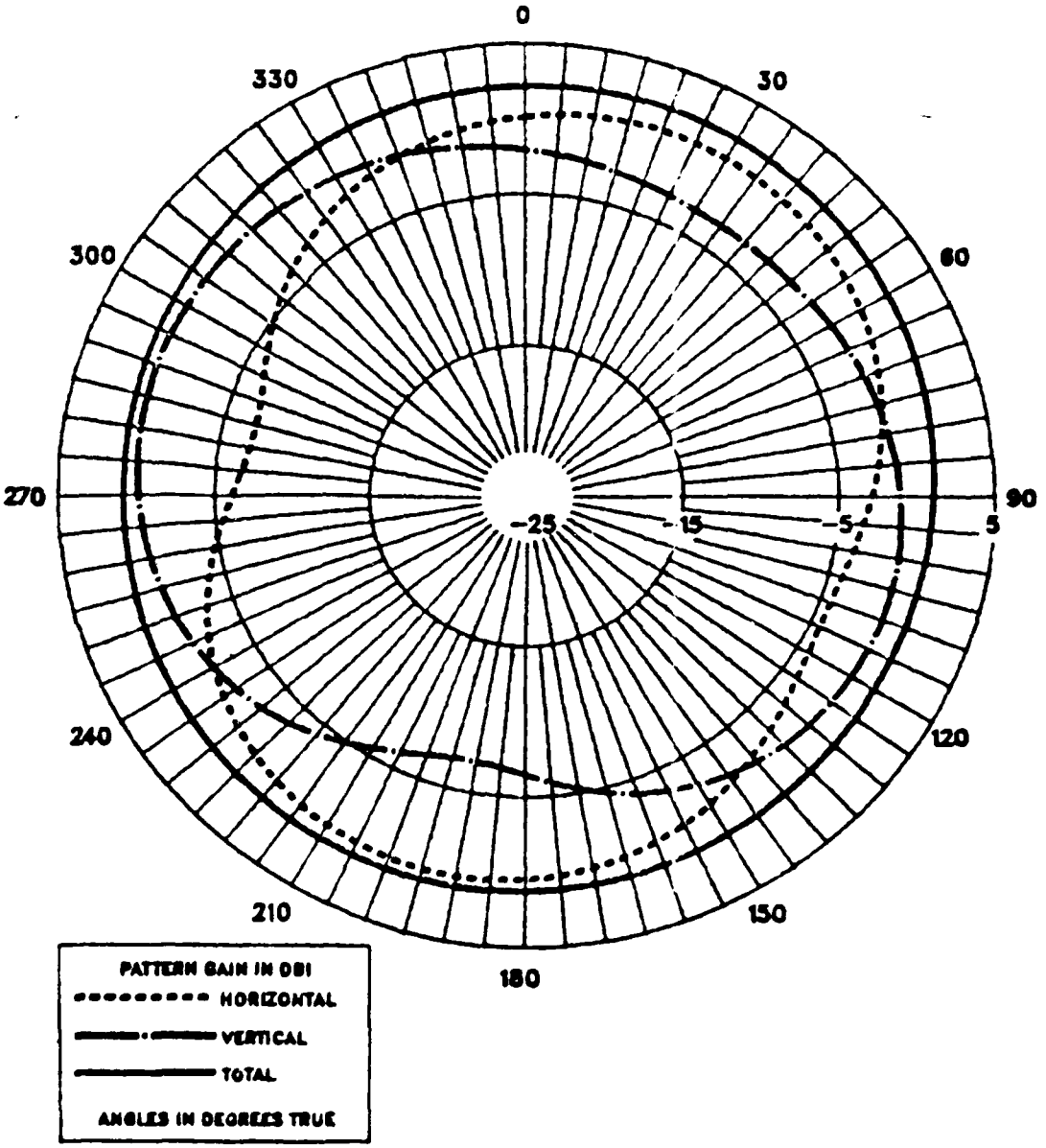

H60 IGUANA DATA RUN AT 3.123MHZ ON 8/19/87

LONG-WIRE ANT, FREE SPACE, VERT CUT, PHI=0

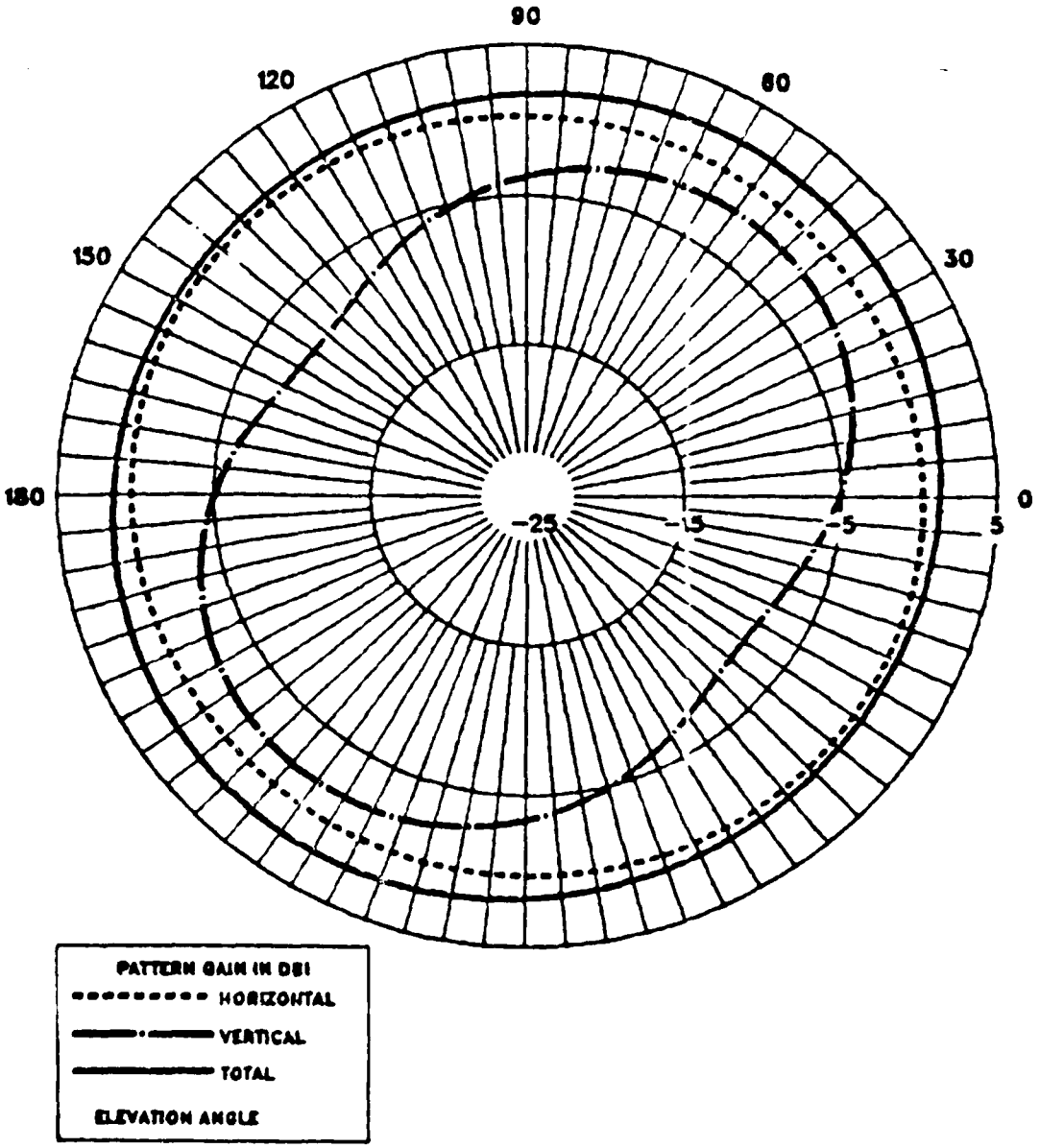

H60 IGUANA DATA RUN AT 3.123MHZ ON 8/19/87

LONG-WIRE ANT, FREE SPACE, VERT CUT, PHI=45

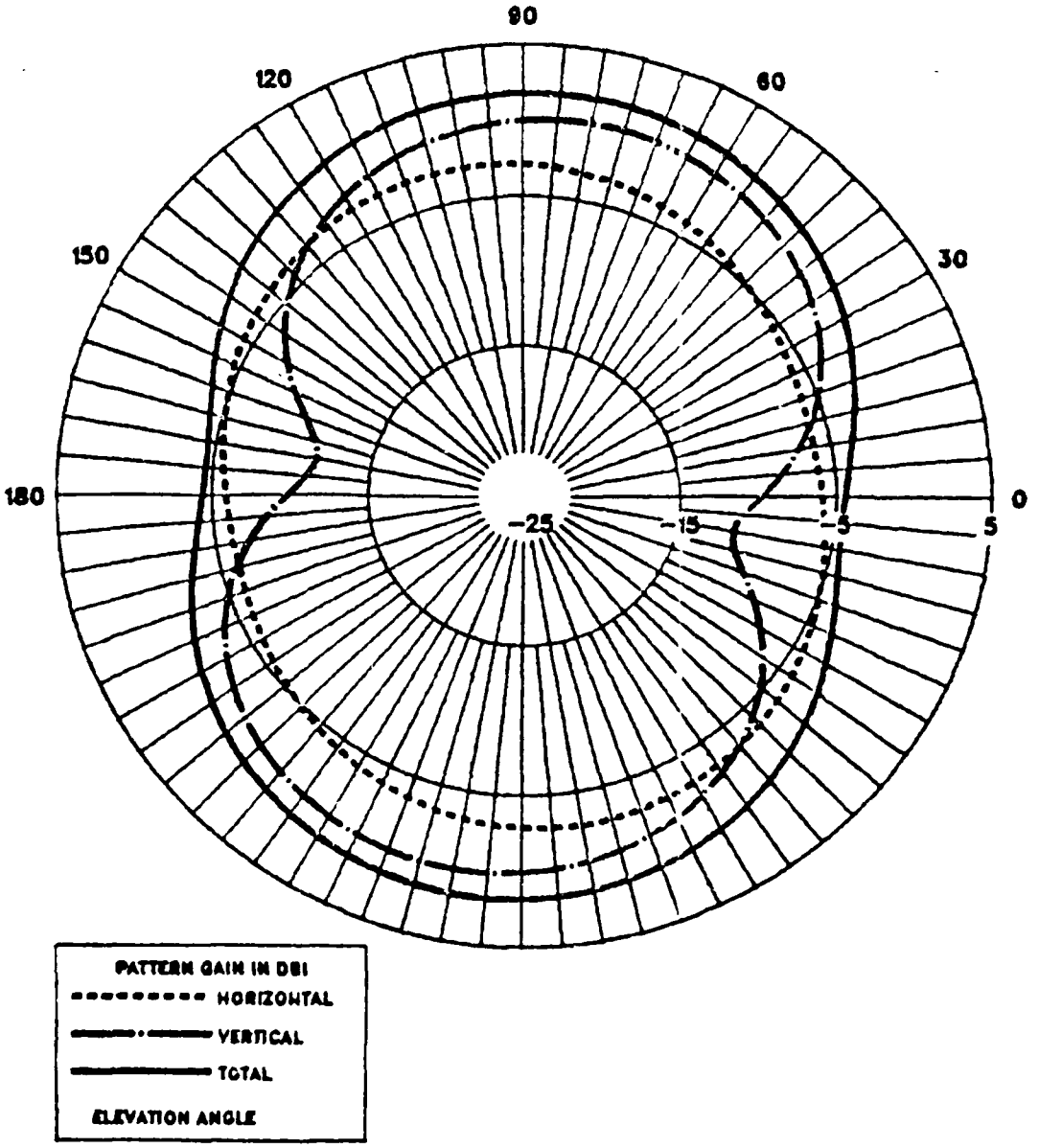

H60 IGUANA DATA RUN AT 3.123MHZ ON 8/19/87

NAVY 437R-2 ANT, FREE SPACE, HORIZ CUT, THETA=90

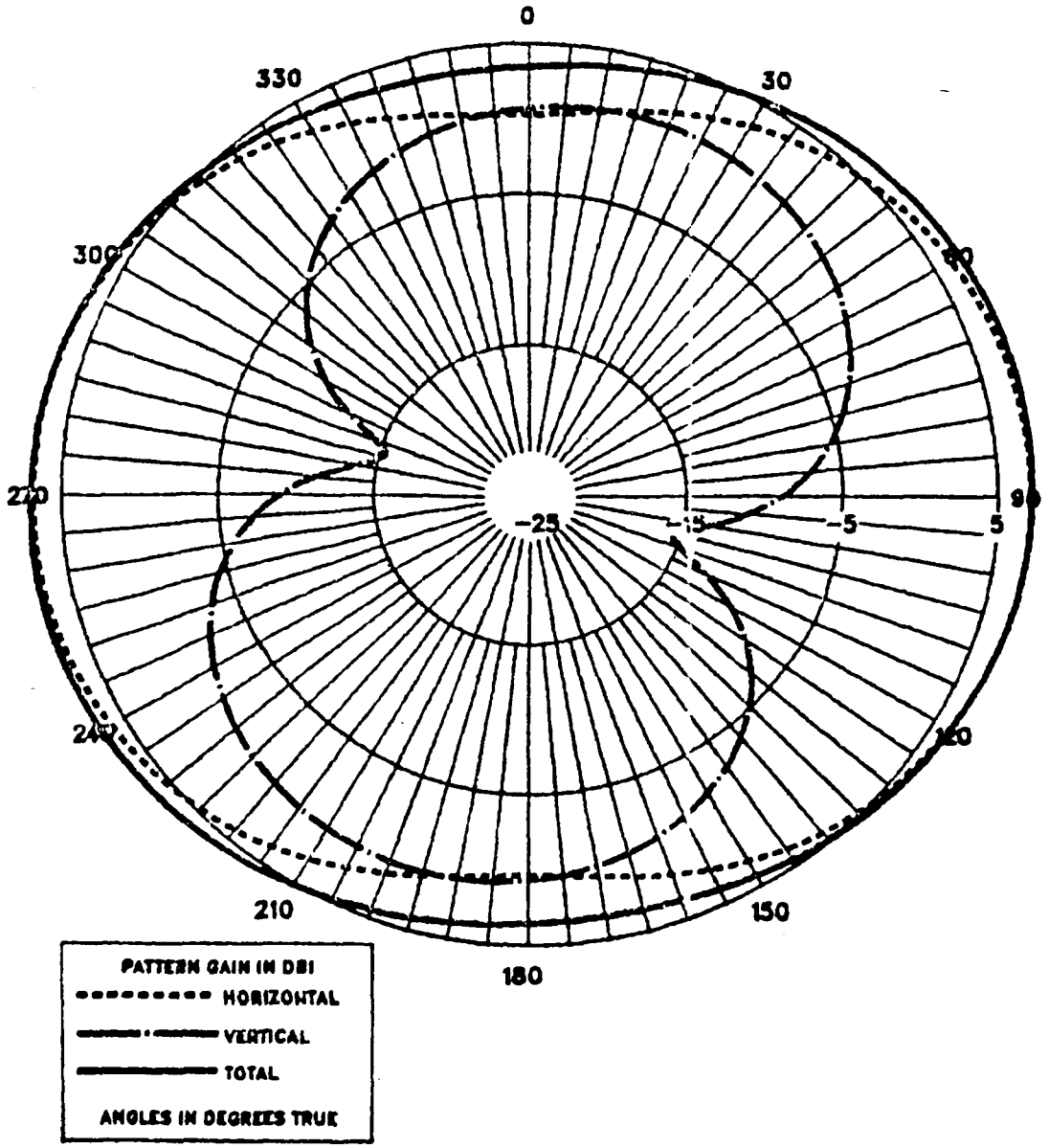

H60 IGUANA DATA RUN AT 3.123MHZ ON 8/19/87

NAVY 437R-2 ANT, FREE SPACE, HORIZ CUT, THETA=26

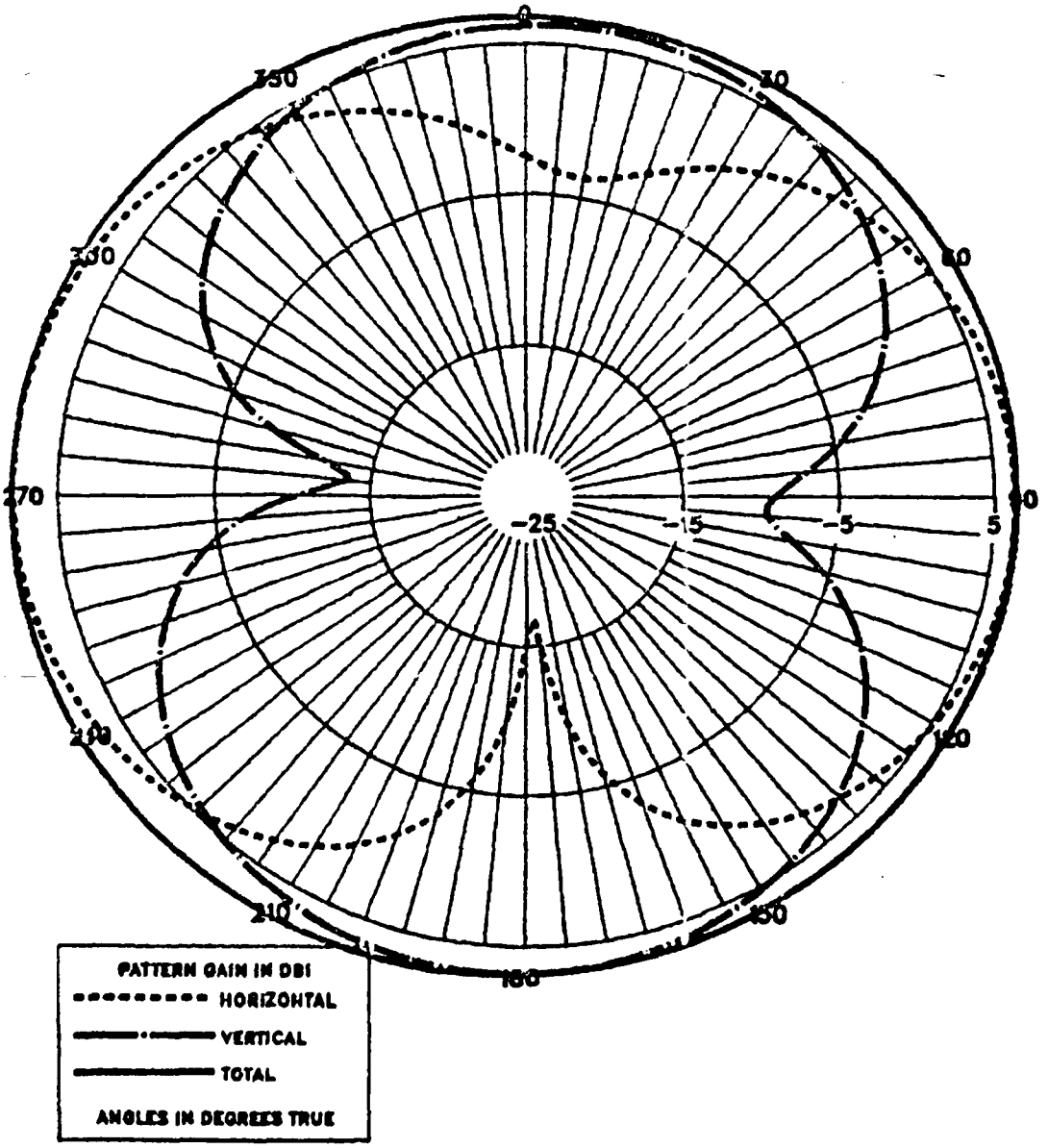

H60 IGUANA DATA RUN AT 3.123MHZ ON 8/19/87

NAVY 437R-2 ANT, FREE SPACE, VERT CUT, PHI=0

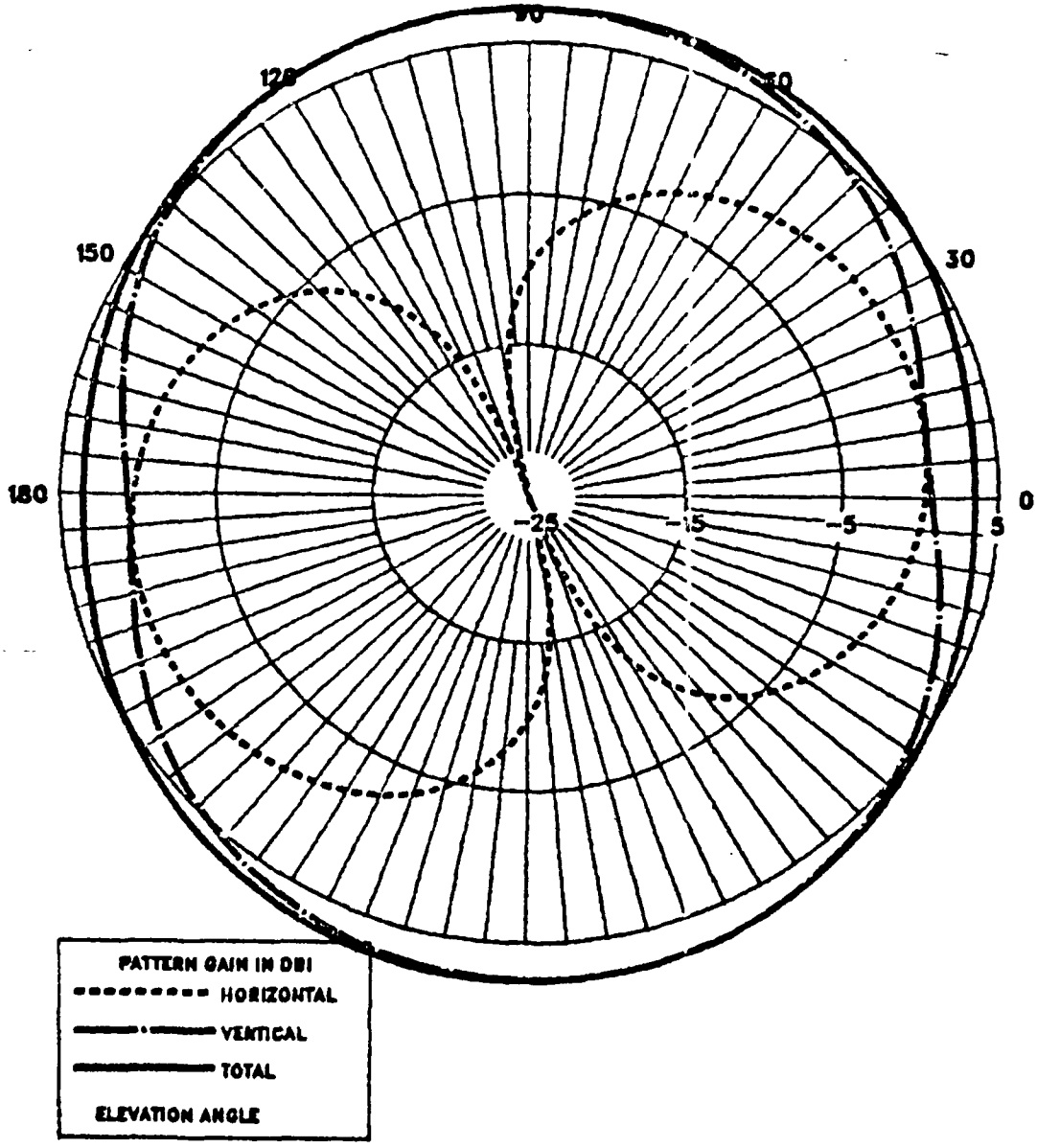

H60 IGUANA DATA RUN AT 3.123MHZ ON 8/19/87

NAVY 437R-2 ANT, FREE SPACE, VERT CUT, PHI=45

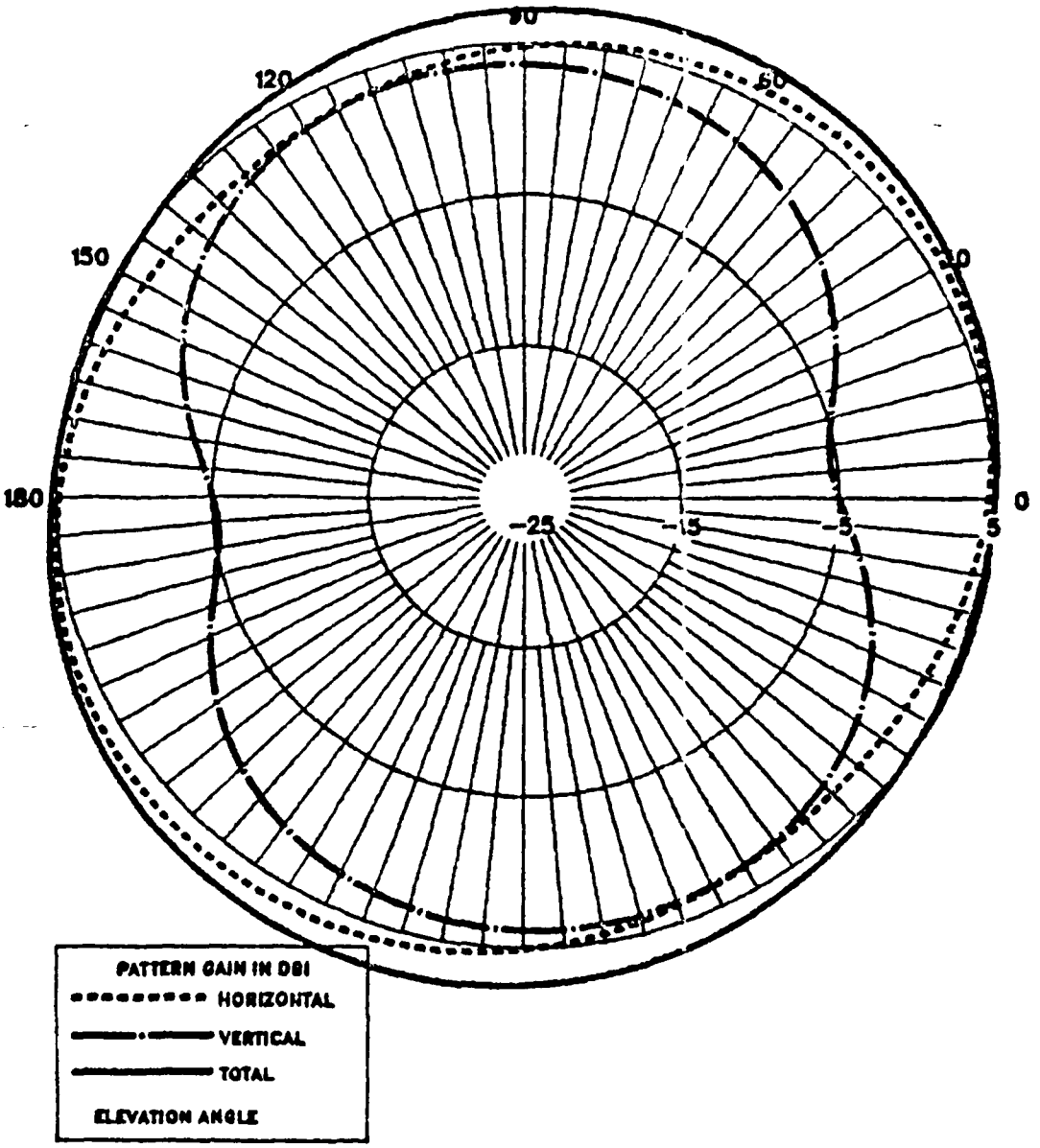

H60 IGUANA DATA RUN AT 3.123MHZ ON 8/19/87

CG 437R-2 ANT, FREE SPACE, HORIZ CUT, THETA=90

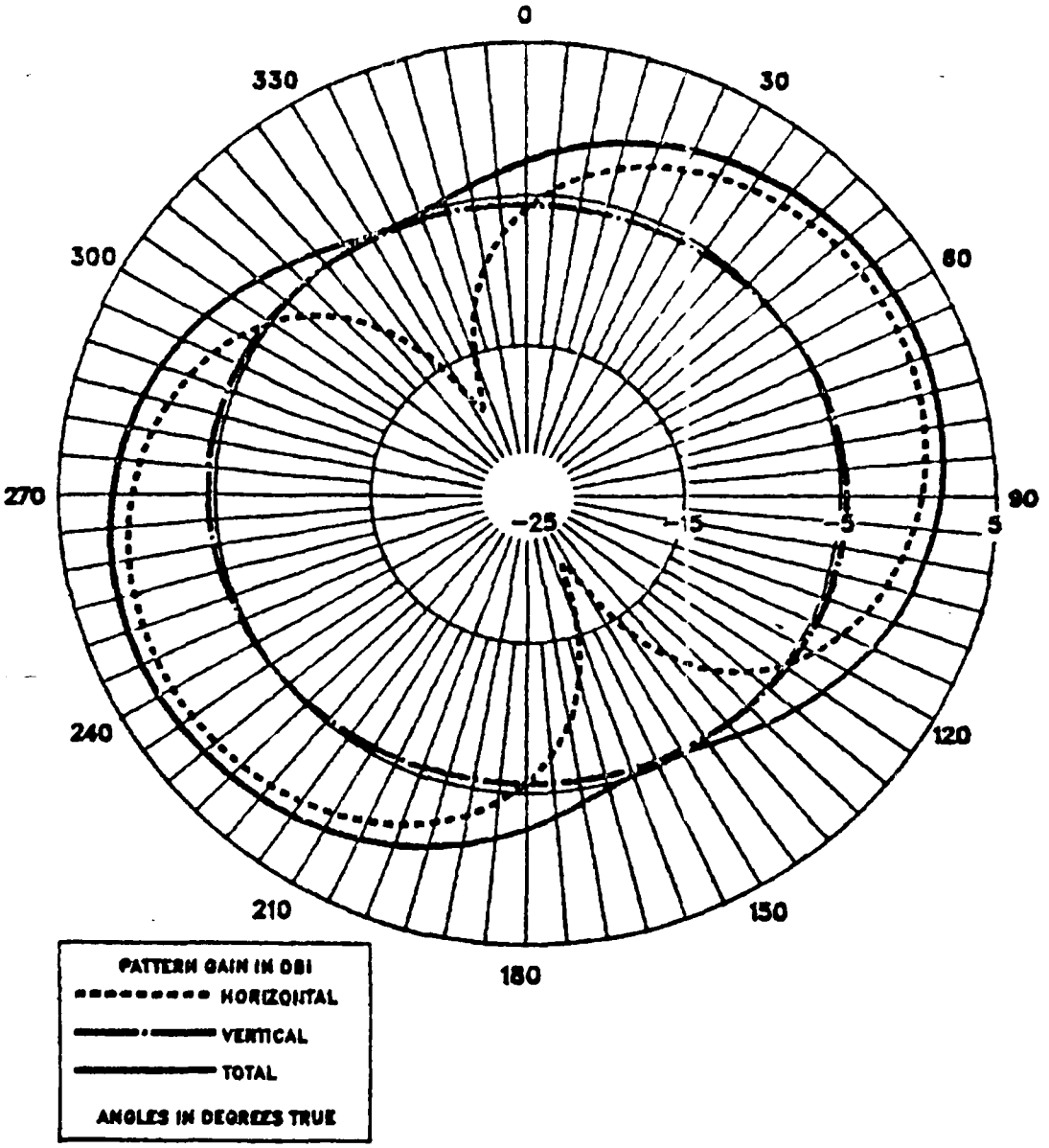

H60 IGUANA DATA RUN AT 3.123MHZ ON 8/19/87

CG 437R-2 ANT, FREE SPACE, HORIZ CUT, THETA=26

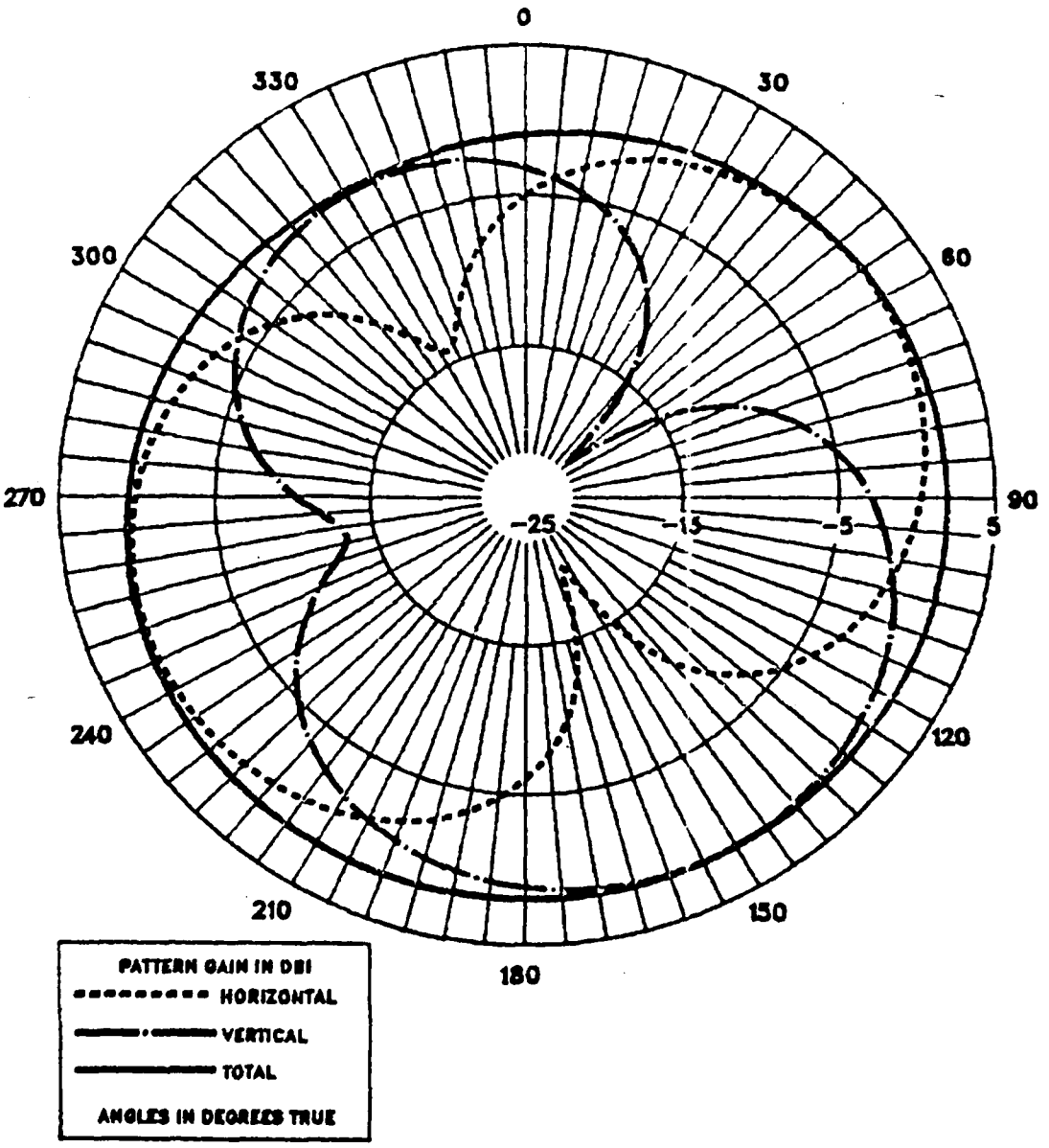

H60 IGUANA DATA RUN AT 3.123MHZ ON 8/19/87

CG 437R-2 ANT, FREE SPACE, VERT CUT, PHI=0

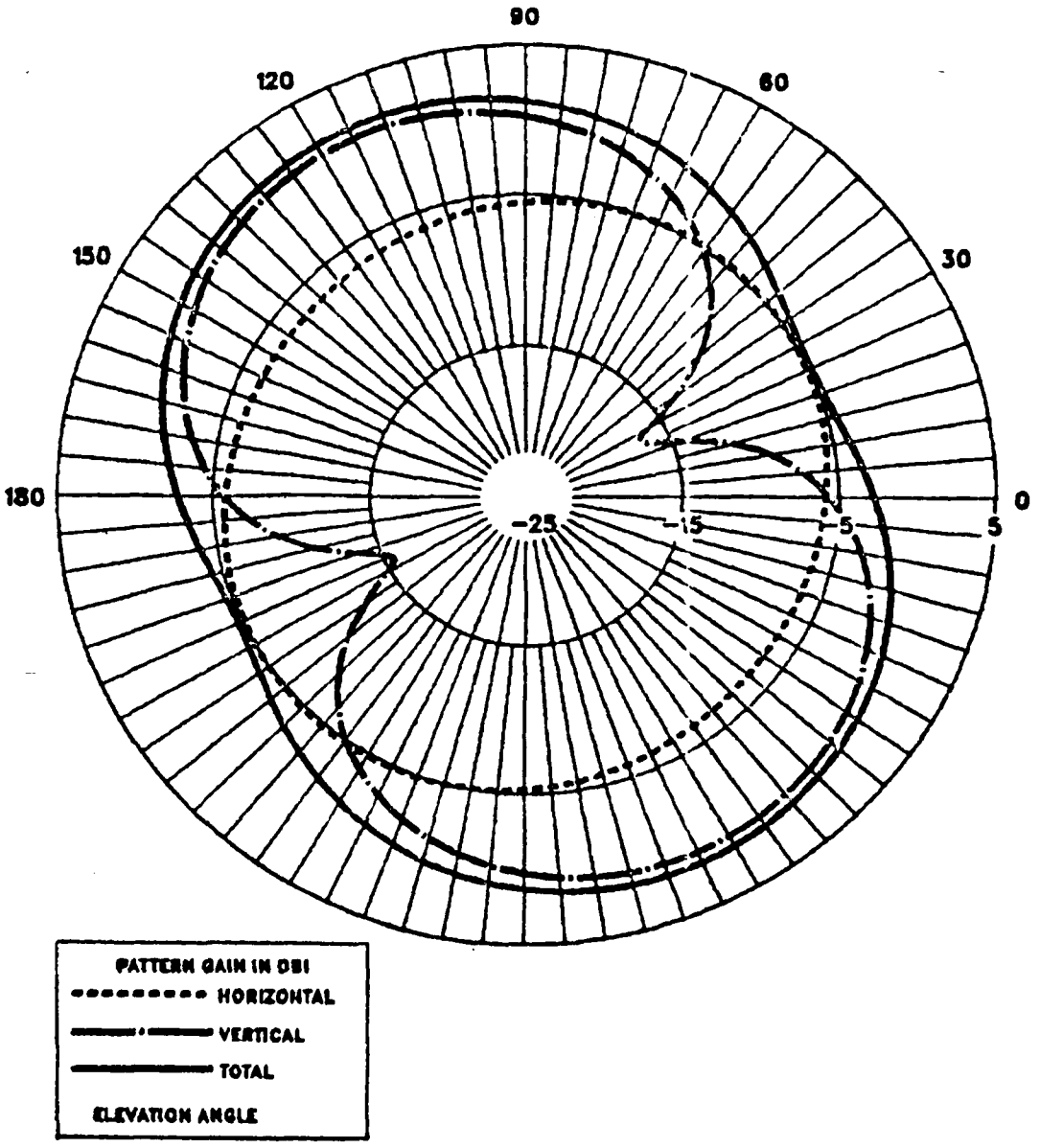

H60 IGUANA DATA RUN AT 3.123MHZ ON 8/19/87

CG 437R-2 ANT, FREE SPACE, VERT CUT, PHI=45

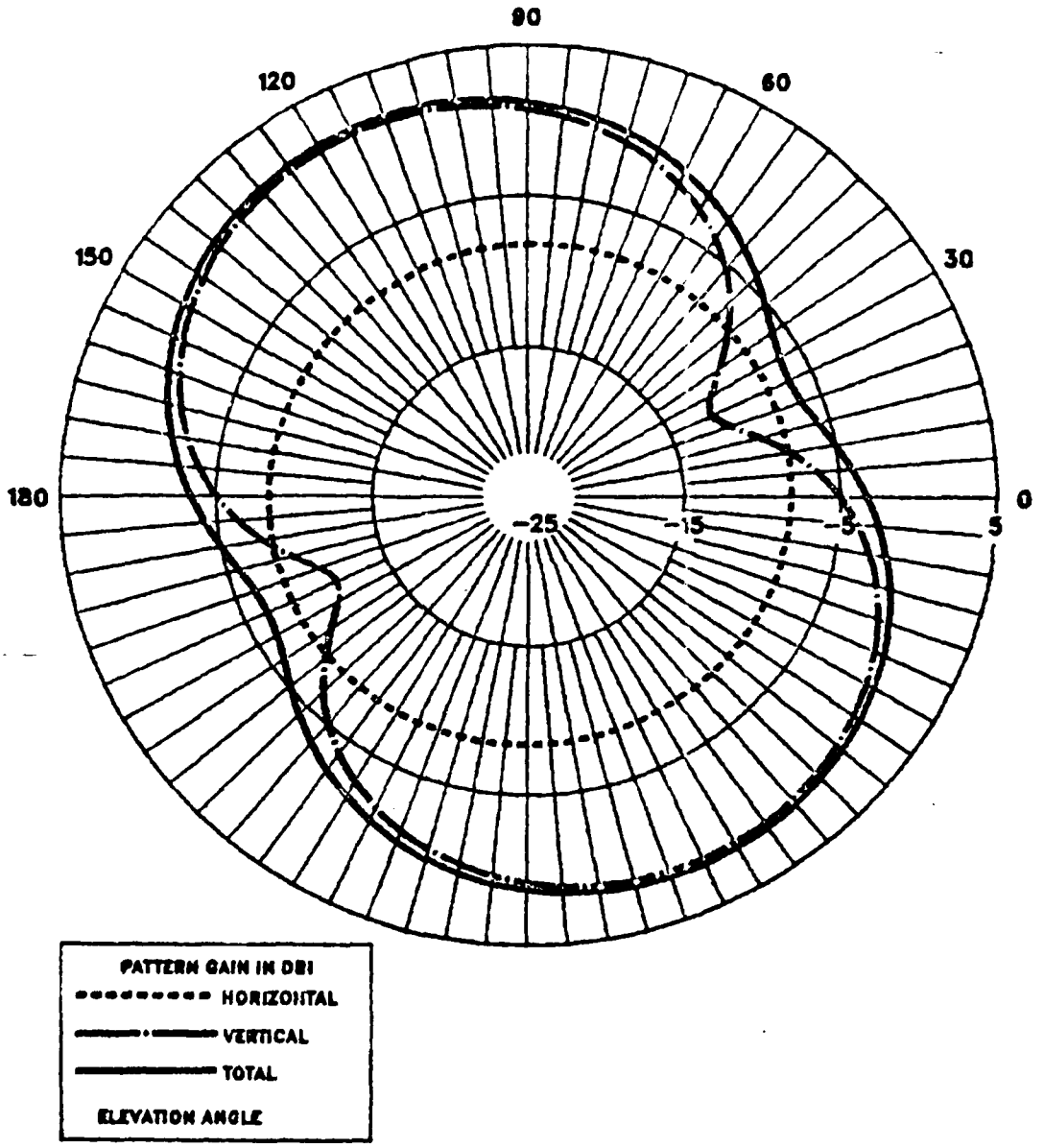

H60 IGUANA DATA RUN AT 3.123MHZ ON 8/19/87

ARMY–TYPE TUBE ANT, FREE SPACE, HORIZ CTU, THETA=90

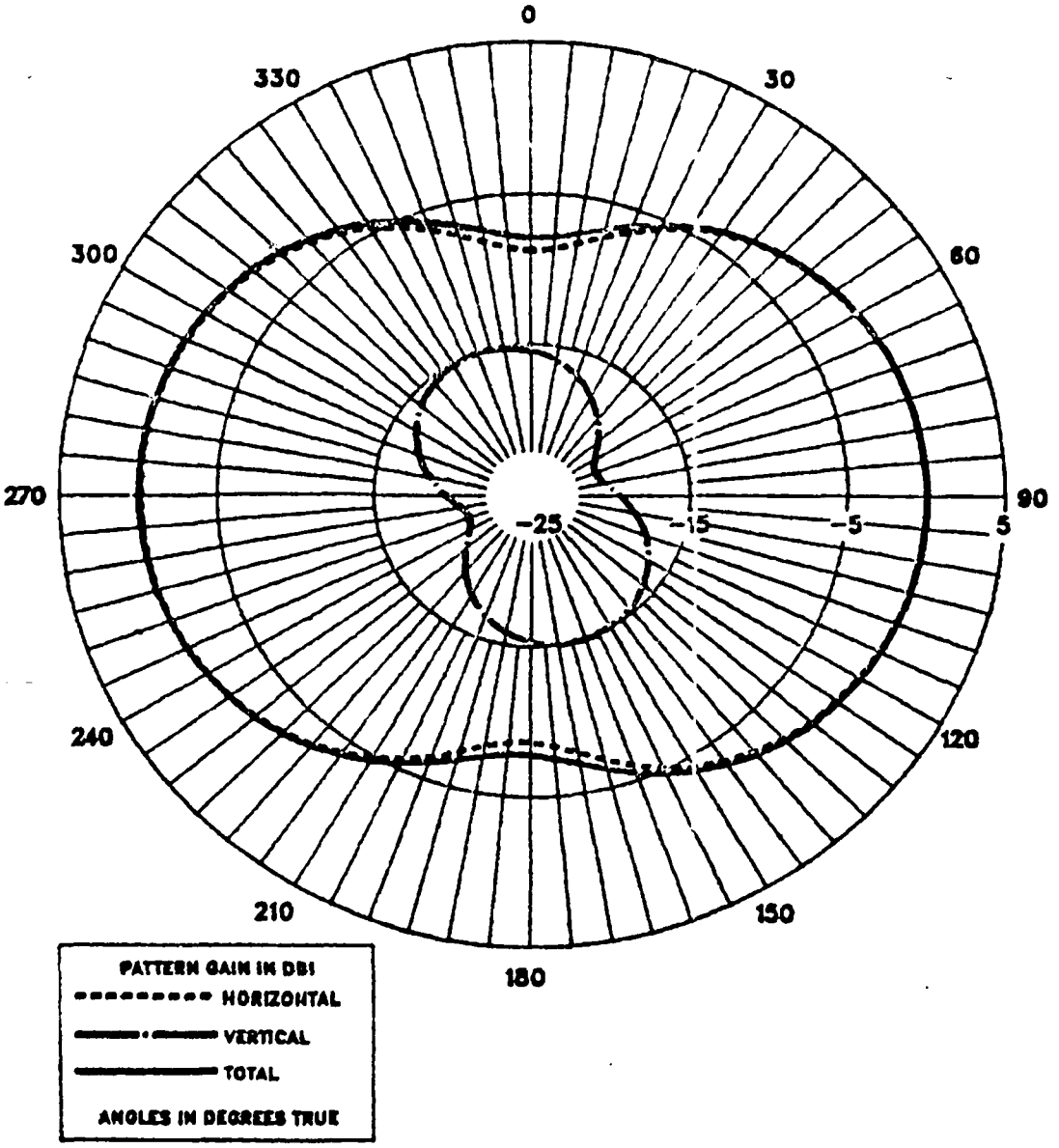

H60 IGUANA DATA RUN AT 3.123MHZ ON 8/19/87

ARMY–TYPE TUBE ANT, FREE SPACE, HORIZ CUT, THETA=26

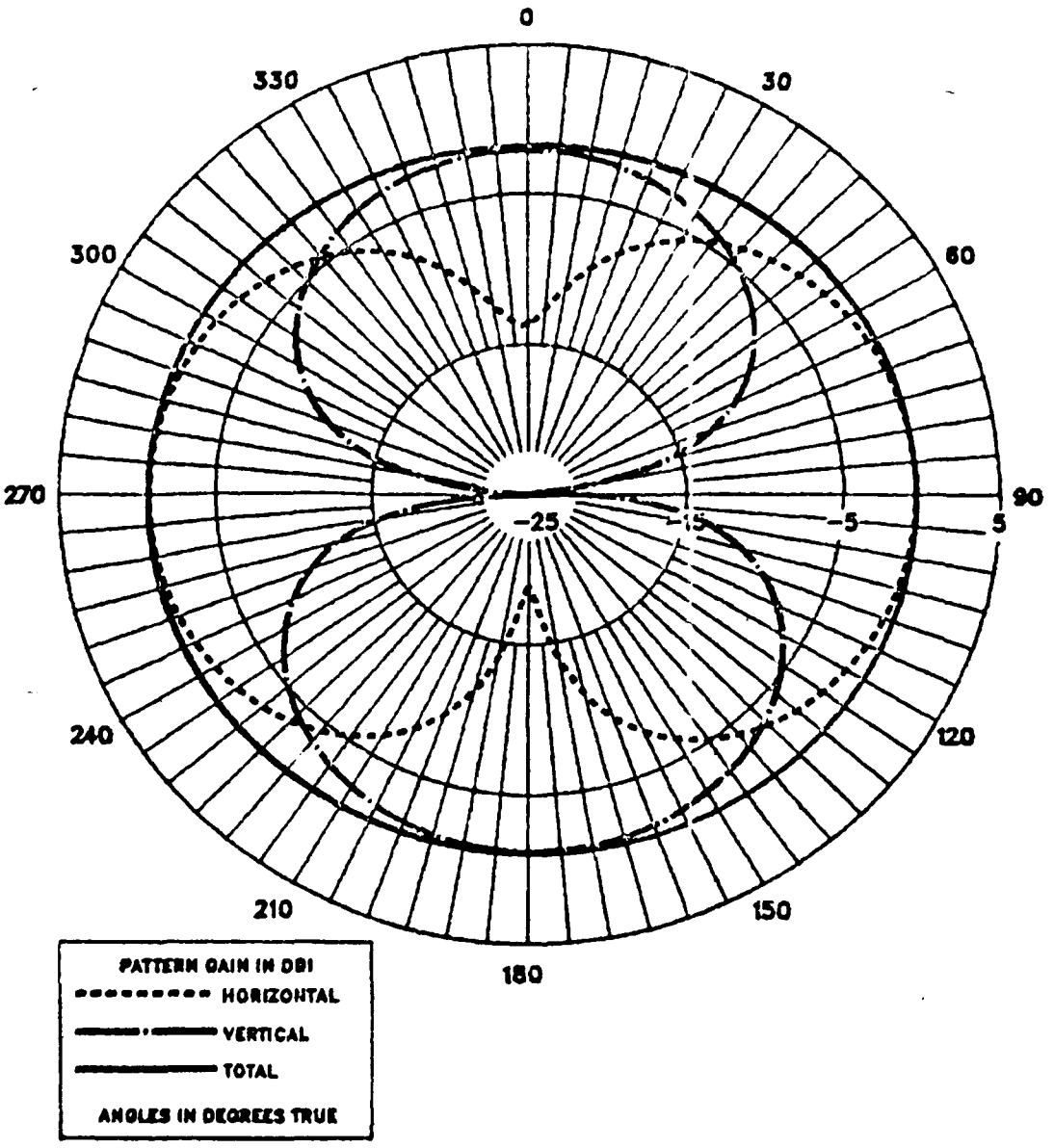

H60 IGUANA DATA RUN AT 3.123MHZ ON 8/19/87

ARMY-TYPE TUBE ANT, FREE SPACE, VERT CUT, PHI=0

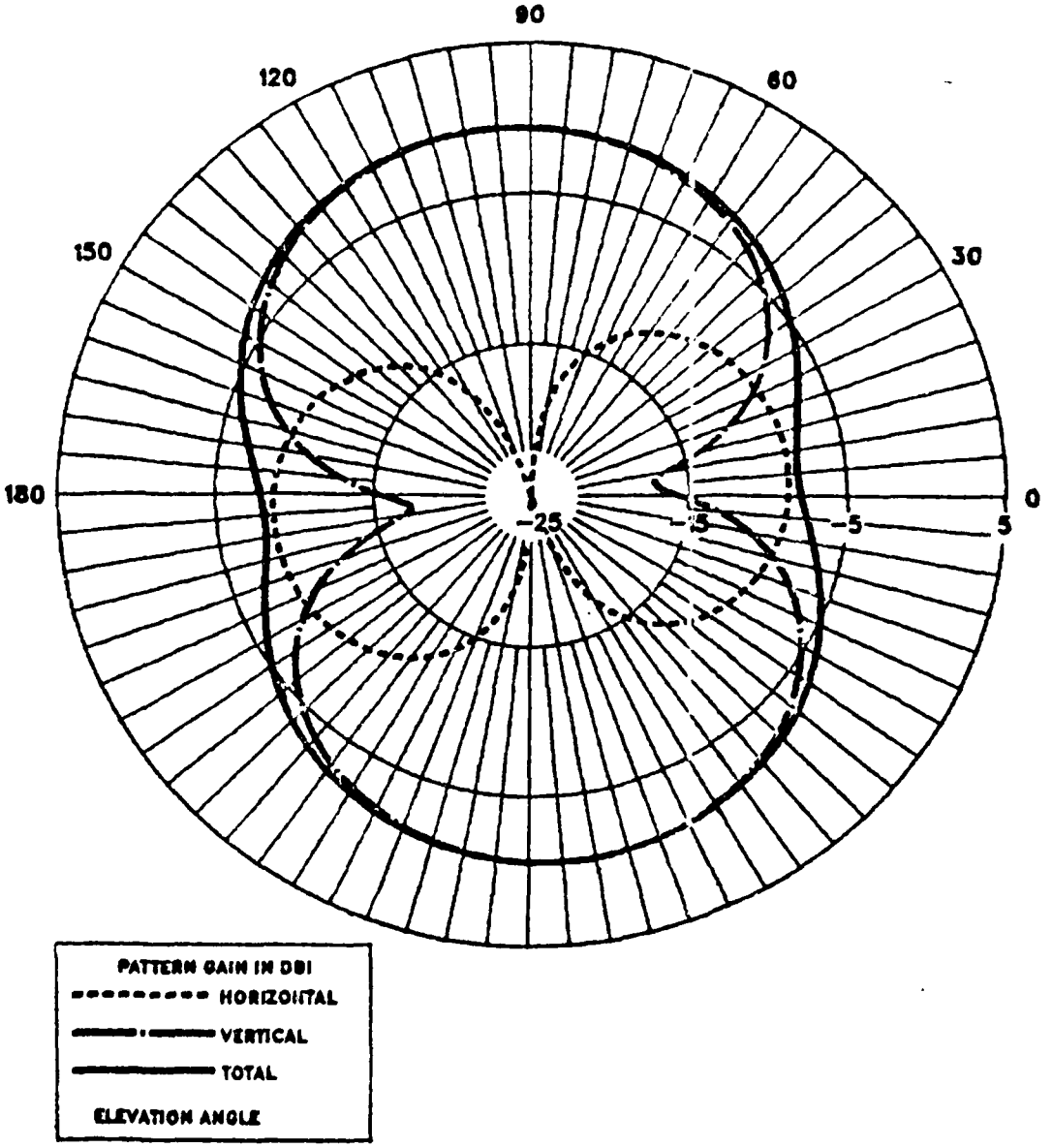

H60 IGUANA DATA RUN AT 3.123MHZ ON 8/19/87

ARMY-TYPE TUBE ANT, FREE SPACE, VERT CUT, PHI=45

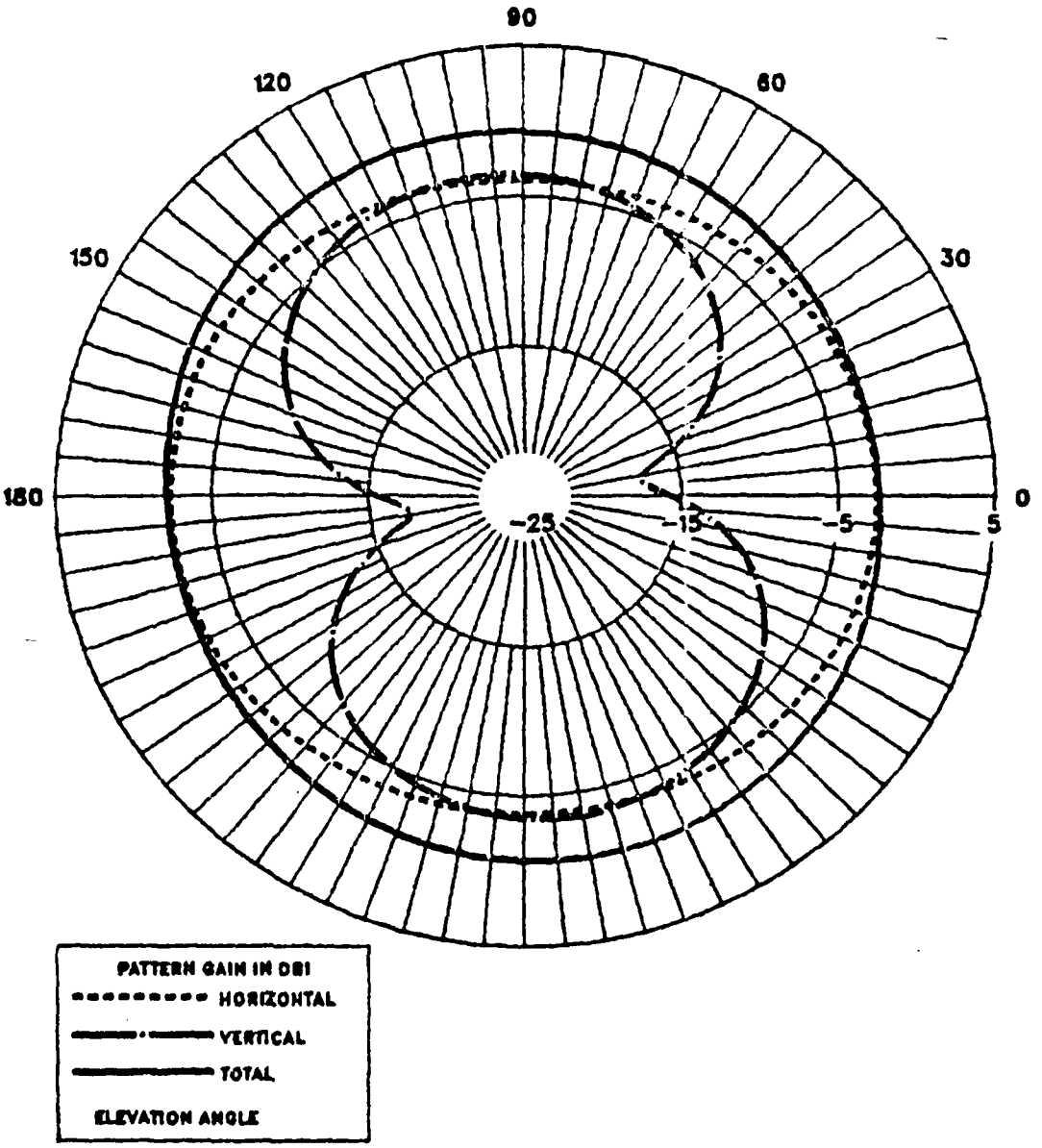

H60 IGUANA DATA RUN AT 4.040MHZ ON 8/18/87

LW SPACED 18" FROM A/C, FREE SPACE, HORIZ CUT, THETA=90

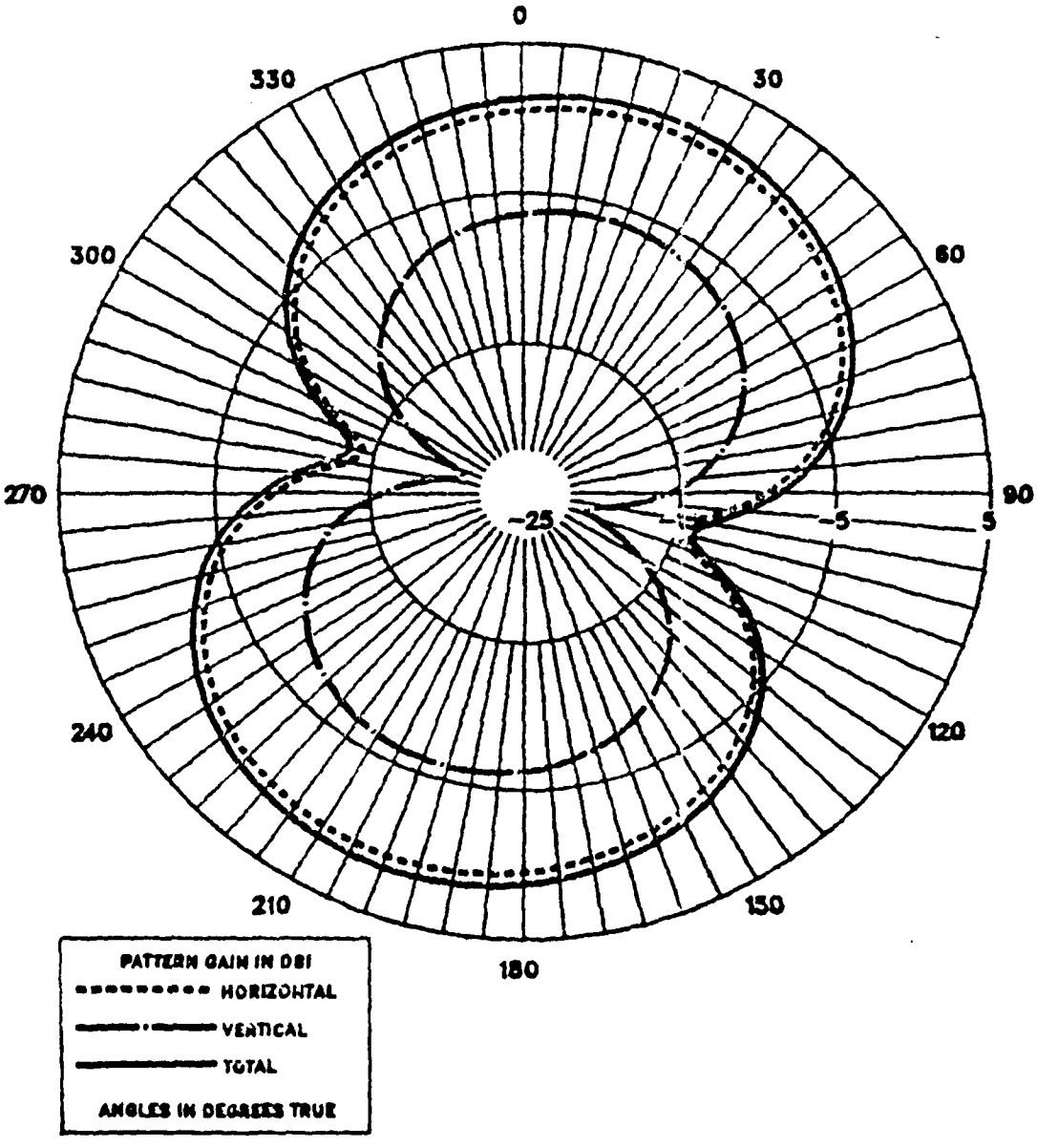

H60 IGUANA DATA RUN AT 4.040MHZ ON 8/18/87

LW SPACED 18" FROM A/C, FREE SPACE, HORIZ CUT, THETA=26

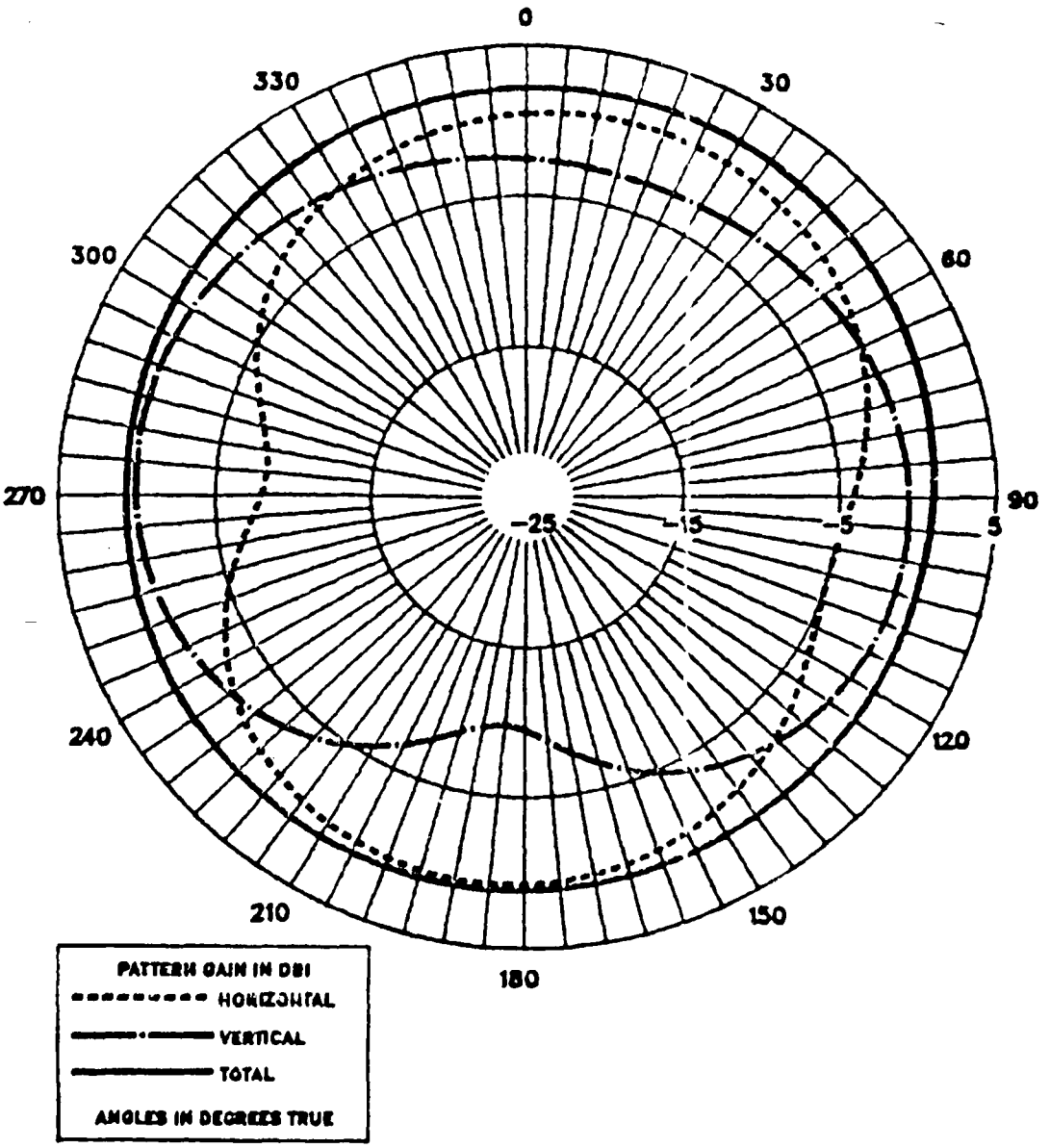

H60 IGUANA DATA RUN AT 4.040MHZ ON 8/18/87

LW SPACED 18" FROM A/C, FREE SPACE, VERT CUT, PHI=0

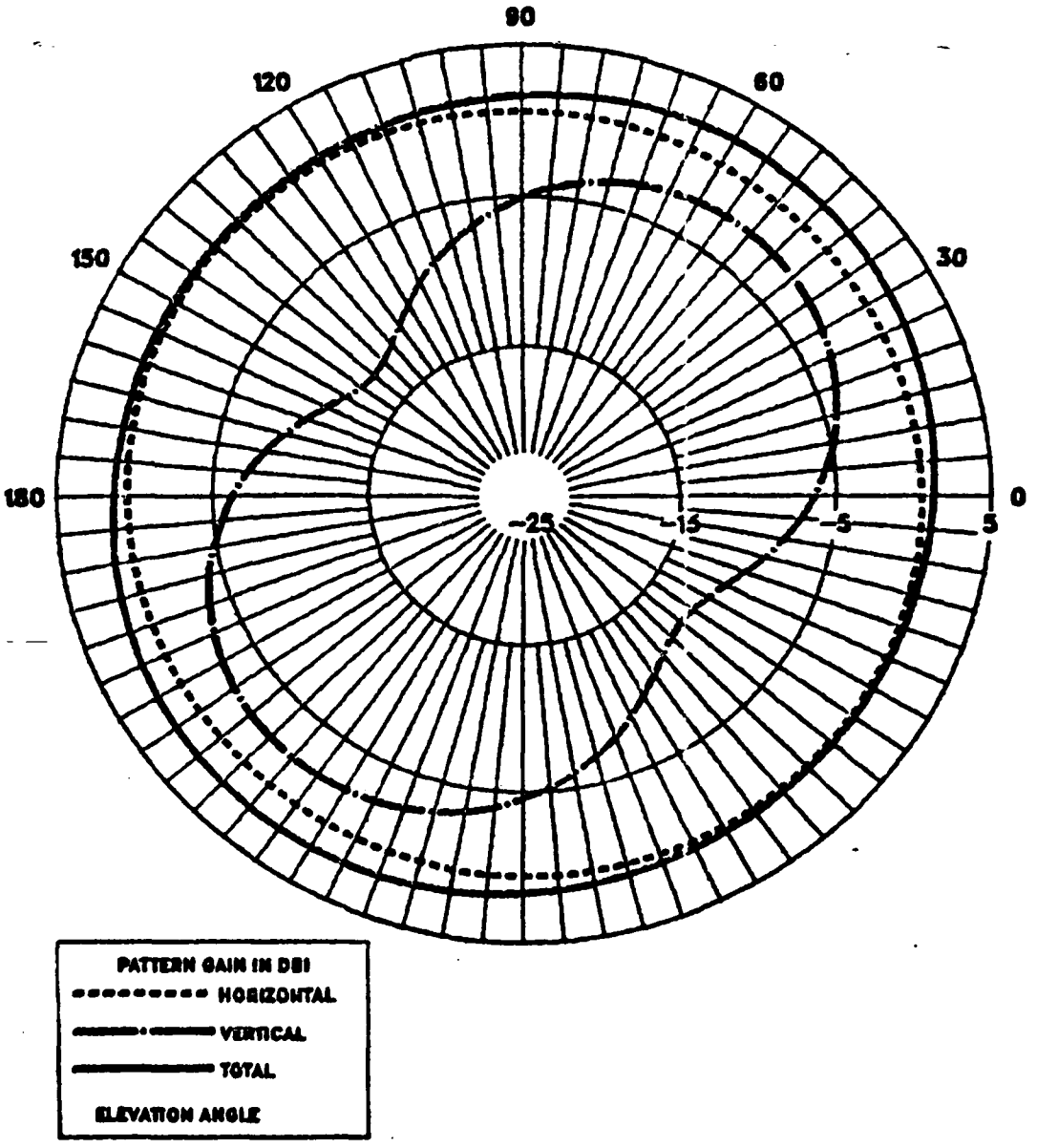

H60 IGUANA DATA RUN AT 4.040MHZ ON 8/18/87

LW SPACED 18" FROM A/C, FREE SPACE, VERT CUT, PHI=45

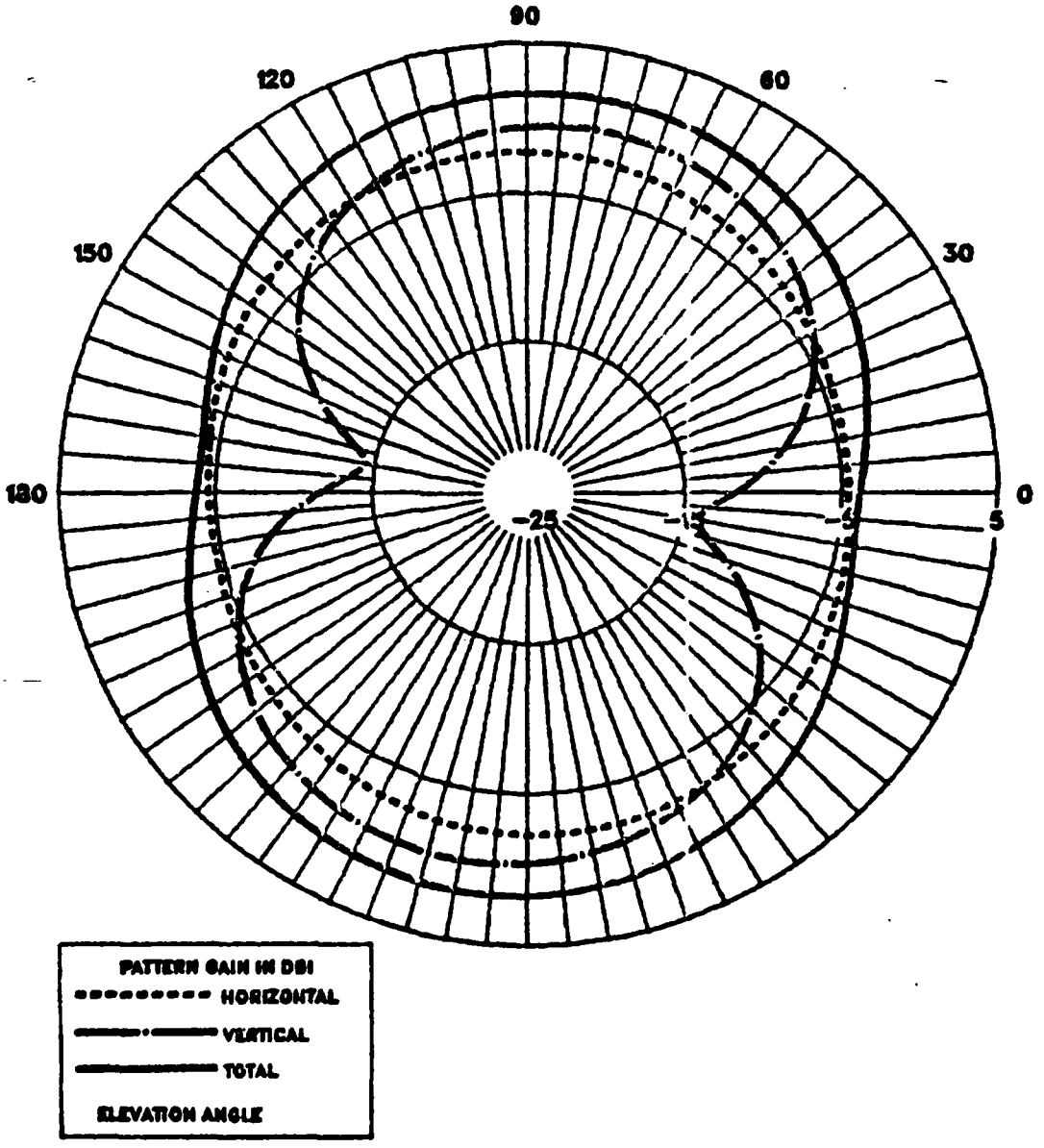

H60 IGUANA DATA RUN AT 4.040MHZ ON 8/18/87

NAVY 437R-2 ANT, FREE SPACE, HORIZ CUT, THETA=90

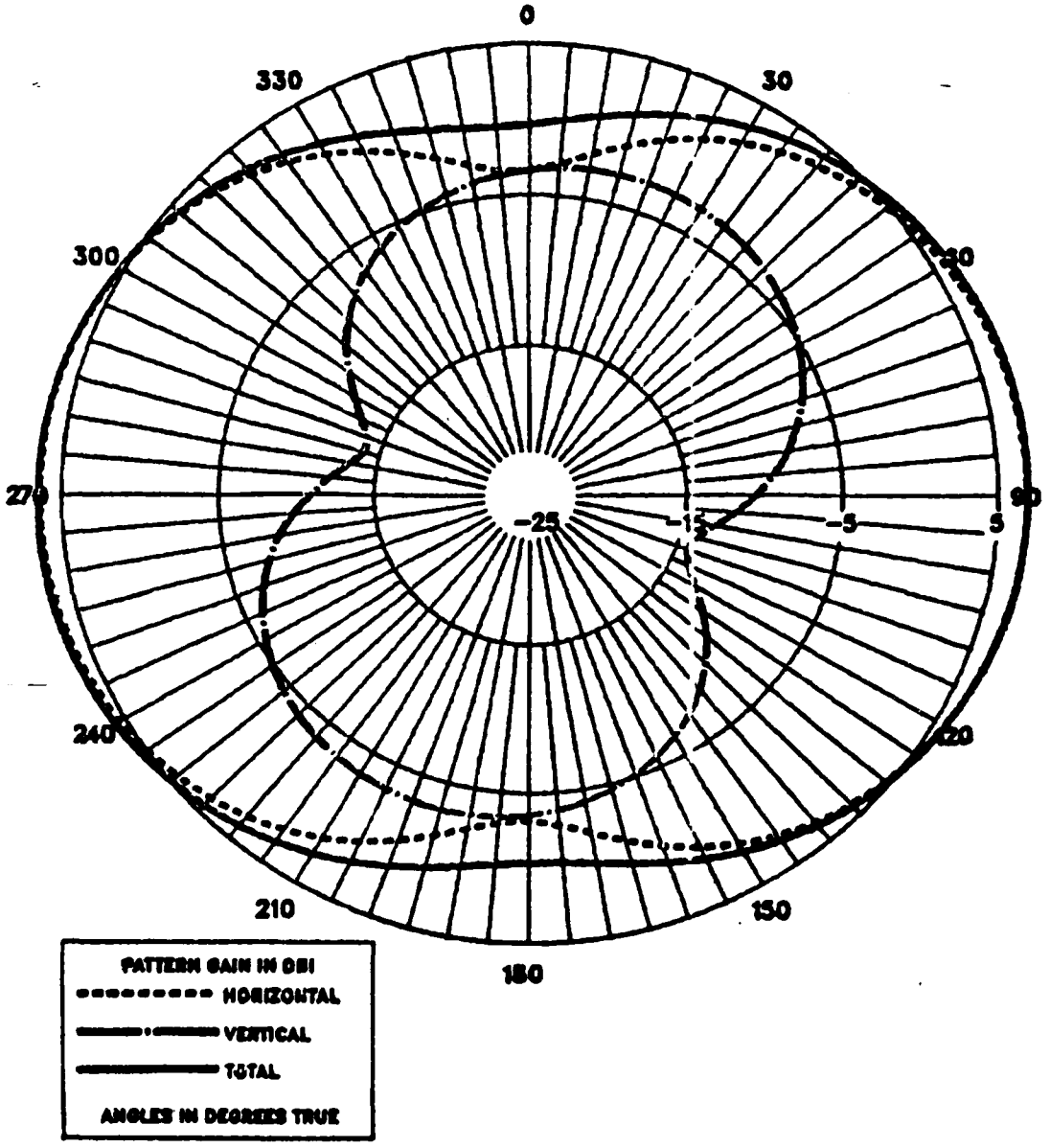

H60 IGUANA DATA RUN AT 4.040MHZ ON 8/18/87

NAVY 437R-2 ANT, FREE SPACE, HORIZ CUT, THETA=26

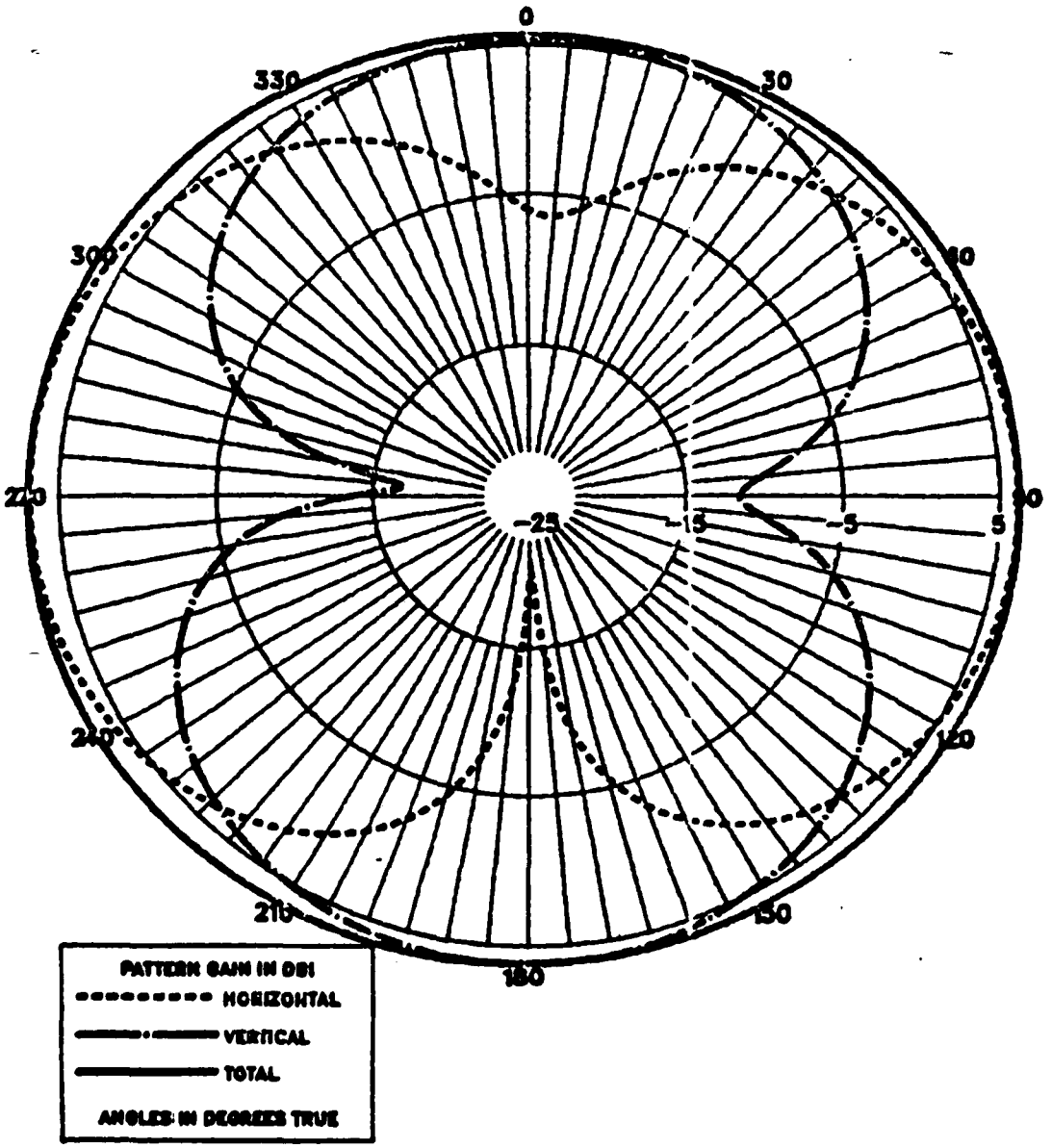

H60 IGUANA DATA RUN AT 4.040MHZ ON 8/18/87

NAVY 437R-2 ANT, FREE SPACE, VERT CUT, PHI=0

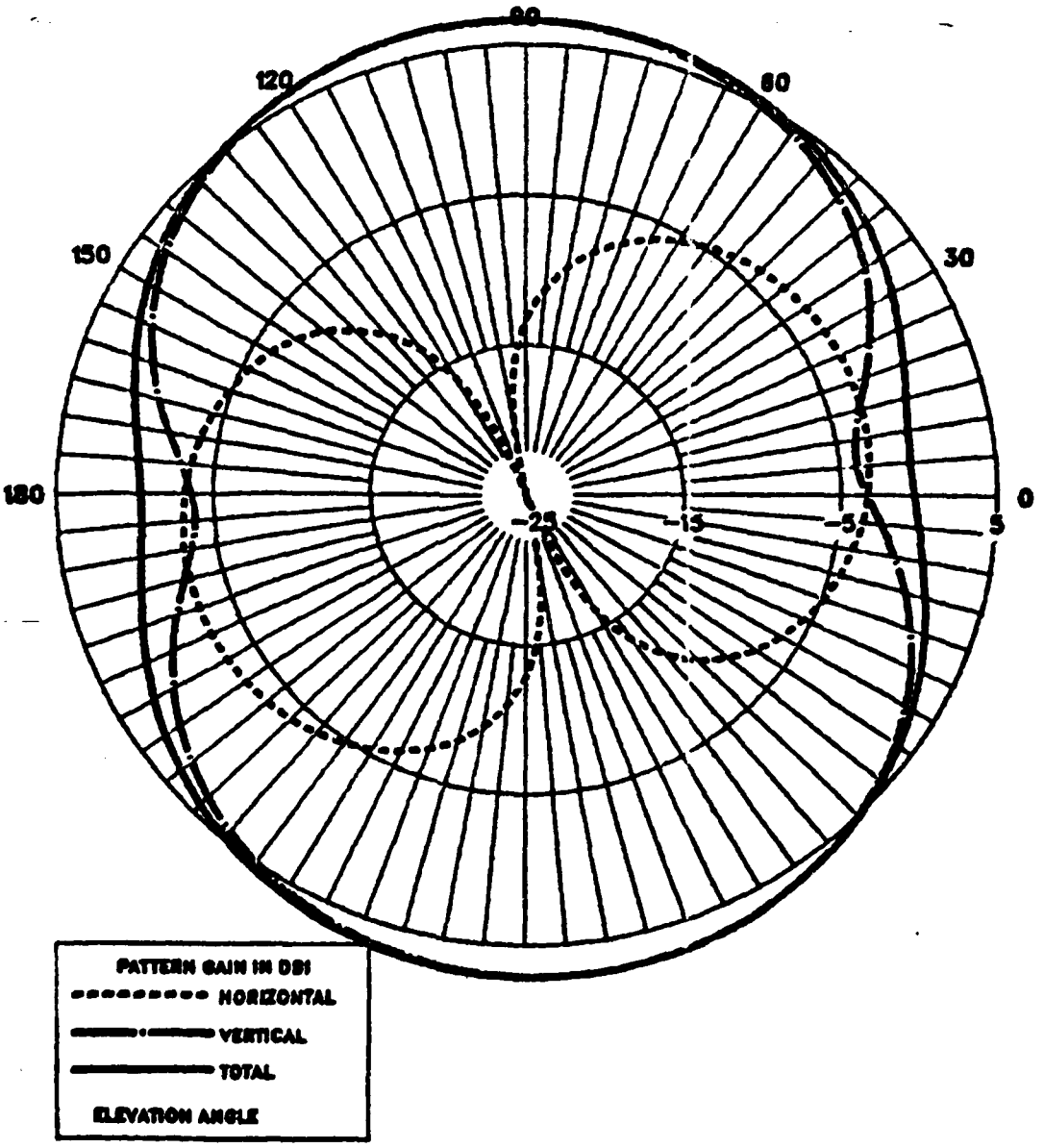

H60 IGUANA DATA RUN AT 4.040MHZ ON 8/18/87

NAVY 437R-2 ANT, FREE SPACE, VERT CUT, PHI=45

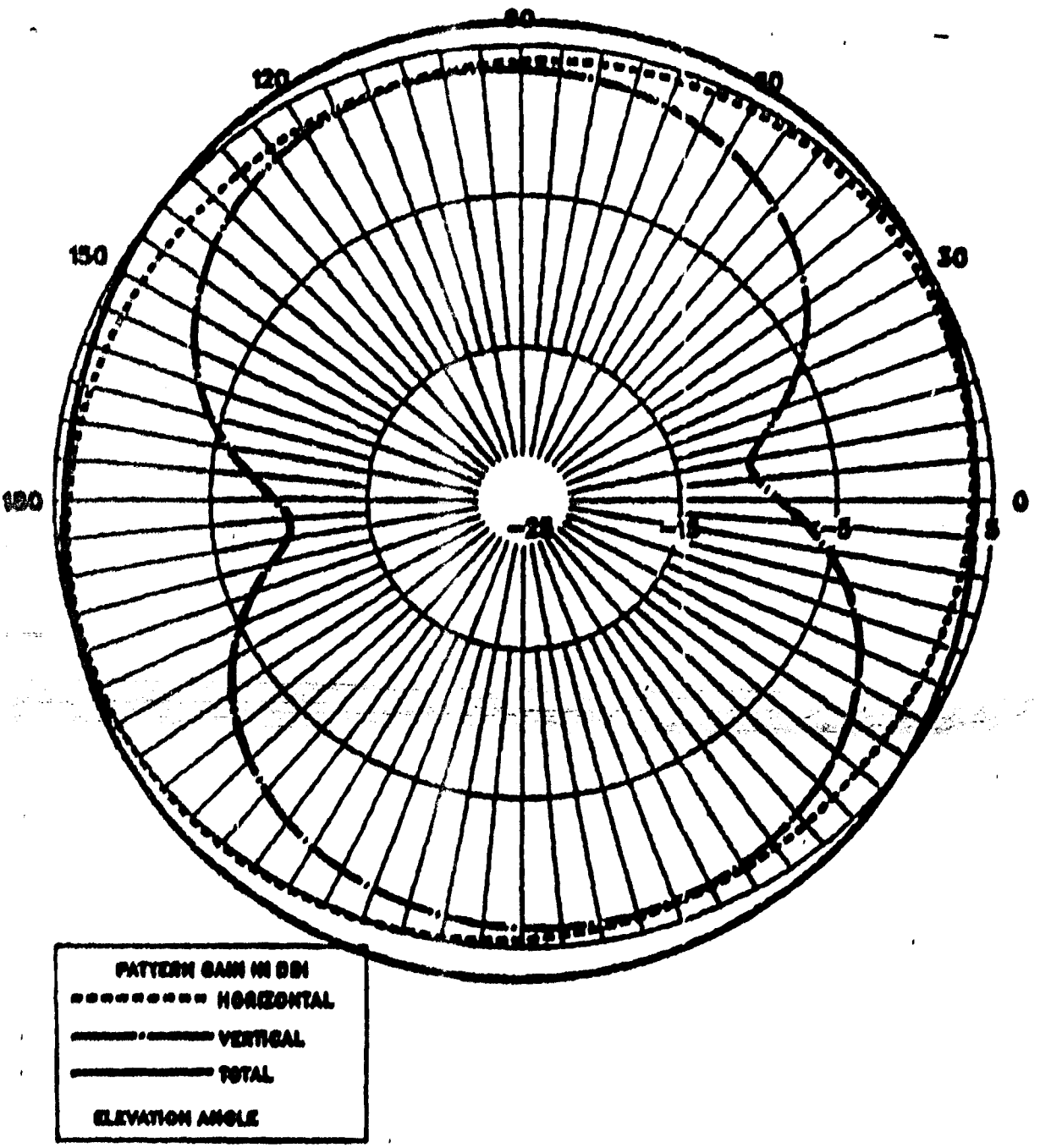

H60 IGUANA DATA RUN AT 4.040MHZ ON 8/18/87

CG 437R-2 ANT, FREE SPACE, HORIZ CUT, THETA=90

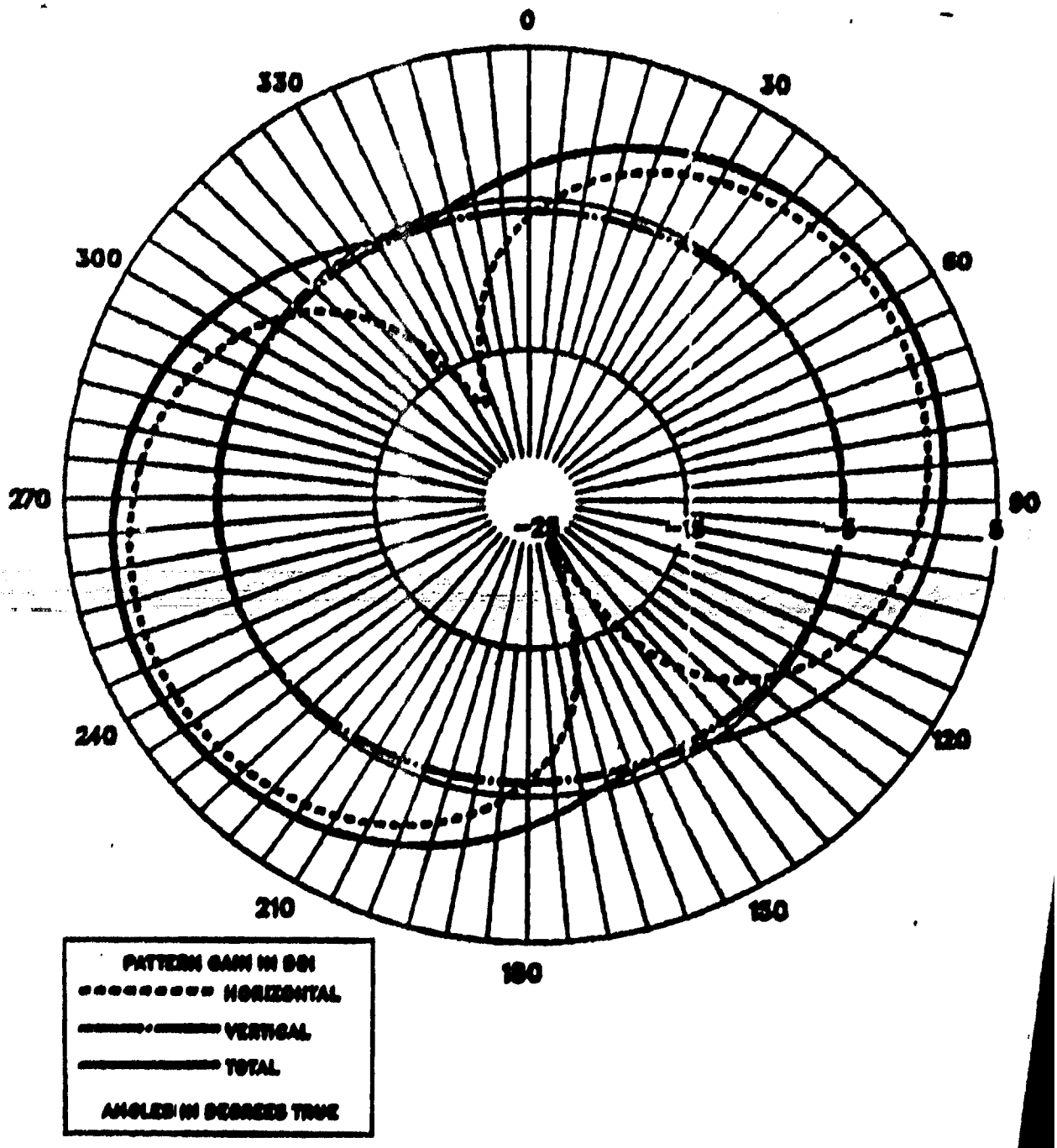

H60 IGUANA DATA RUN AT 4.040MHZ ON 8/18/87

CG 437R-2 ANT, FREE SPACE, HORIZ CUT, THETA=26

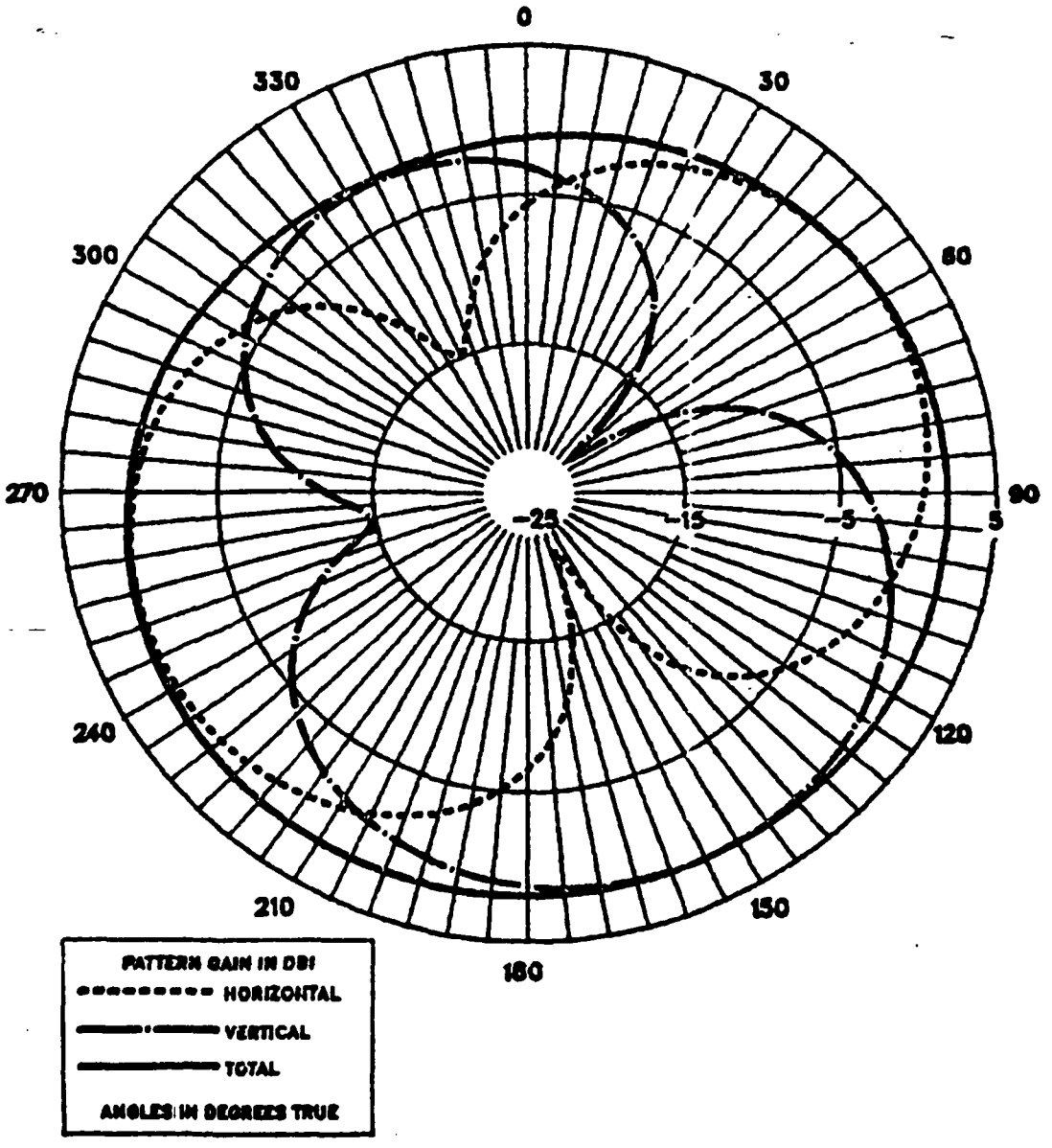

H60 IGUANA DATA RUN AT 4.040MHZ ON 8/18/87

CG 437R-2 ANT, FREE SPACE, VERT CUT, PHI=0

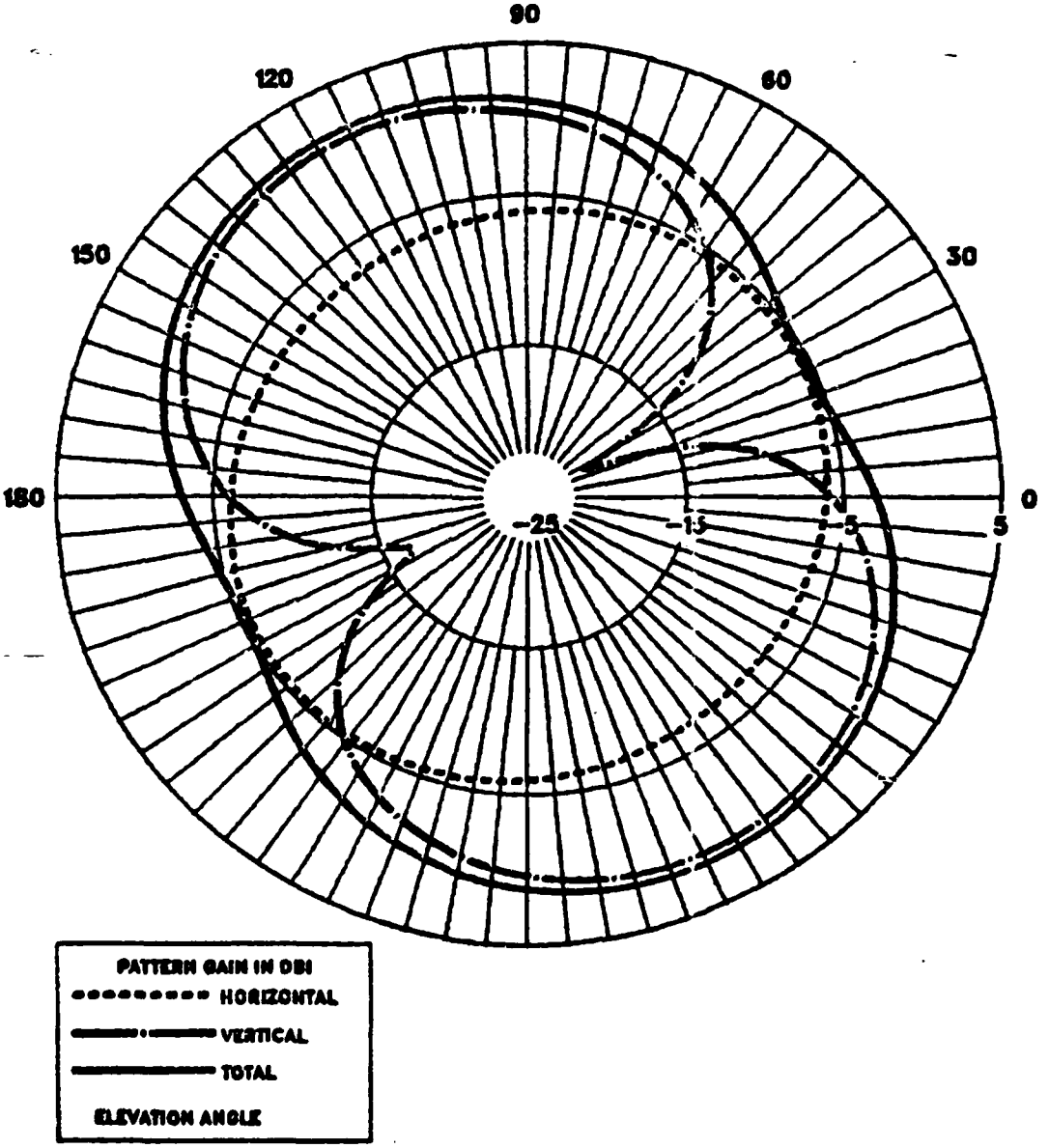

H60 IGUANA DATA RUN AT 4.040MHZ ON 8/18/87

CG 437R-2 ANT, FREE SPACE, VERT CUT, PHI=45

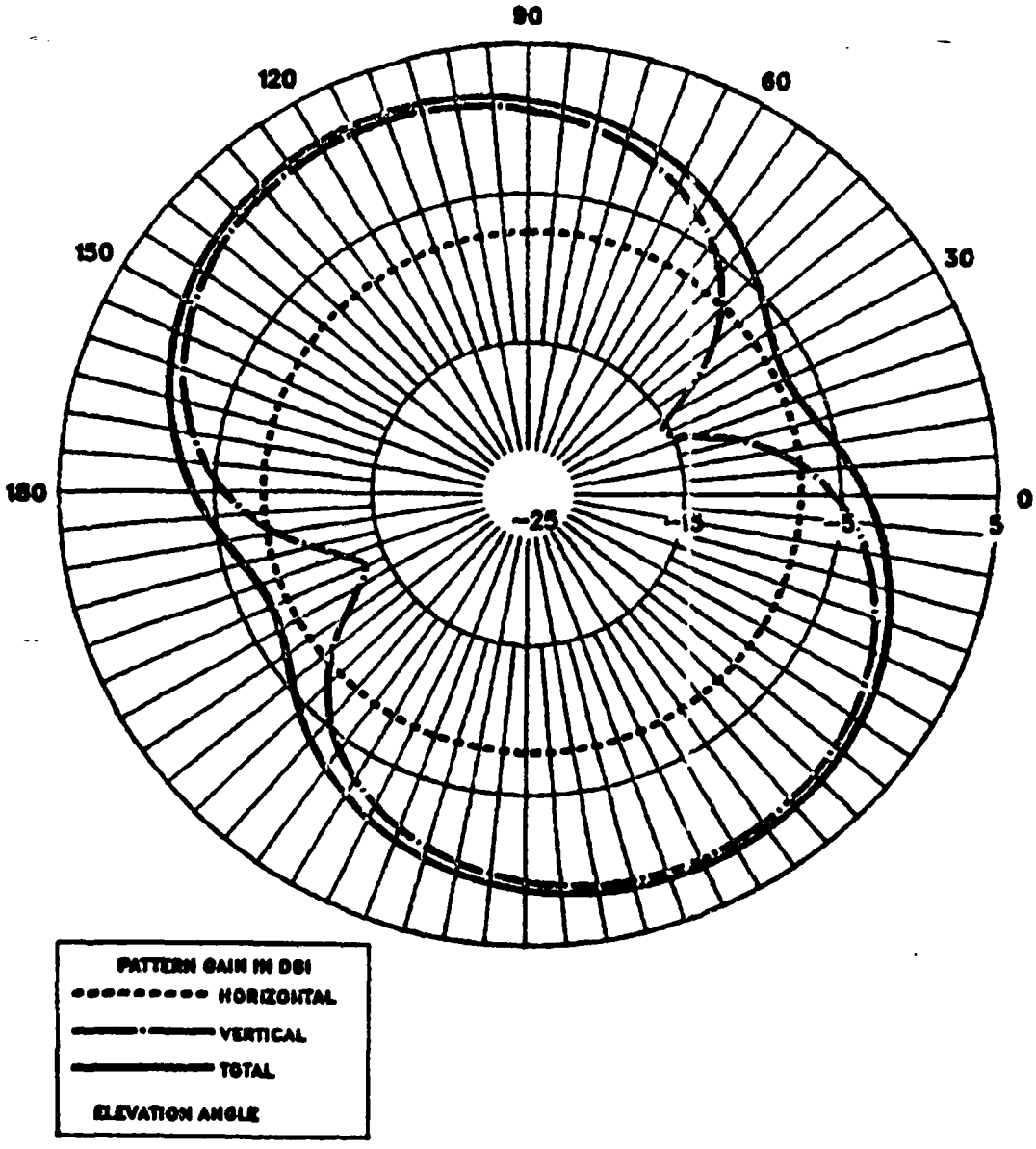

H60 IGUANA DATA RUN AT 4.040MHZ ON 8/18/87

ARMY–TYPE TUBE ANT, FREE SPACE, HORIZ CUT, THETA=90

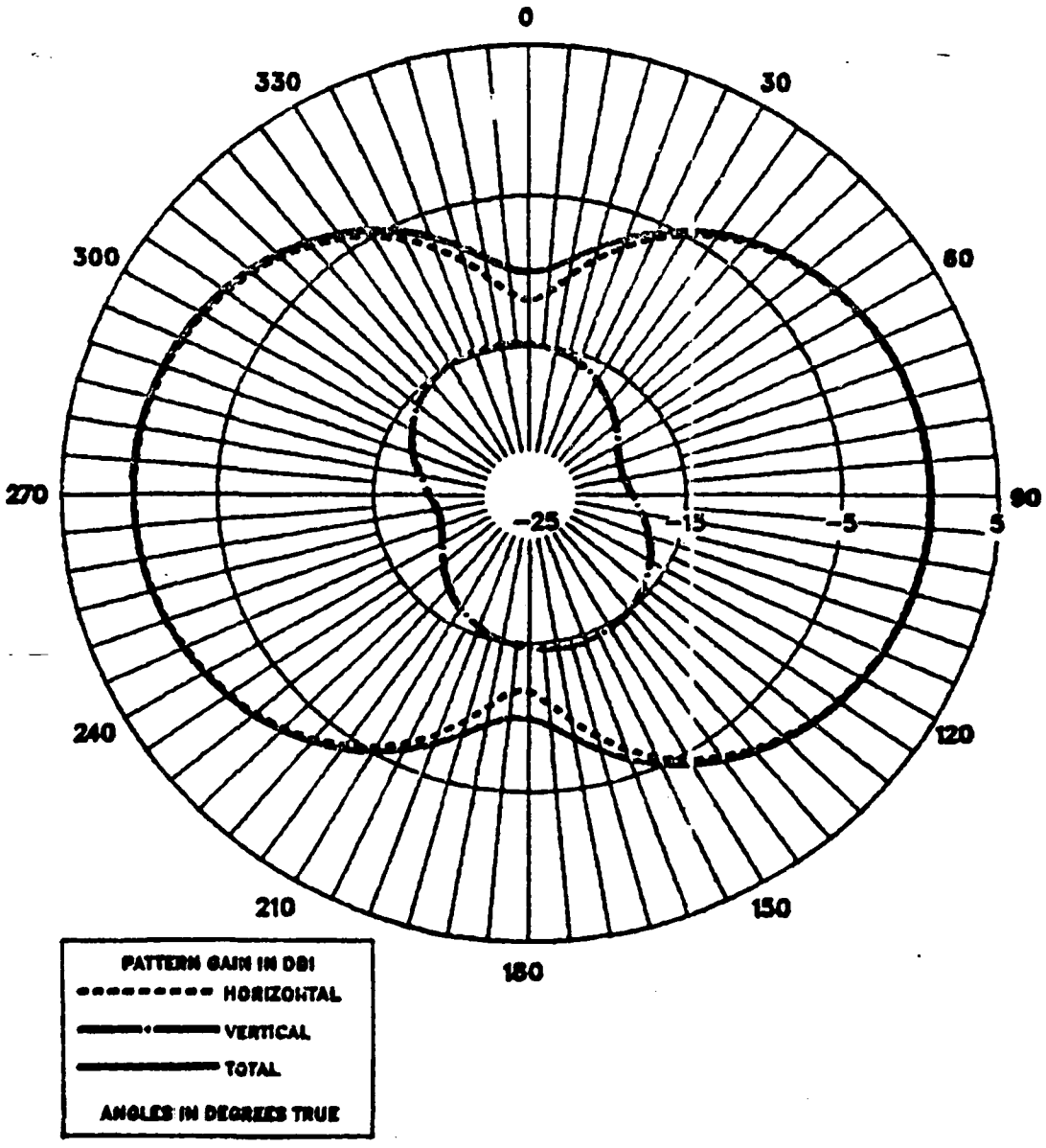

H60 IGUANA DATA RUN AT 4.040MHZ ON 8/18/87

ARMY–TYPE TUBE ANT, FREE SPACE, HORIZ CUT, THETA=26

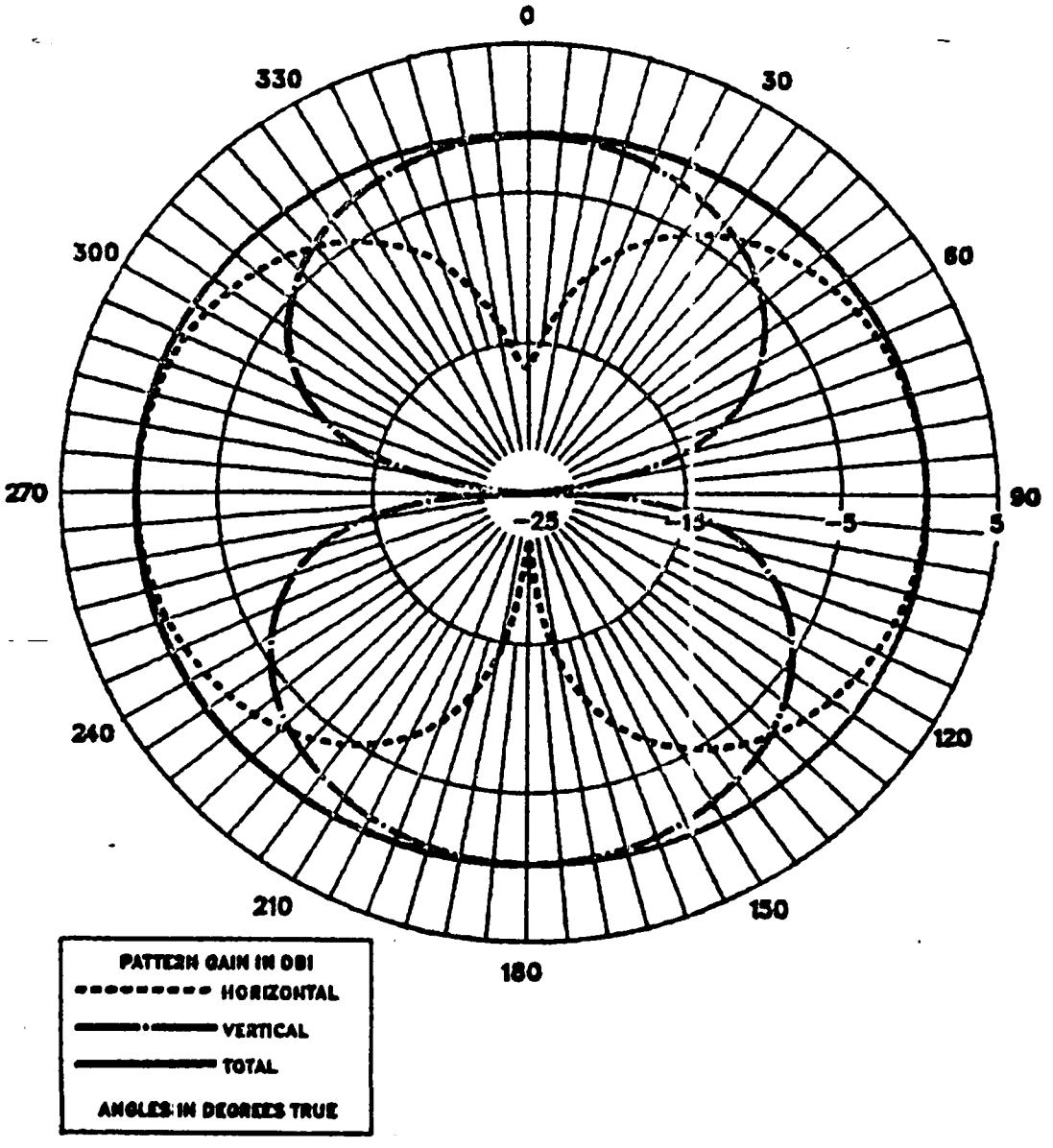

H60 IGUANA DATA RUN AT 4.040MHZ ON 8/18/87

ARMY-TYPE TUBE ANT, FREE SPACE, VERT CUT, PHI=0

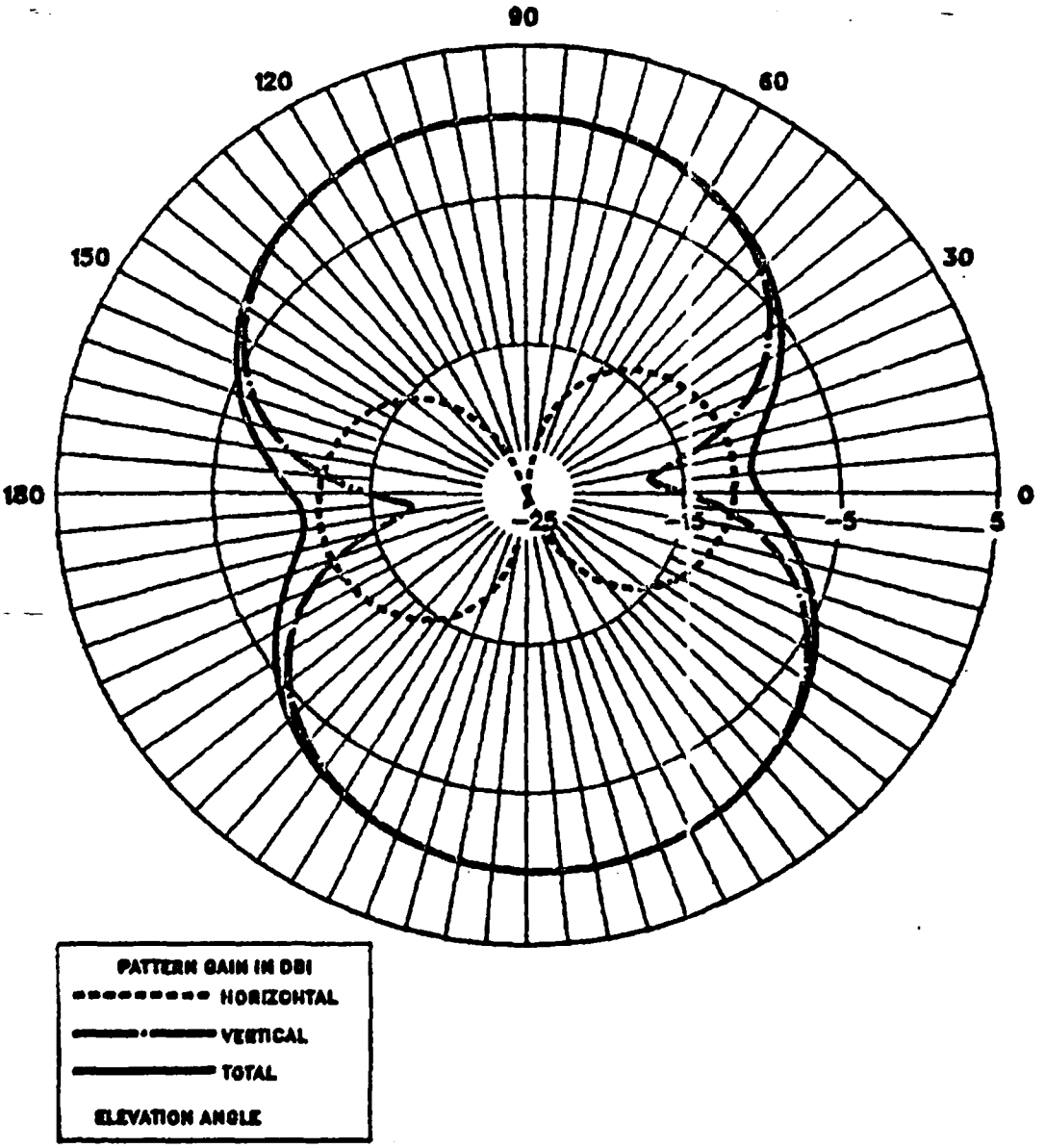

H60 IGUANA DATA RUN AT 4.040MHZ ON 8/18/87

ARMY-TYPE TUBE ANT, FREE SPACE, VERT CUT, PHI=45

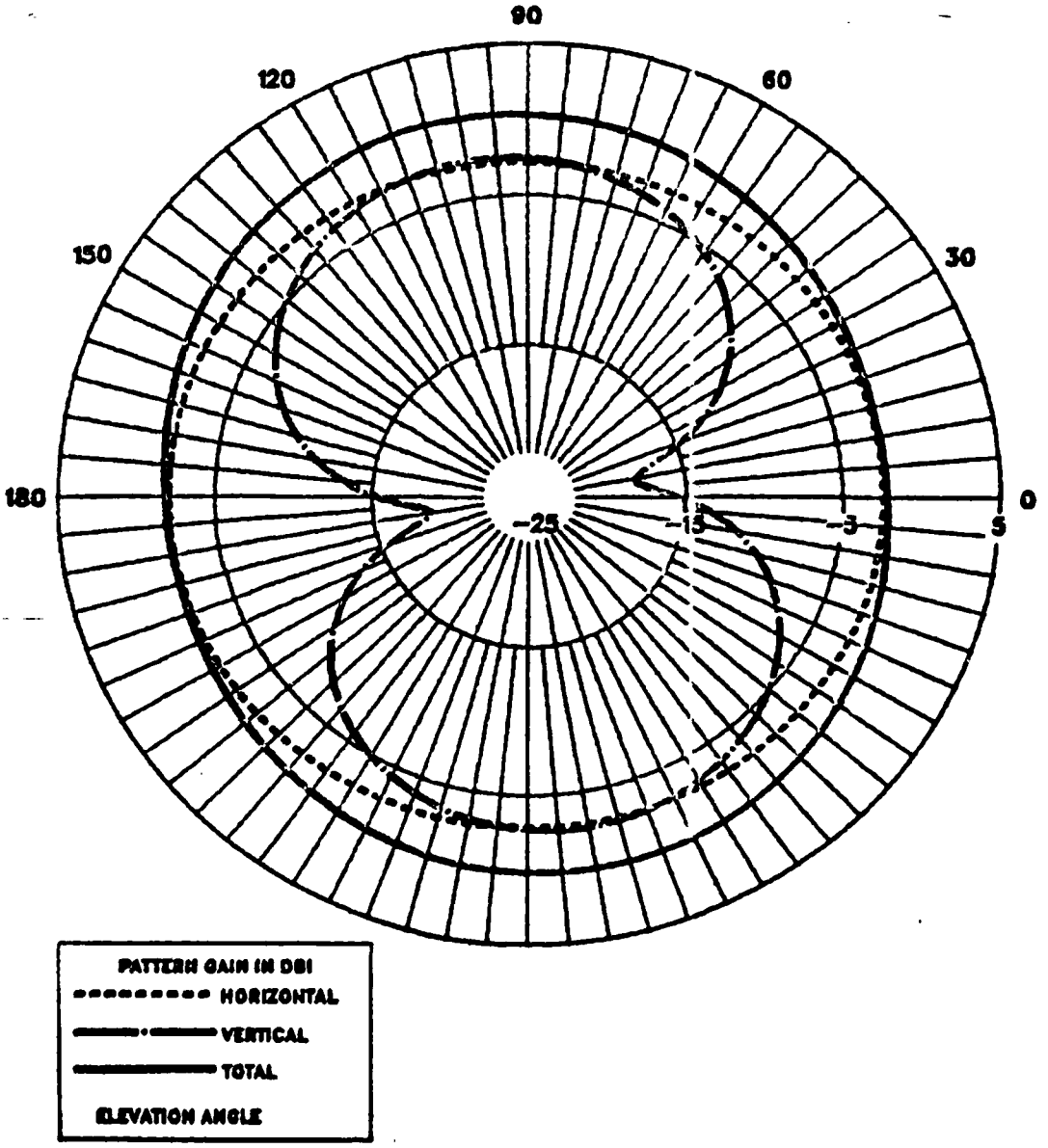

H60 IGUANA DATA RUN AT 5.696MHZ ON 8/20/87

LONG-WIRE ANT, FREE SPACE, HORIZ CUT, THETA=90

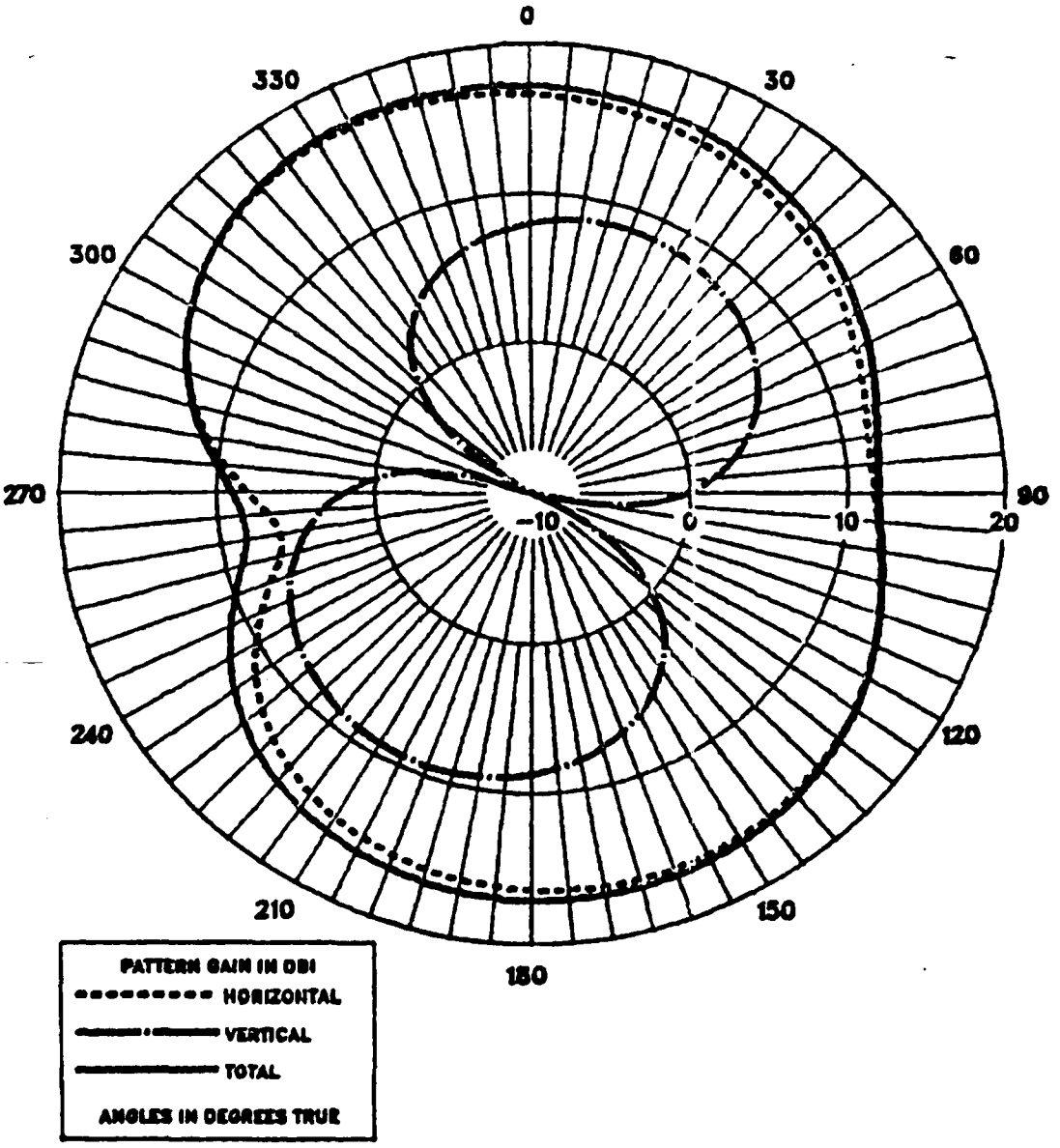

H60 IGUANA DATA RUN AT 5.696MHZ ON 8/20/87

LONG-WIRE ANT, FREE SPACE, HORIZ CUT, THETA=26

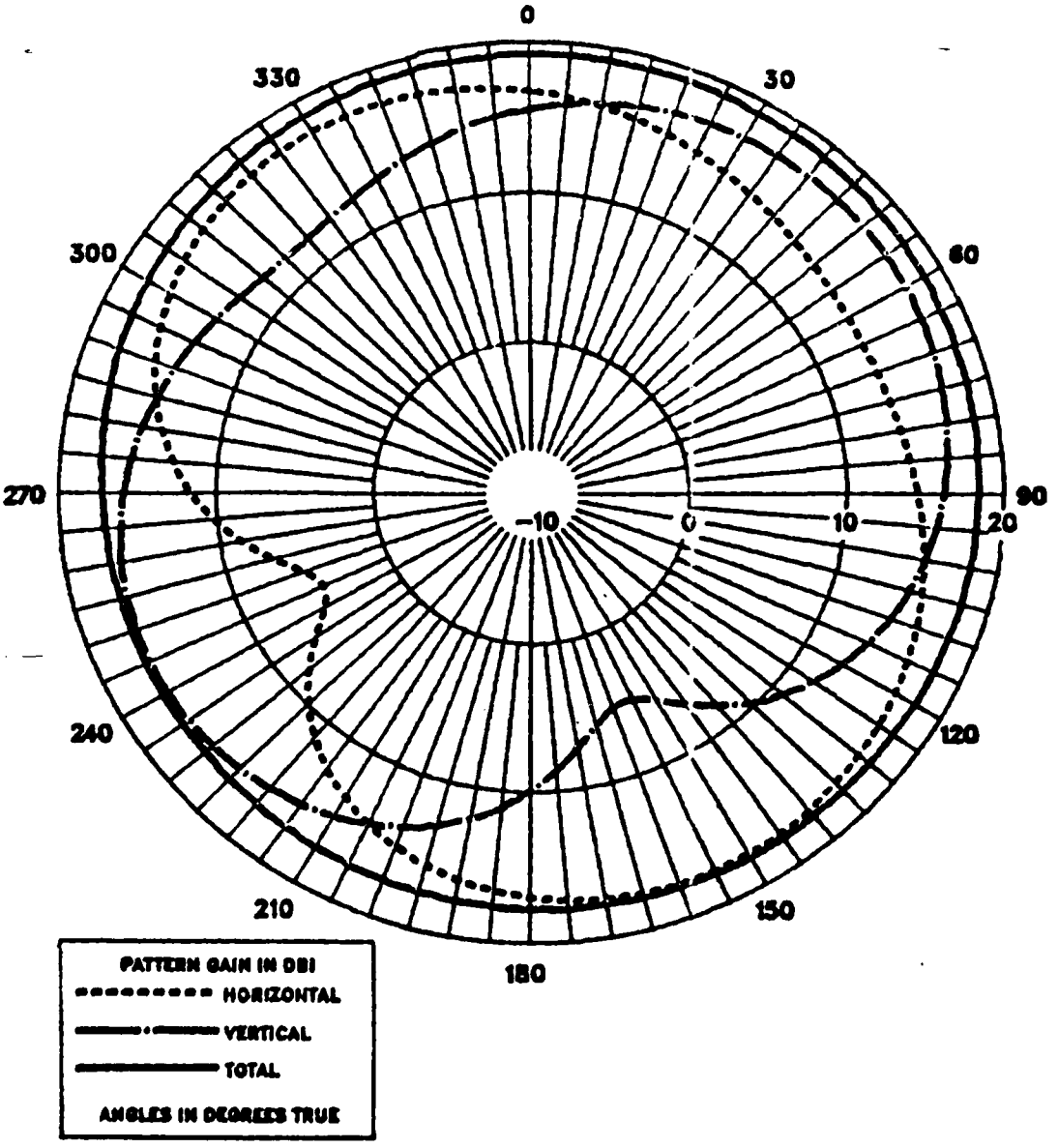

H60 IGUANA DATA RUN AT 5.696MHZ ON 8/20/87

LONG-WIRE ANT, FREE SPACE, VERT CUT, PHI=0

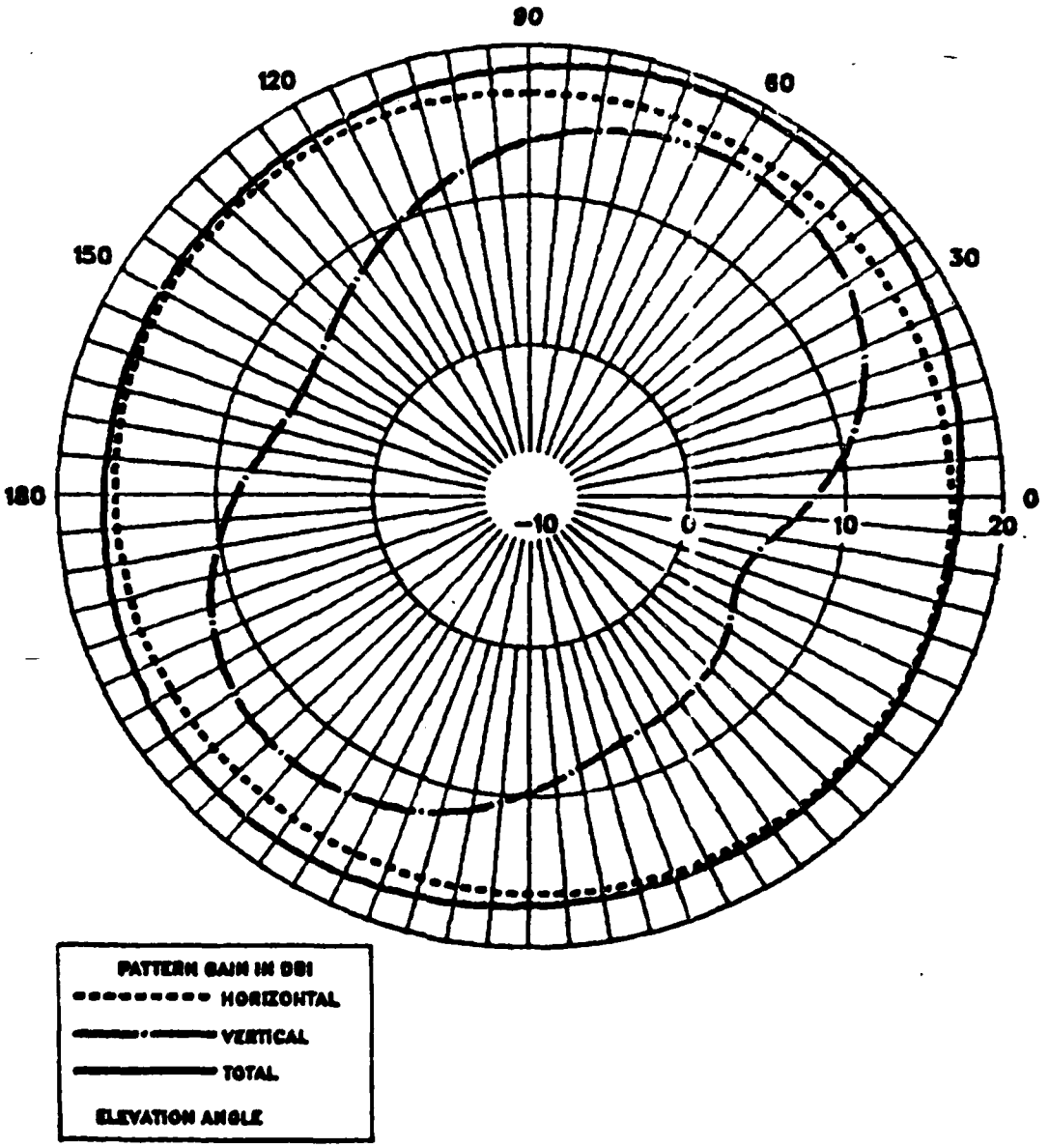

H60 IGUANA DATA RUN AT 5.696MHZ ON 8/20/87

LONG-WIRE ANT, FREE SPACE, VERT CUT, PHI=45

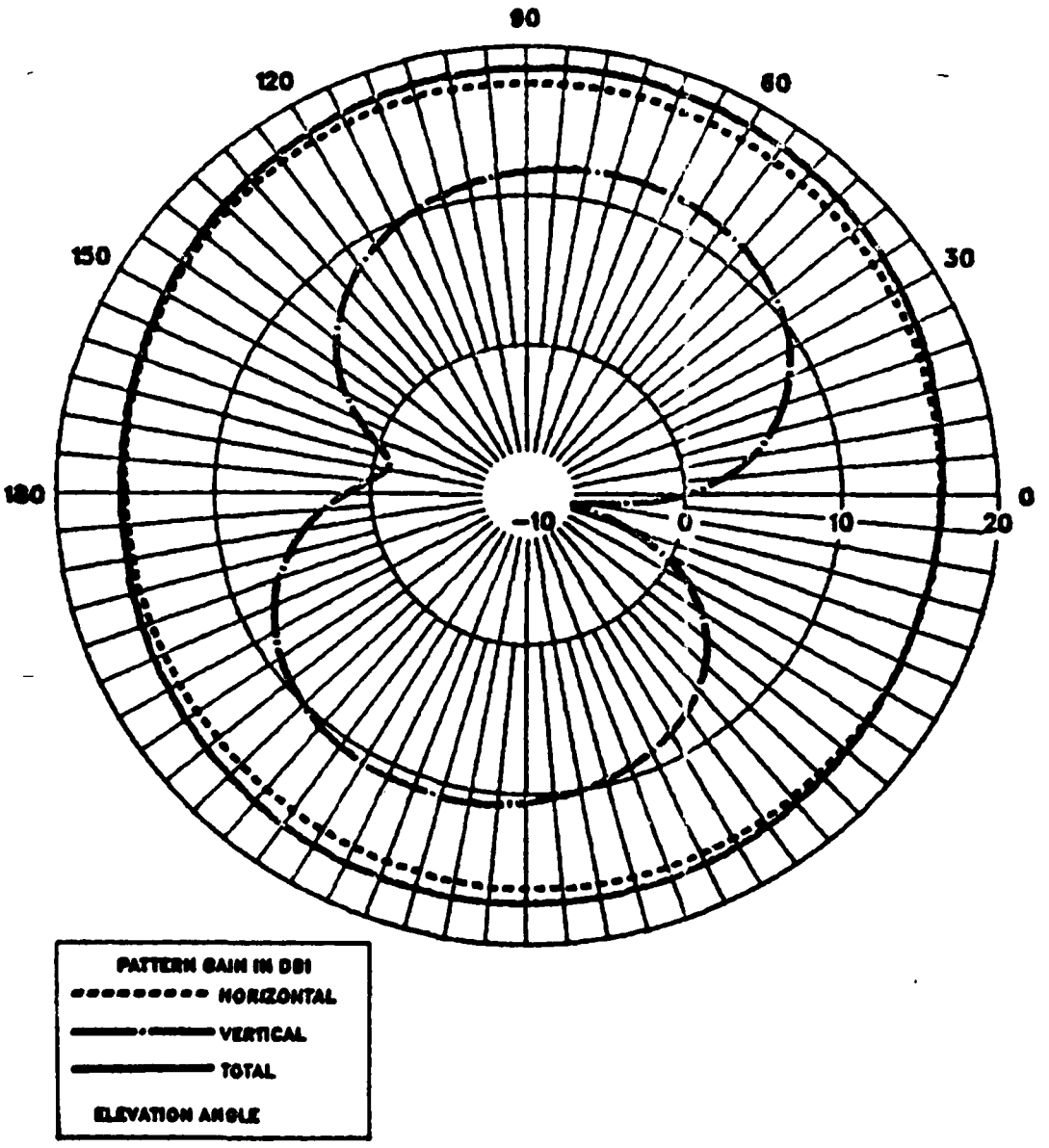

H60 IGUANA DATA RUN AT 5.696MHZ ON 8/20/87

NAVY 437R-2, FREE SPACE, HORIZ CUT, THETA=90

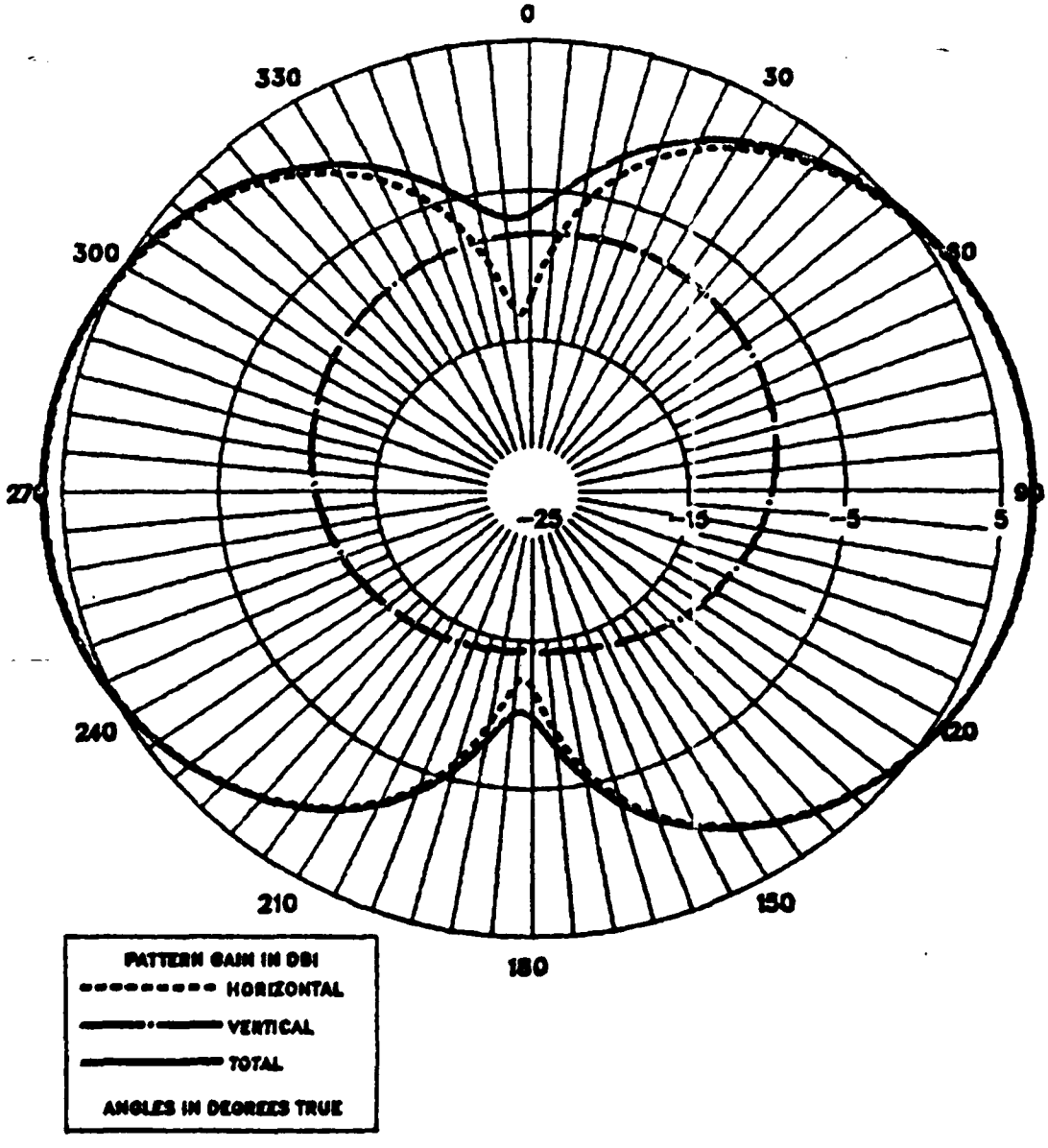

H60 IGUANA DATA RUN AT 5.696MHZ ON 8/20/87

NAVY 437R-2, FREE SPACE, HORIZ CUT, THETA=26

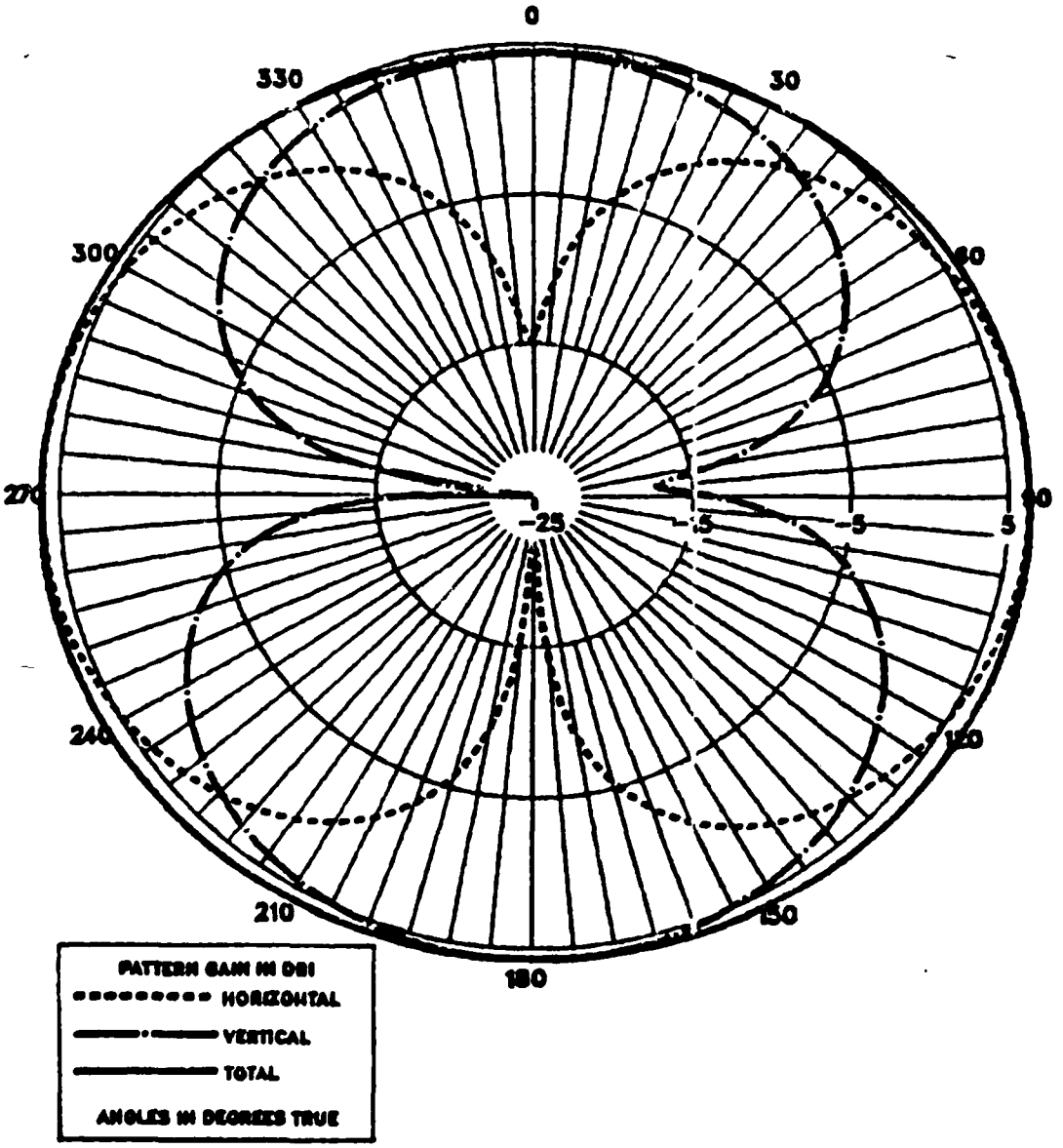

H60 IGUANA DATA RUN AT 5.696MHZ ON 8/20/87

NAVY 437R-2, FREE SPACE, VERT CUT, PHI=0

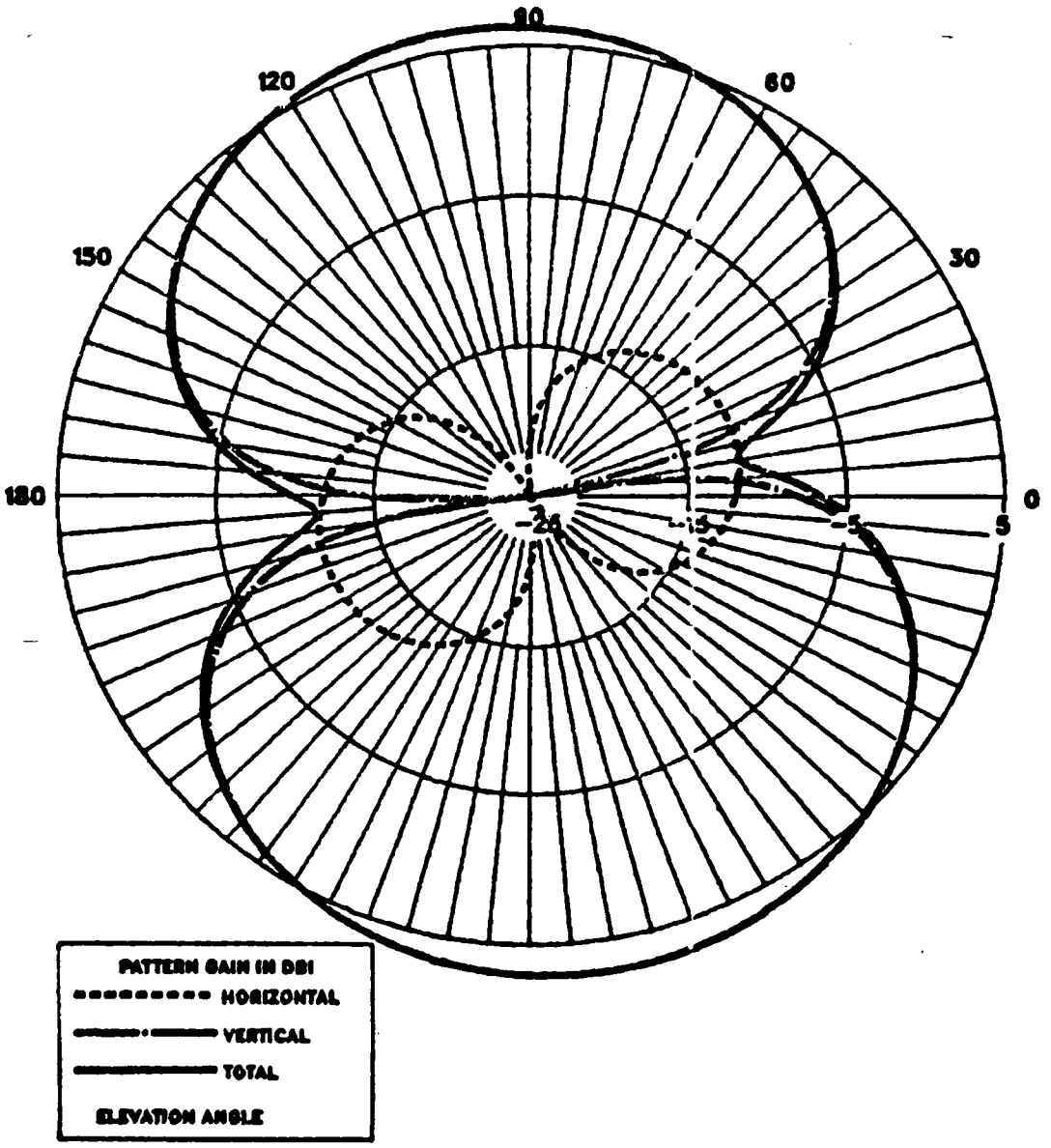

H60 IGUANA DATA RUN AT 5.696MHZ ON 8/20/87

NAVY 437R-2, FREE SPACE, VERT CUT, PHI=45

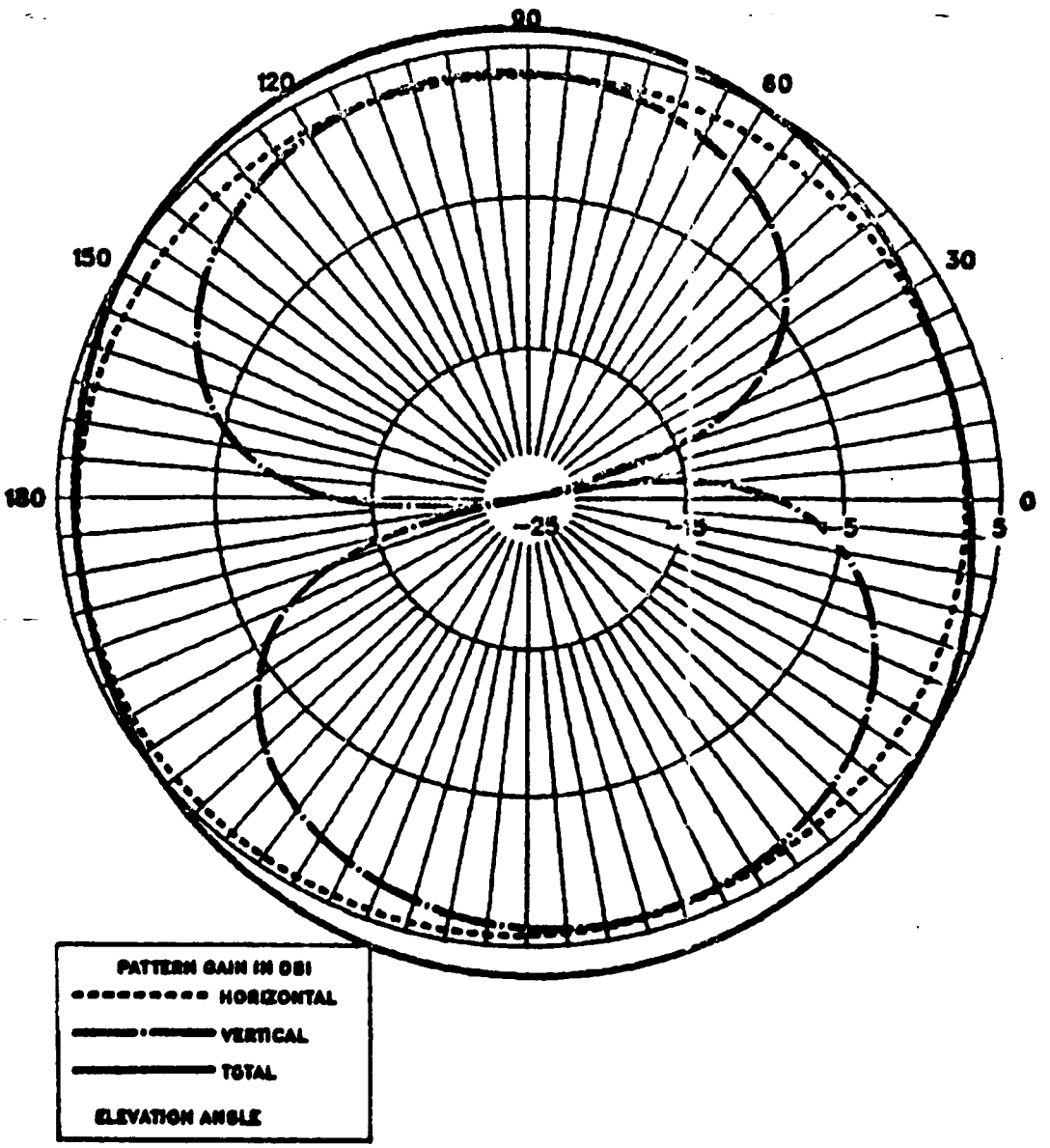

H60 IGUANA DATA RUN AT 5.696MHZ ON 8/20/87

CG 437R-2 ANT, FREE SPACE, HORIZ CUT, THETA=90

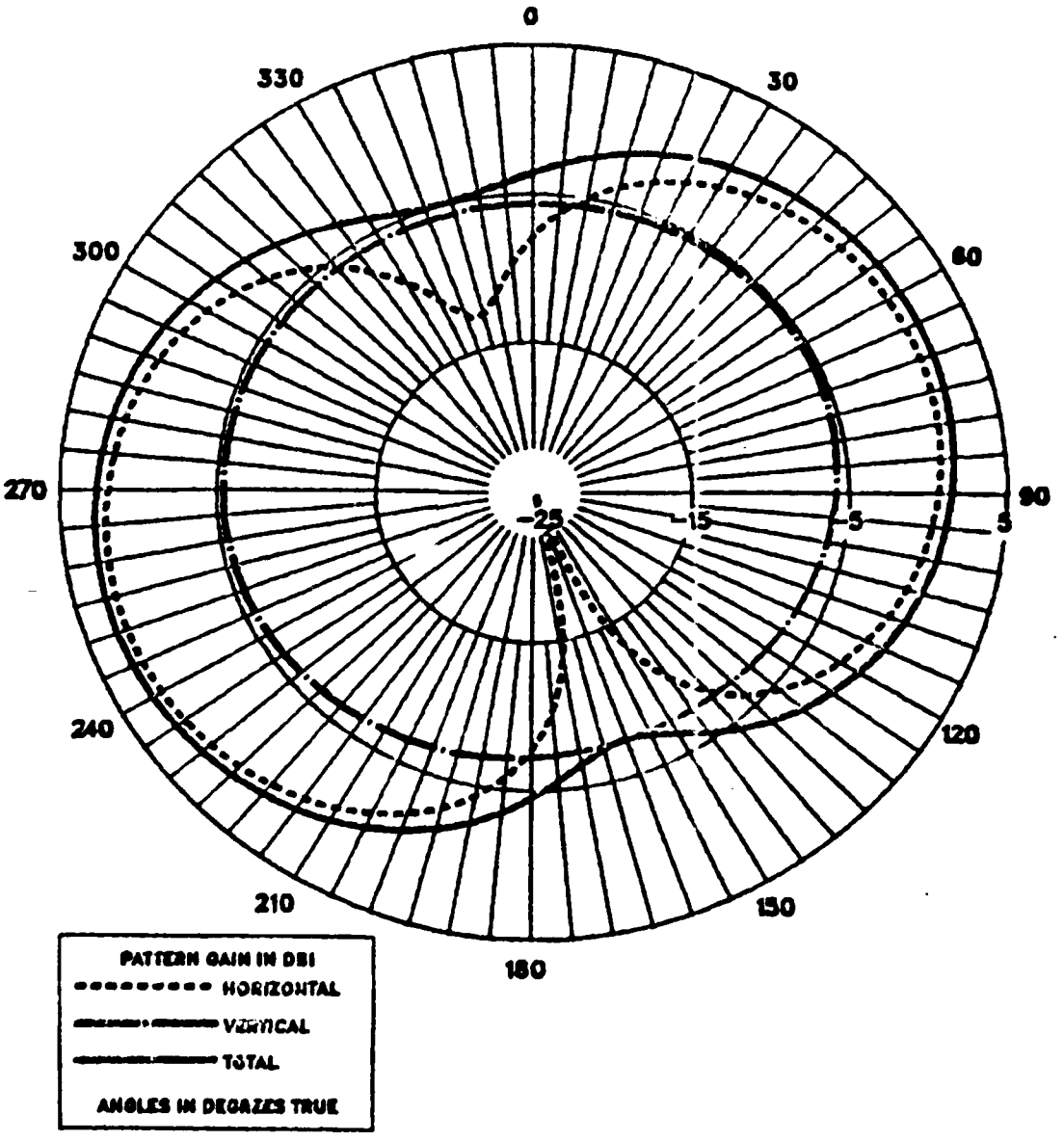

H60 IGUANA DATA RUN AT 5.696MHZ ON 8/20/87

CG 437R-2 ANT, FREE SPACE, HORIZ CUT, THETA=26

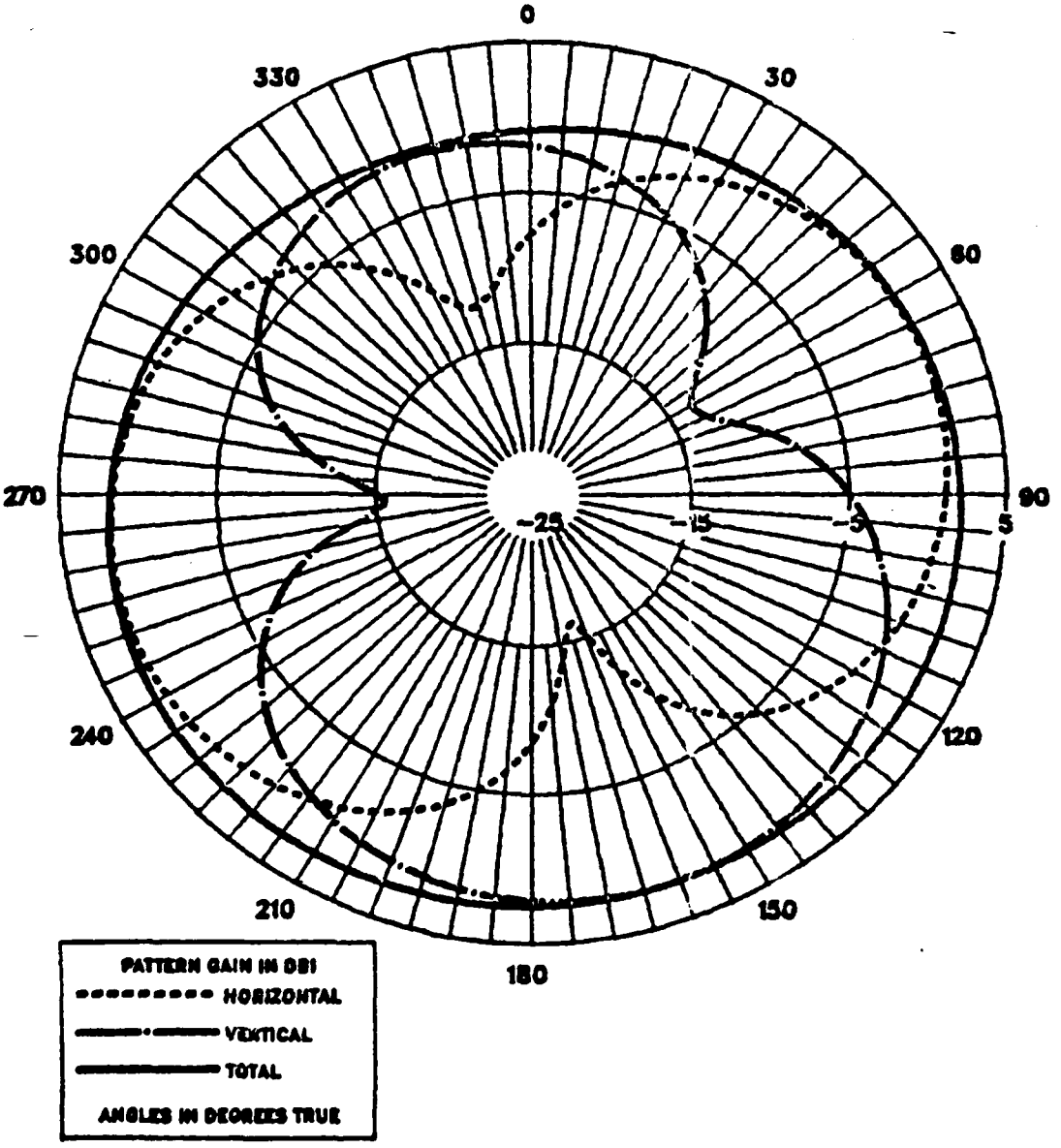

H60 IGUANA DATA RUN AT 5.696MHZ ON 8/20/87

CG 437R-2 ANT, FREE SPACE, VERT CUT, PHI=0

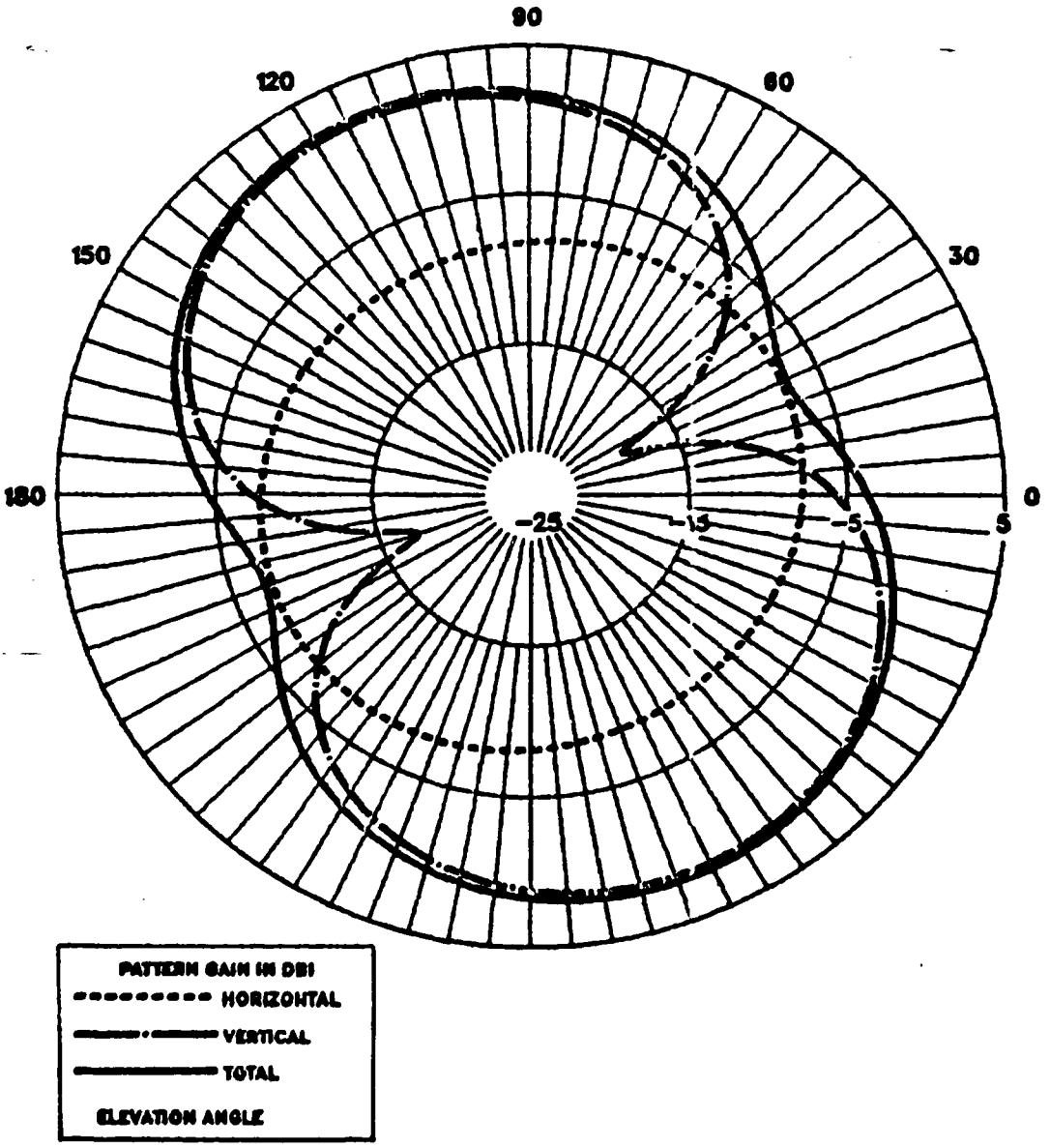

H60 IGUANA DATA RUN AT 5.696MHZ ON 8/20/87

CG 437R-2 ANT, FREE SPACE, VERT CUT, PHI=45

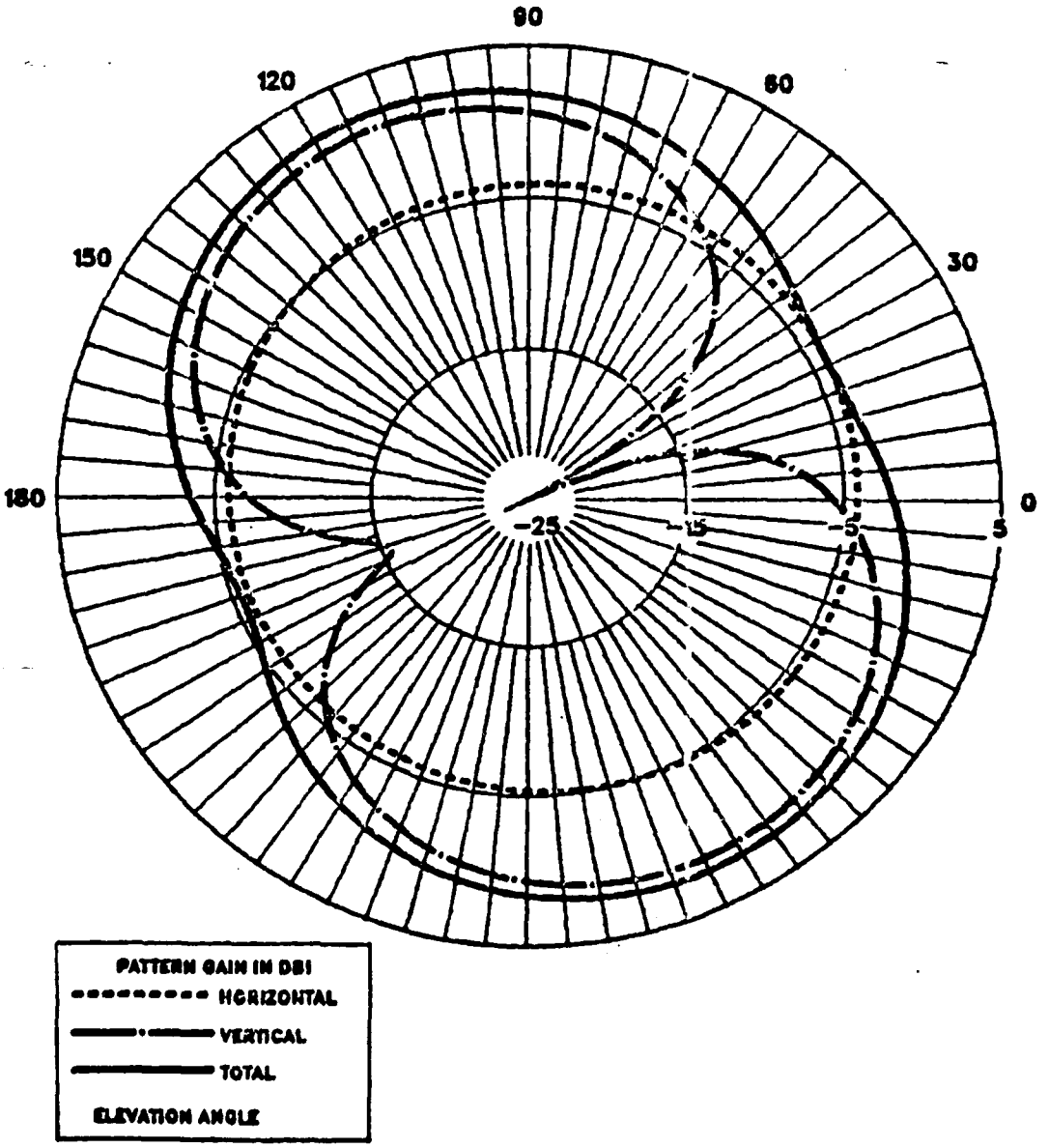

H60 IGUANA DATA RUN AT 5.696MHZ ON 8/20/87

ARMY-TYPE TUBE ANT, FREE SPACE, HORIZ CUT, THETA=90

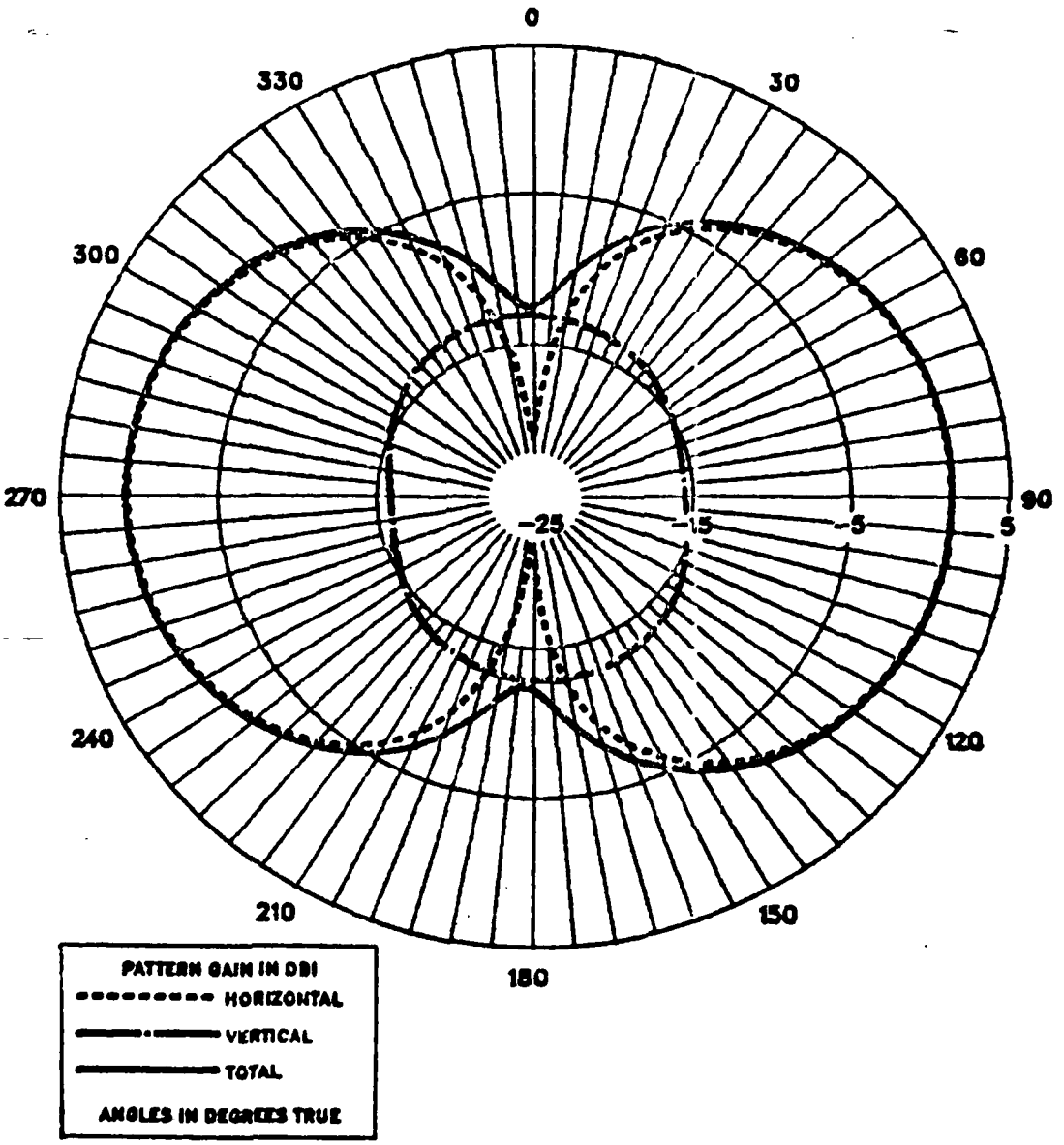

H60 IGUANA DATA RUN AT 5.696MHZ ON 8/20/87

ARMY-TYPE TUBE ANT, FREE SPACE, HORIZ CUT, THETA=26

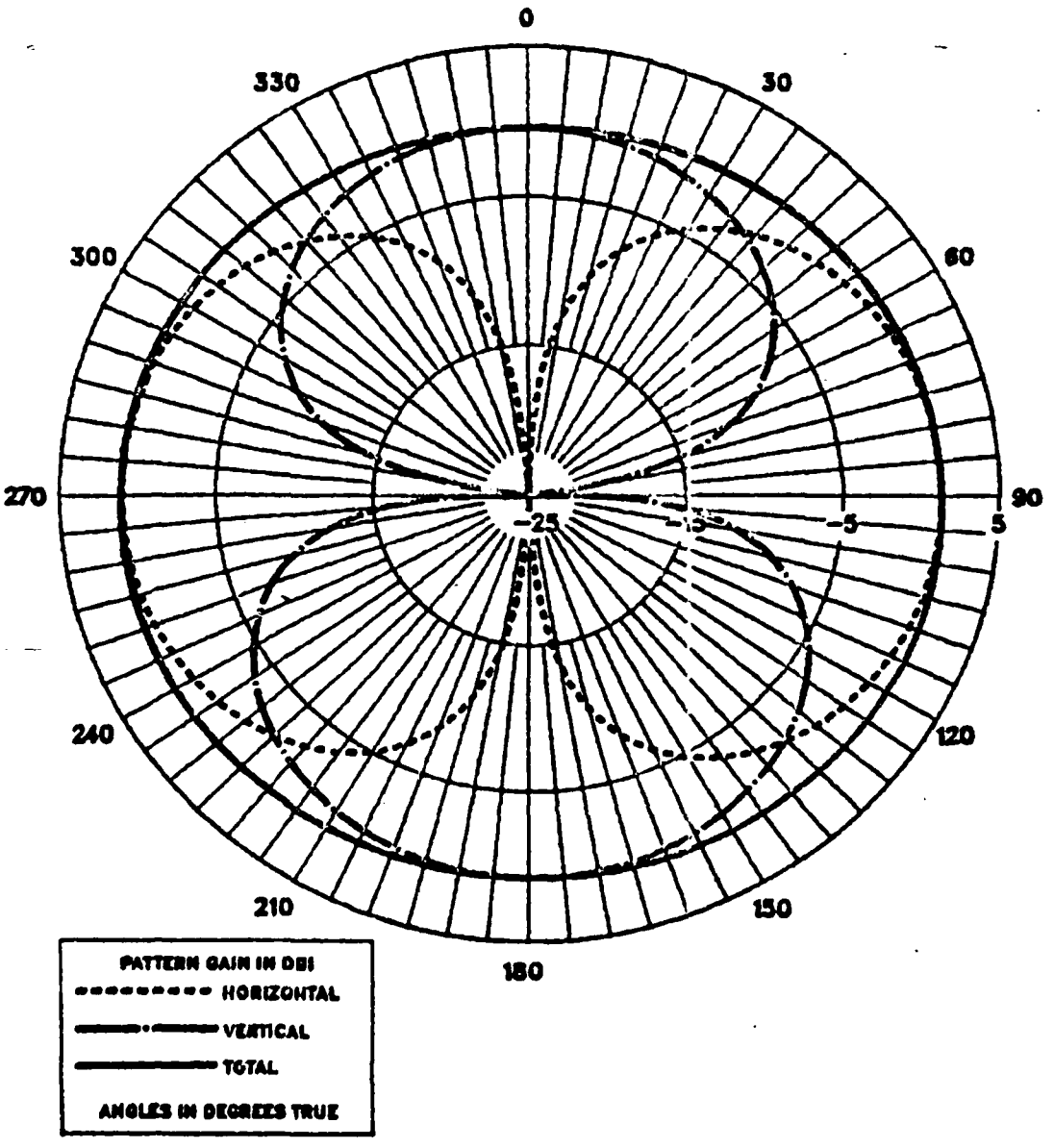

H60 IGUANA DATA RUN AT 5.696MHZ ON 8/20/87

ARMY-TYPE TUBE ANT, FREE SPACE, VERT CUT, PHI=0

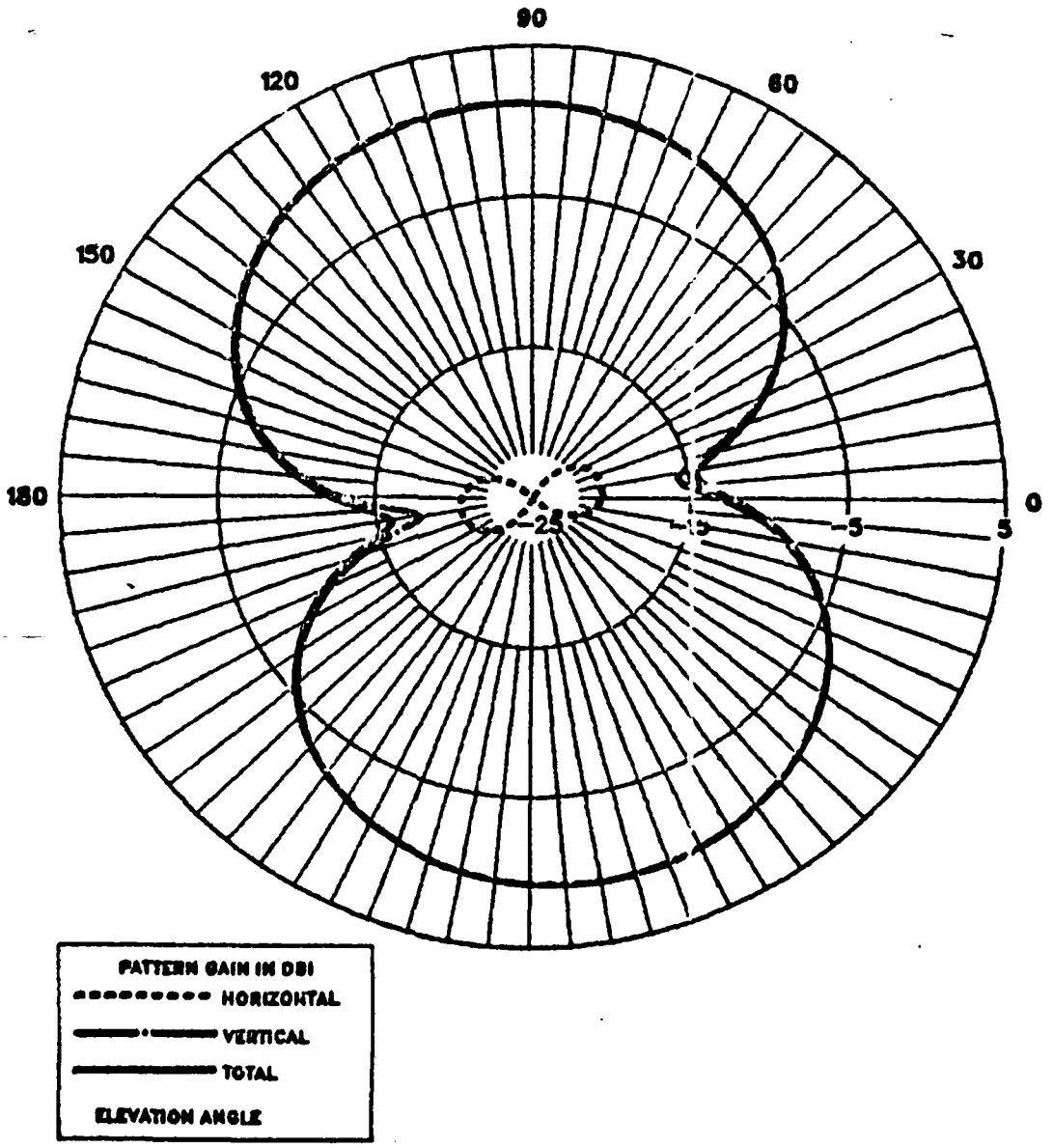

H60 IGUANA DATA RUN AT 5.696MHZ ON 8/20/87

ARMY–TYPE TUBE ANT, FREE SPACE, VERT CUT, PHI=45

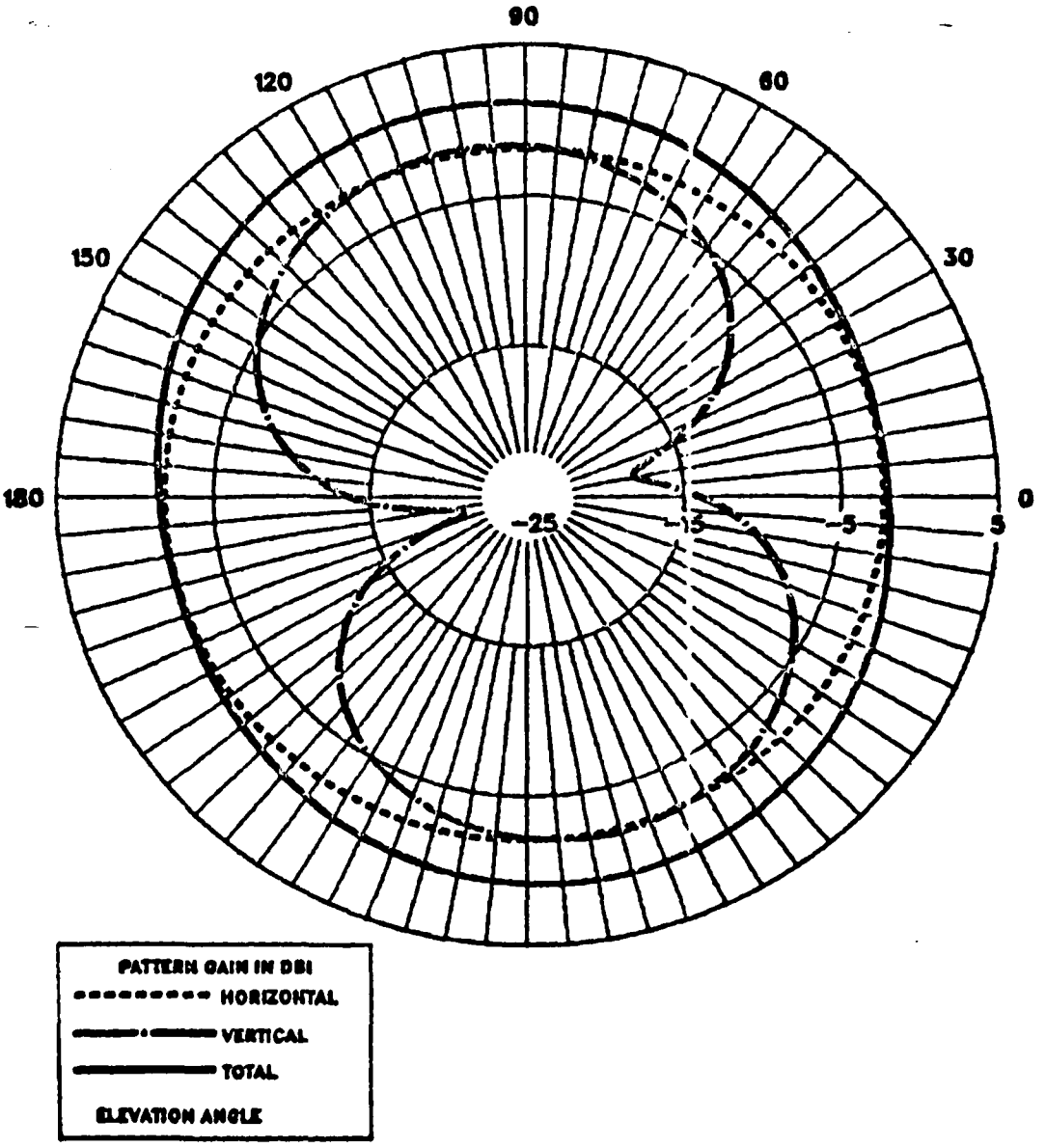

H60 IGUANA DATA RUN AT 7.645MHZ ON 8/21/87

LONG-WIRE ANT, FREE SPACE, HORIZ CUT, THETA=90

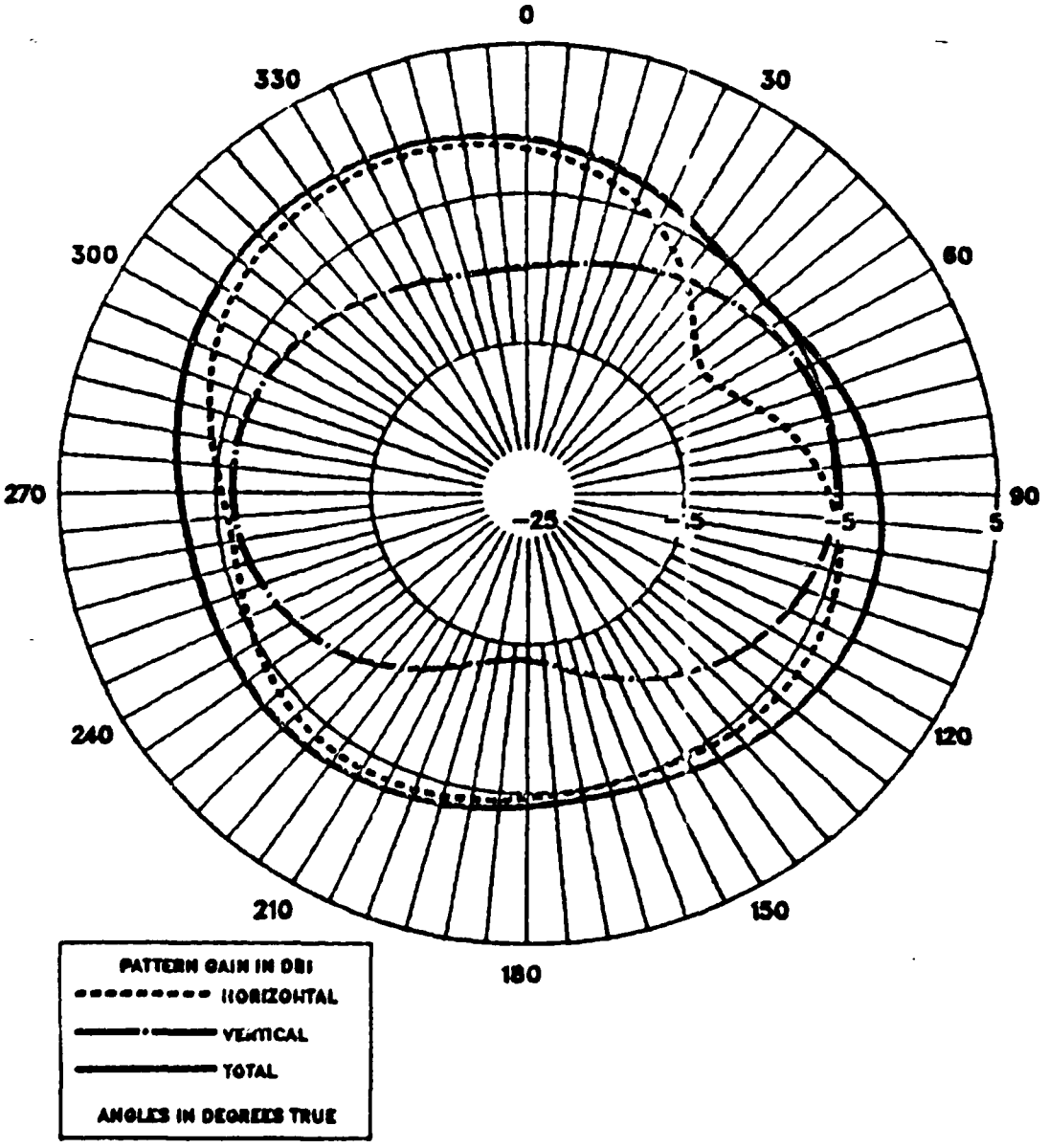

H60 IGUANA DATA RUN AT 7.645MHZ ON 8/21/87

LONG-WIRE ANT, FREE SPACE, HORIZ CUT, THETA=26

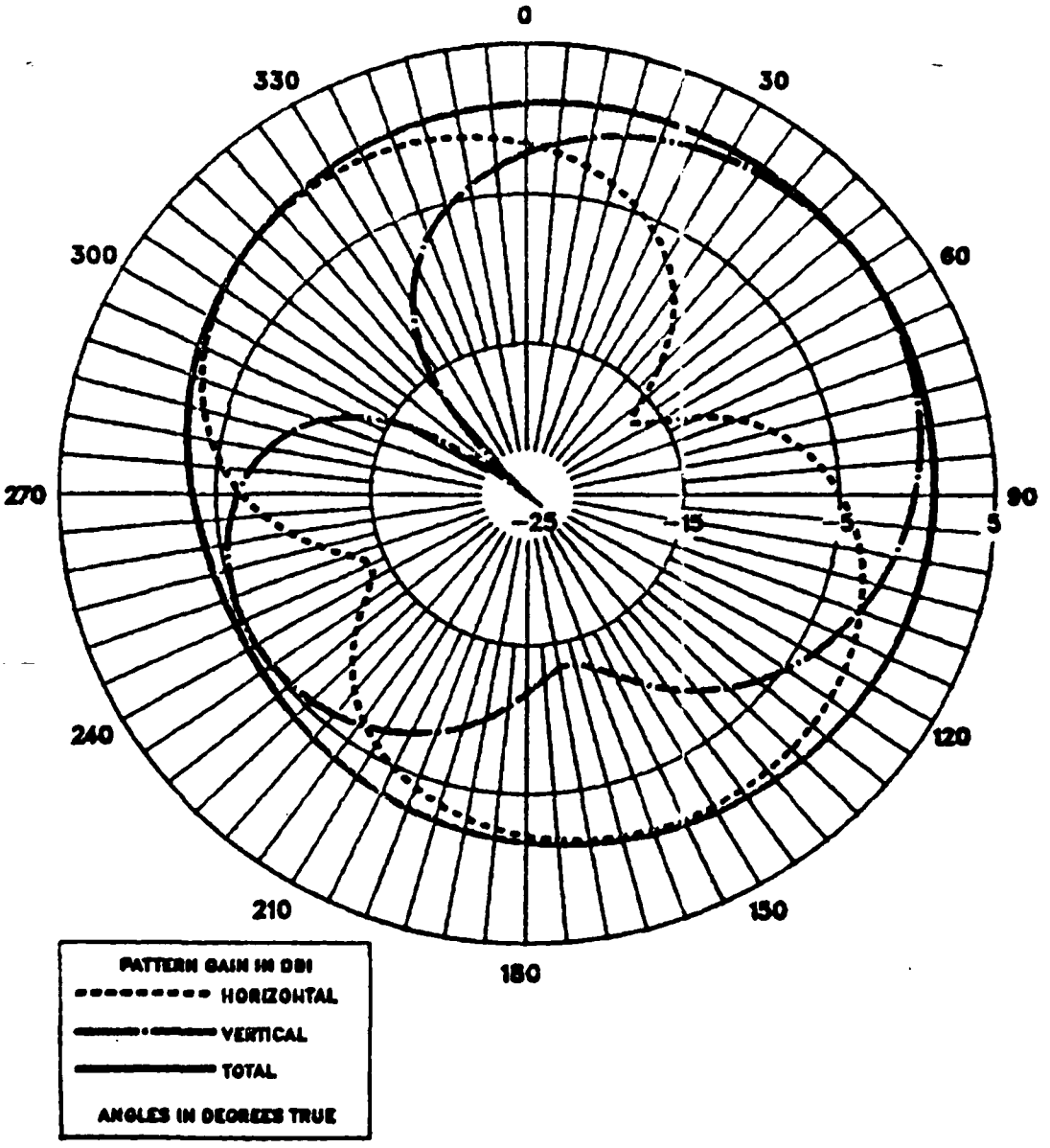

H60 IGUANA DATA RUN AT 7.645MHZ ON 8/21/87

LONG-WIRE ANT, FREE SPACE, VERT CUT, PHI=0

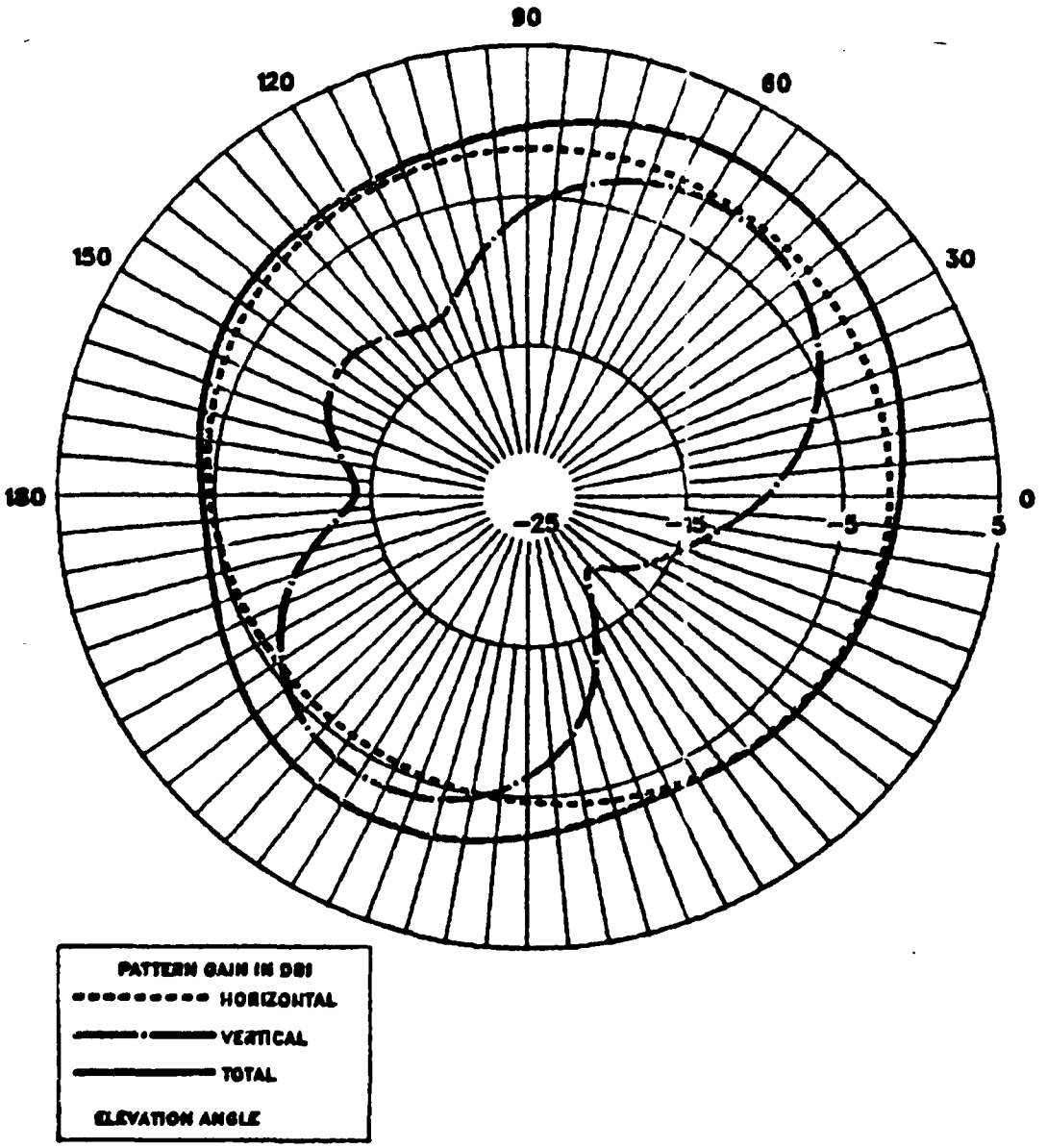

H60 IGUANA DATA RUN AT 7.645MHZ ON 8/21/87

LONG-WIRE ANT, FREE SPACE, VERT CUT, PHI=45

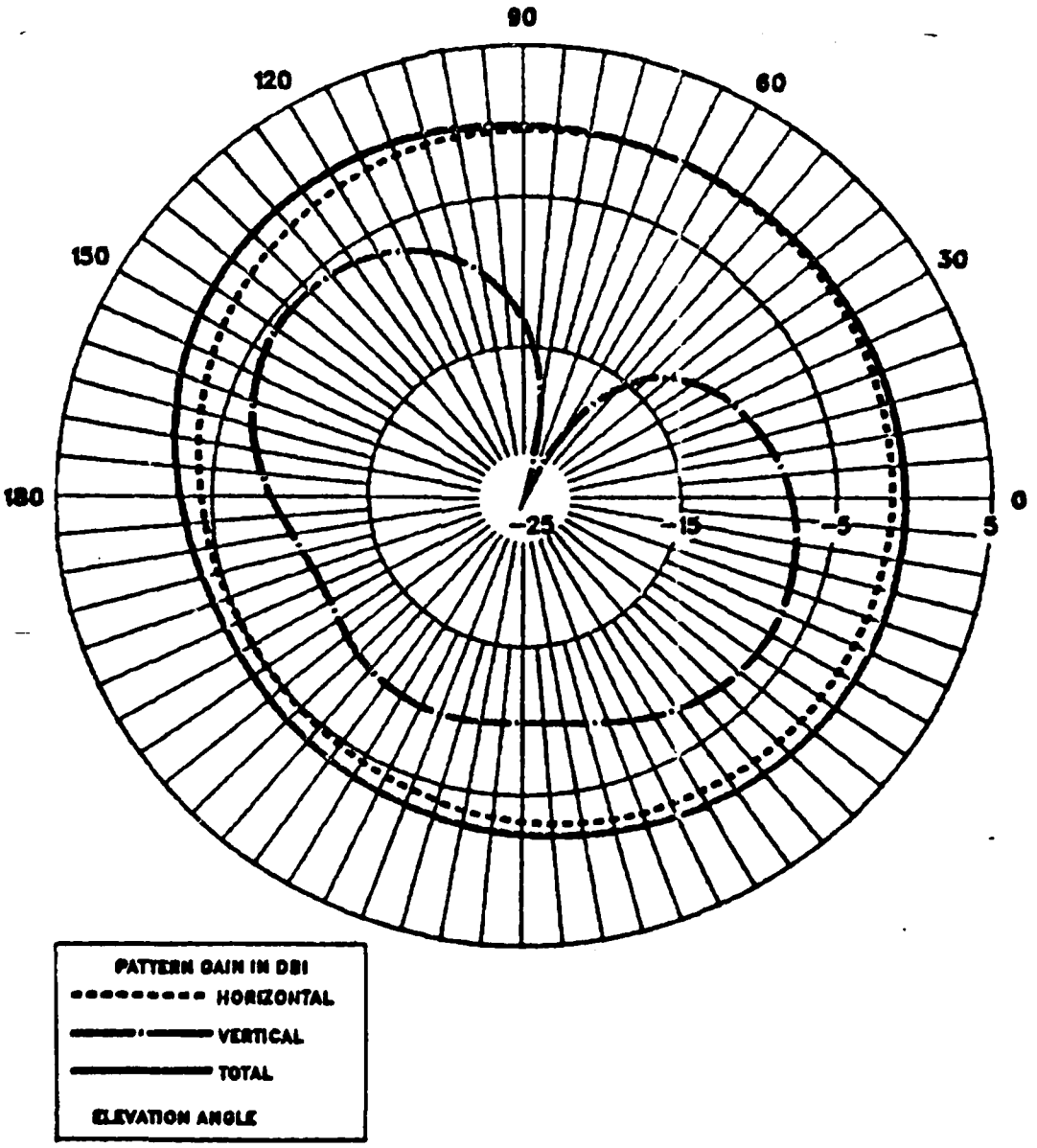

H60 IGUANA DATA RUN AT 7.645MHZ ON 8/21/87

NAVY 437R-2 ANT, FREE SPACE, HORIZ CUT, THETA=90

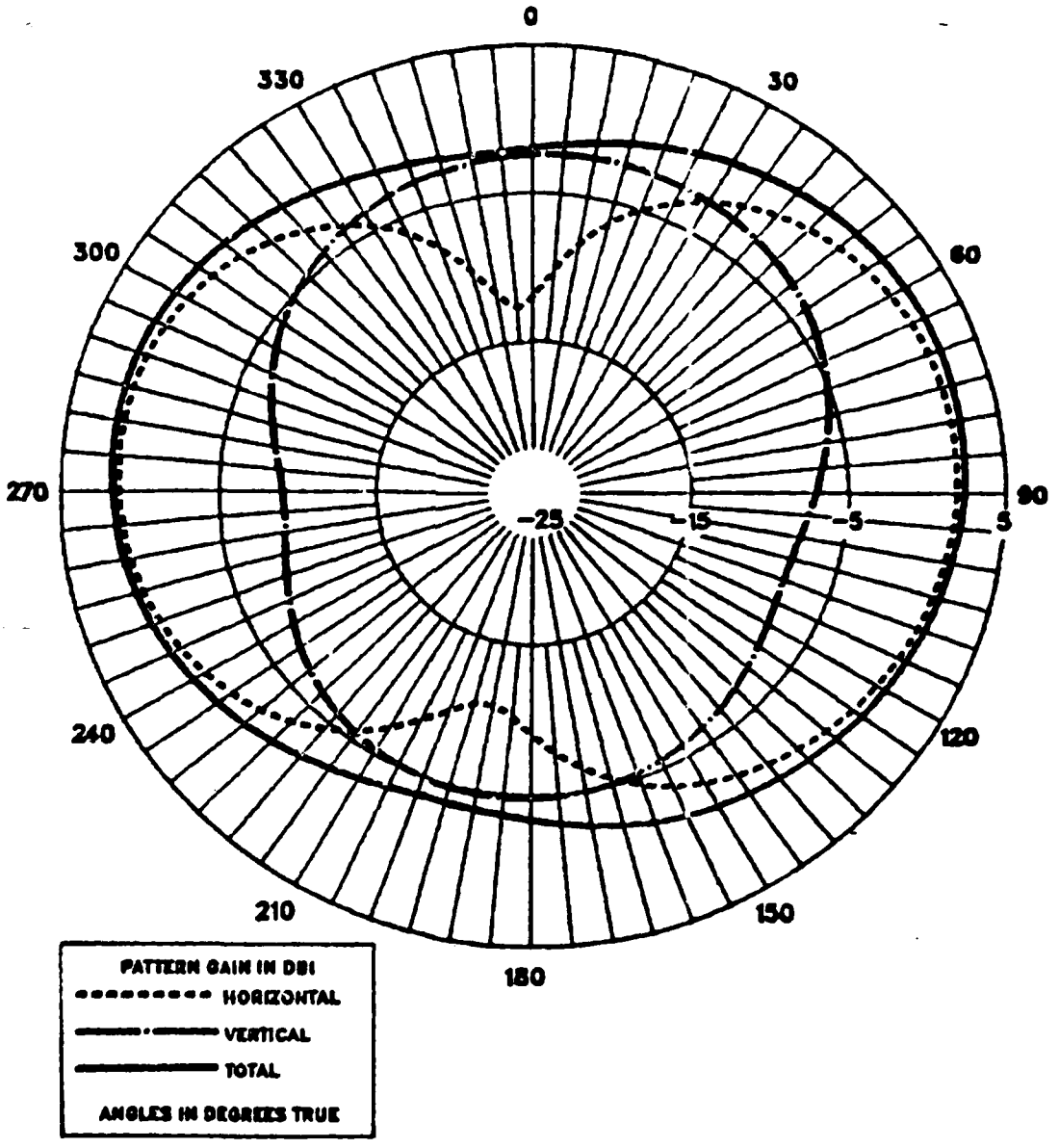

H60 IGUANA DATA RUN AT 7.645MHZ ON 8/21/87

NAVY 437R-2 ANT, FREE SPACE, HORIZ CUT, THETA=26

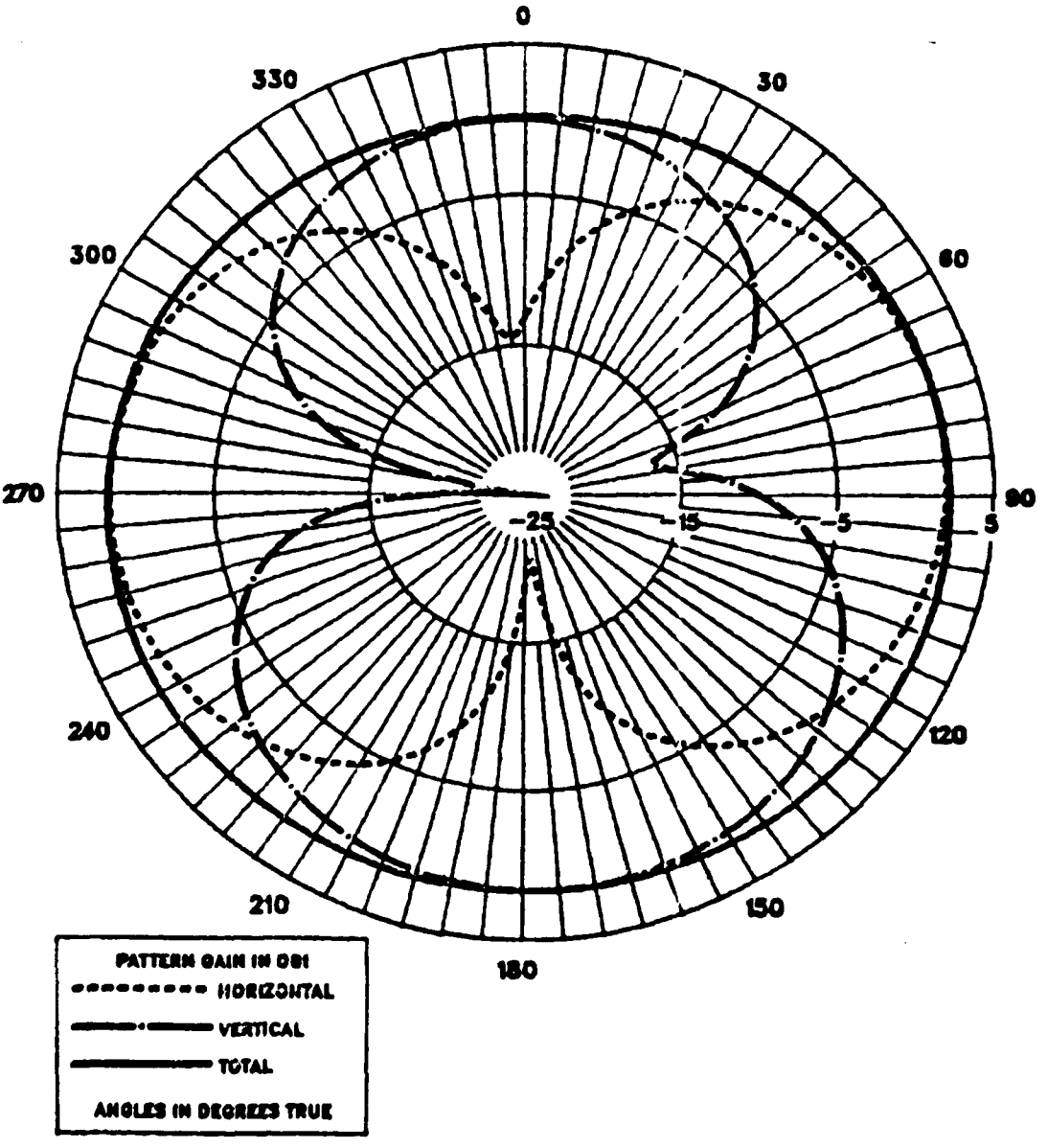

H60 IGUANA DATA RUN AT 7.645MHZ ON 8/21/87

NAVY 437R-2 ANT, FREE SPACE, VERT CUT, PHI=0

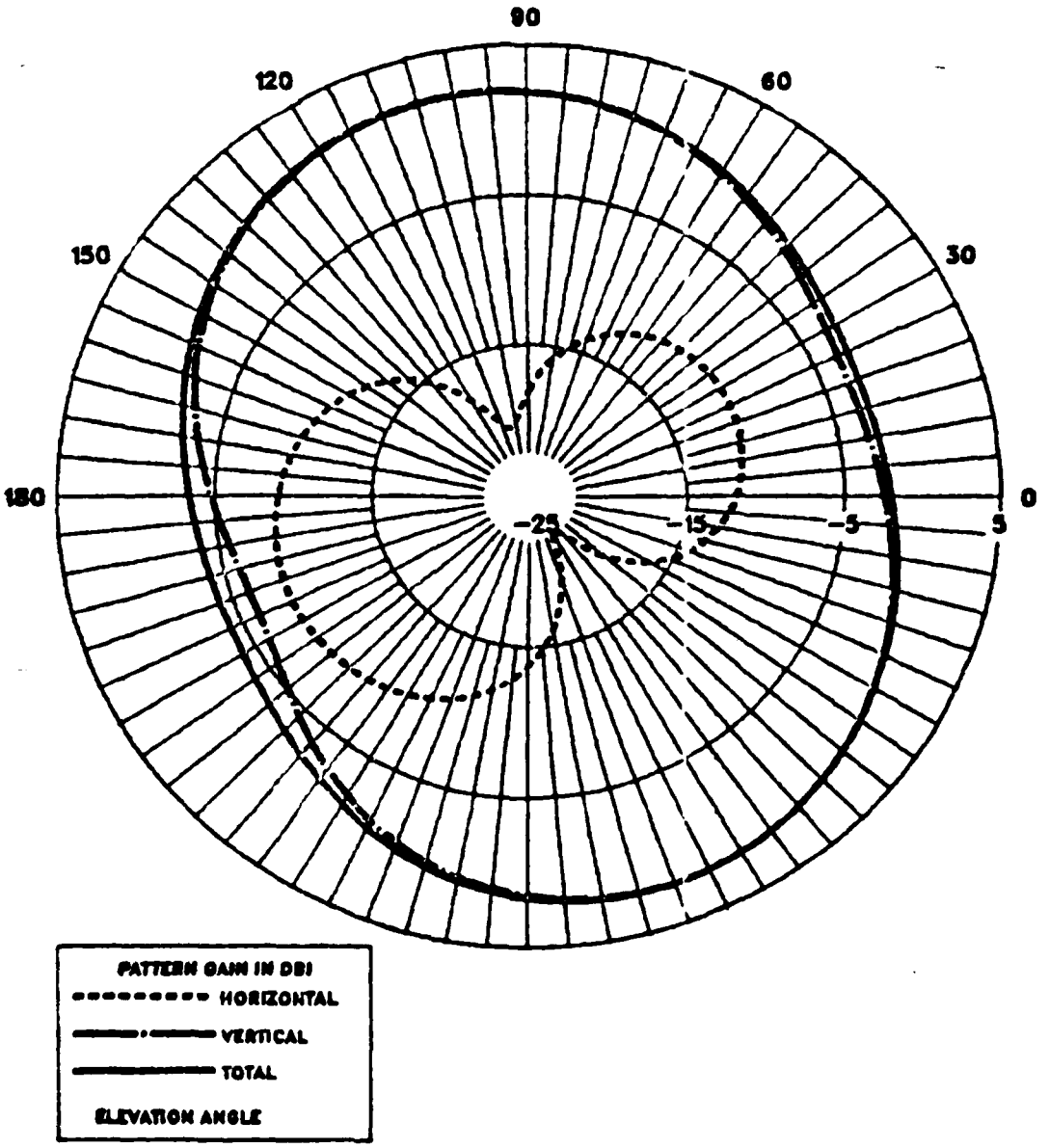

H60 IGUANA DATA RUN AT 7.645MHZ ON 8/21/87

NAVY 437R-2 ANT, FREE SPACE, VERT CUT, PHI=45

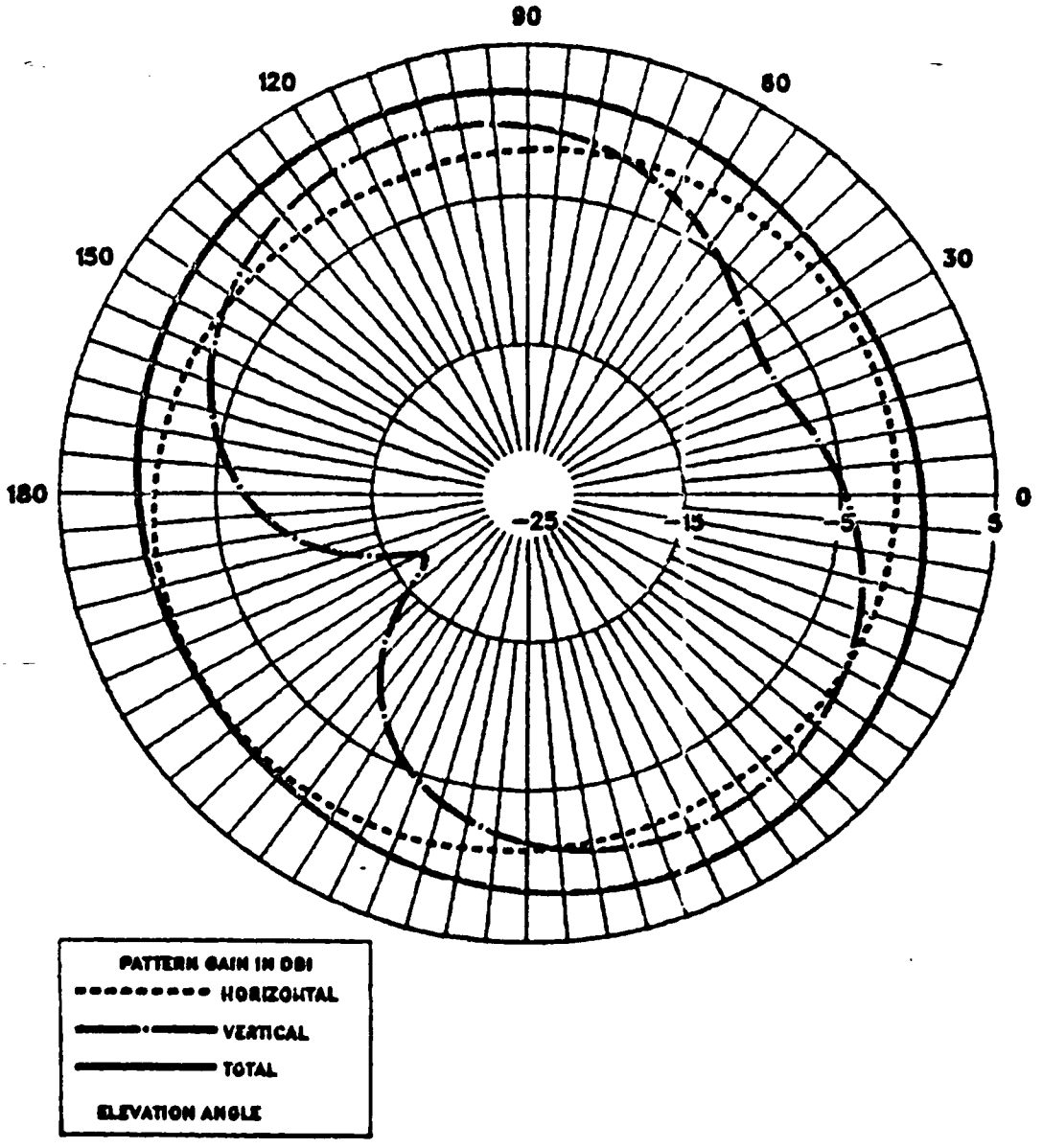

H60 IGUANA DATA RUN AT 7.645MHZ ON 8/21/87

CG 437R-2 ANT, FREE SPACE, HORIZ CUT, THETA=90

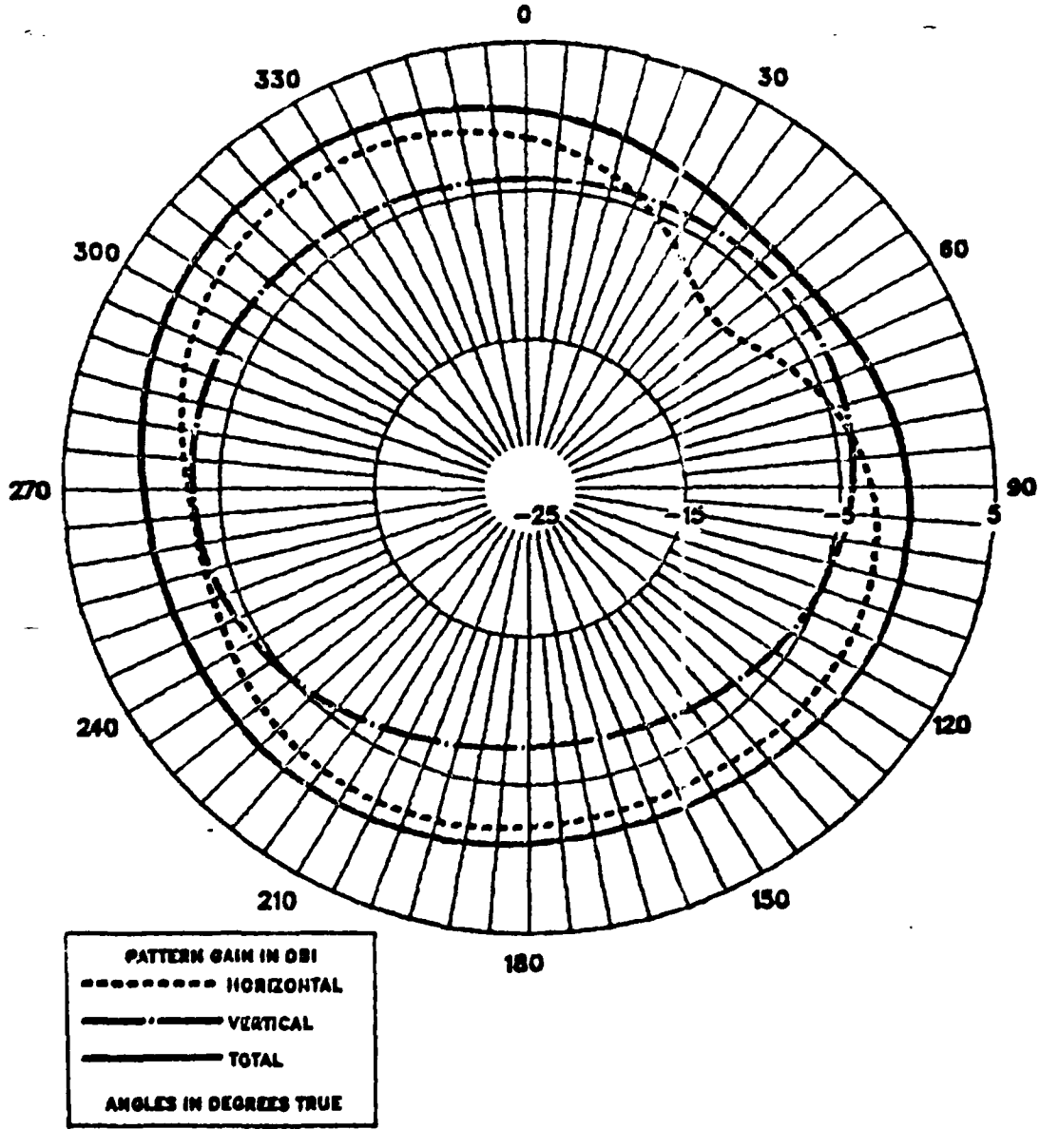

H60 IGUANA DATA RUN AT 7.645MHZ ON 8/21/87

CG 437R-2 ANT, FREE SPACE, HORIZ CUT, THETA=26

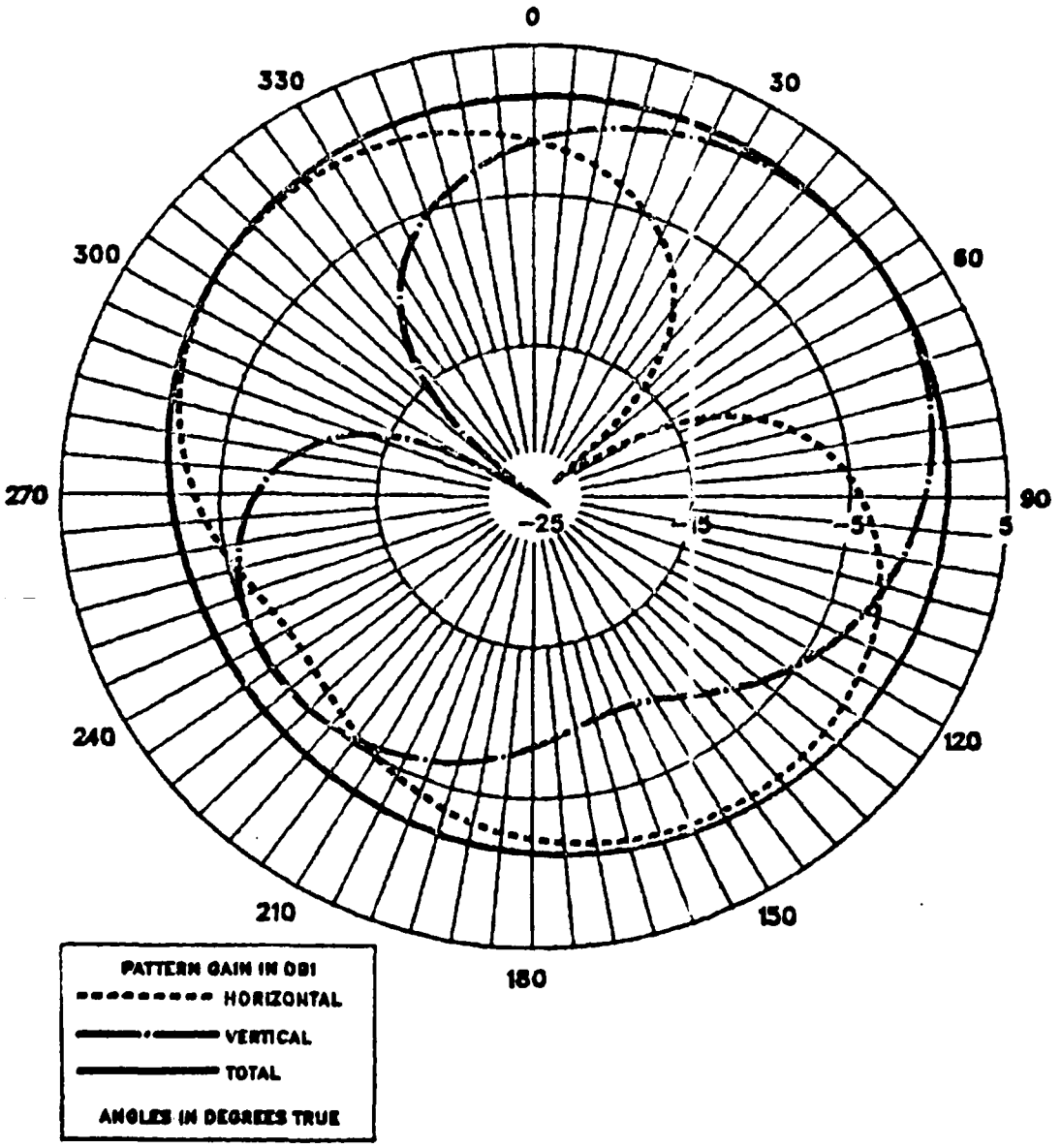

H60 IGUANA DATA RUN AT 7.645MHZ ON 8/21/87

CG 437R-2 ANT, FREE SPACE, VERT CUT, PHI=0

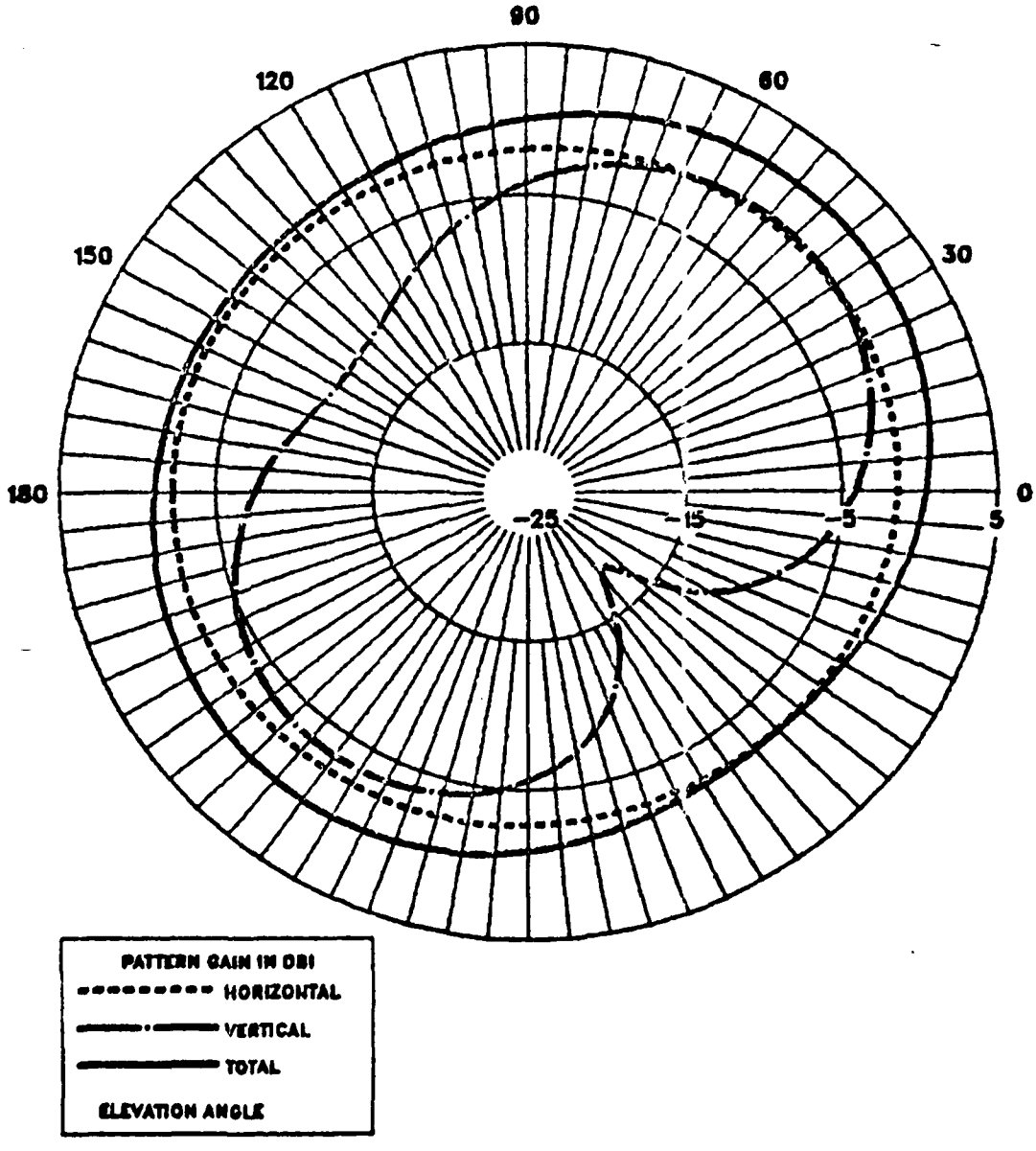

H60 IGUANA DATA RUN AT 7.645MHZ ON 8/21/87

CG 437R-2 ANT, FREE SPACE, VERT CUT, PHI=45

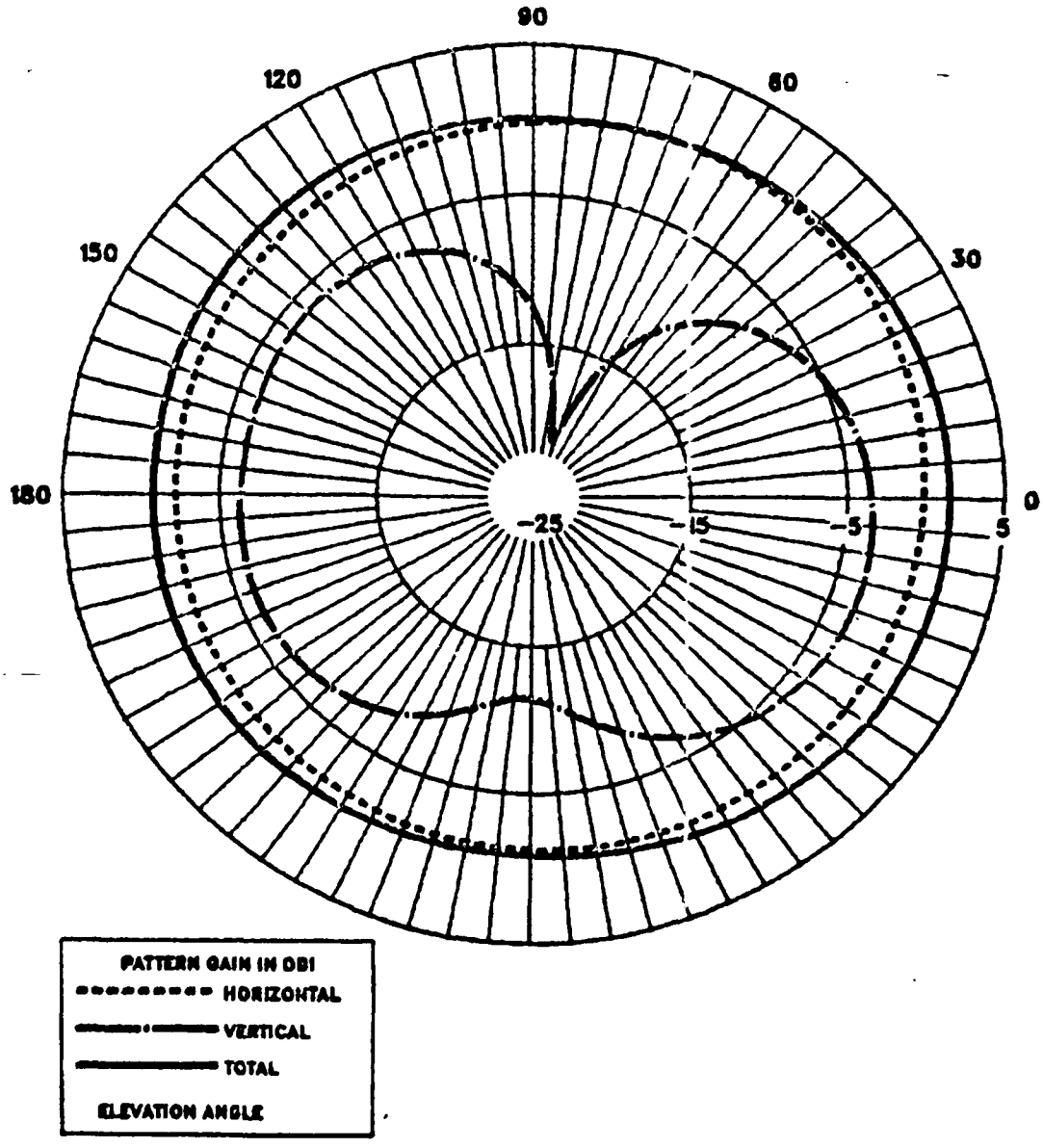

H60 IGUANA DATA RUN AT 7.645MHZ ON 8/21/87

ARMY-TYPE TUBE ANT, FREE SPACE, HORIZ CUT, THETA=90

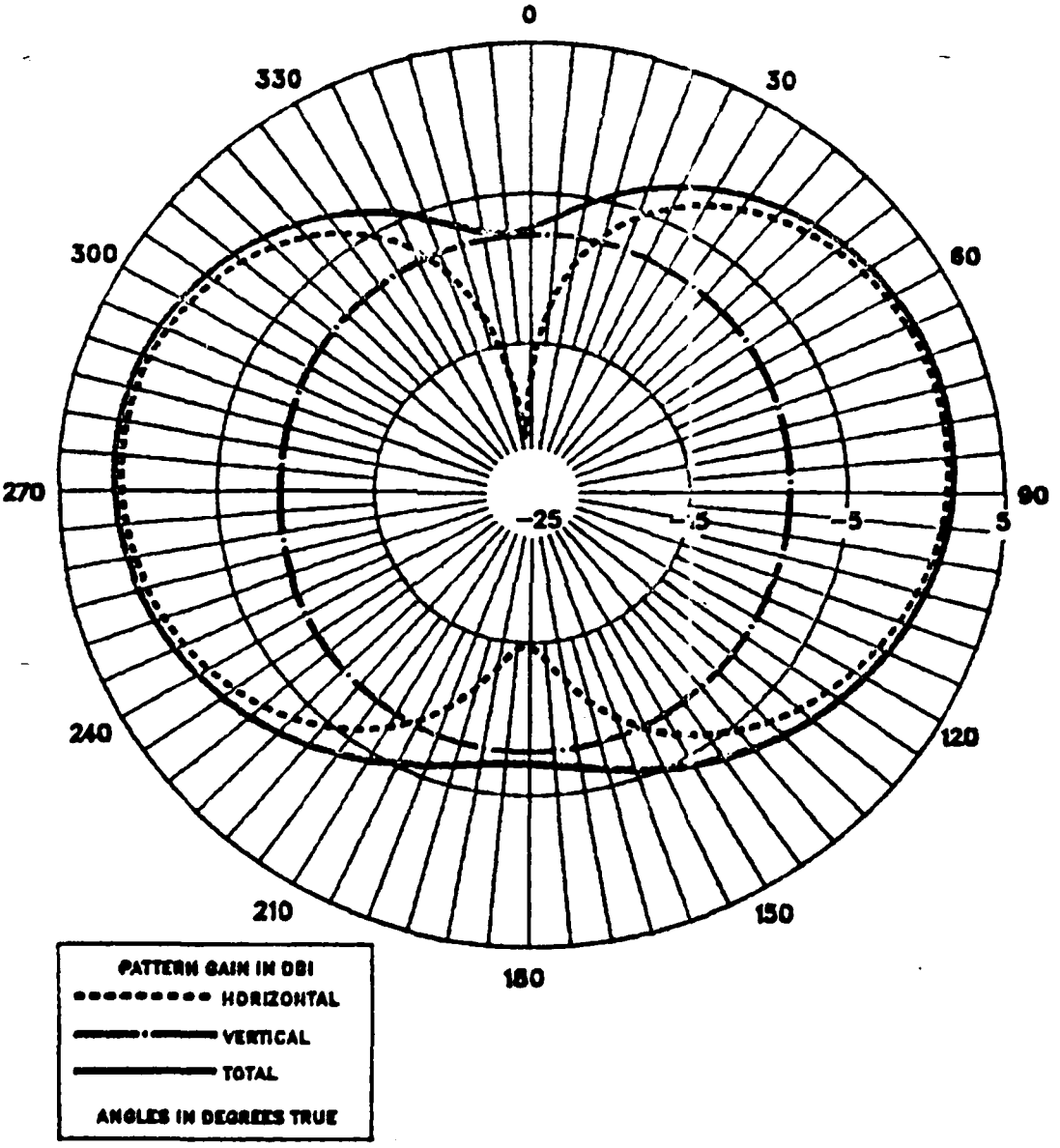

H60 IGUANA DATA RUN AT 7.645MHZ ON 8/21/87

ARMY–TYPE TUBE ANT, FREE SPACE, HORIZ CUT, THETA=26

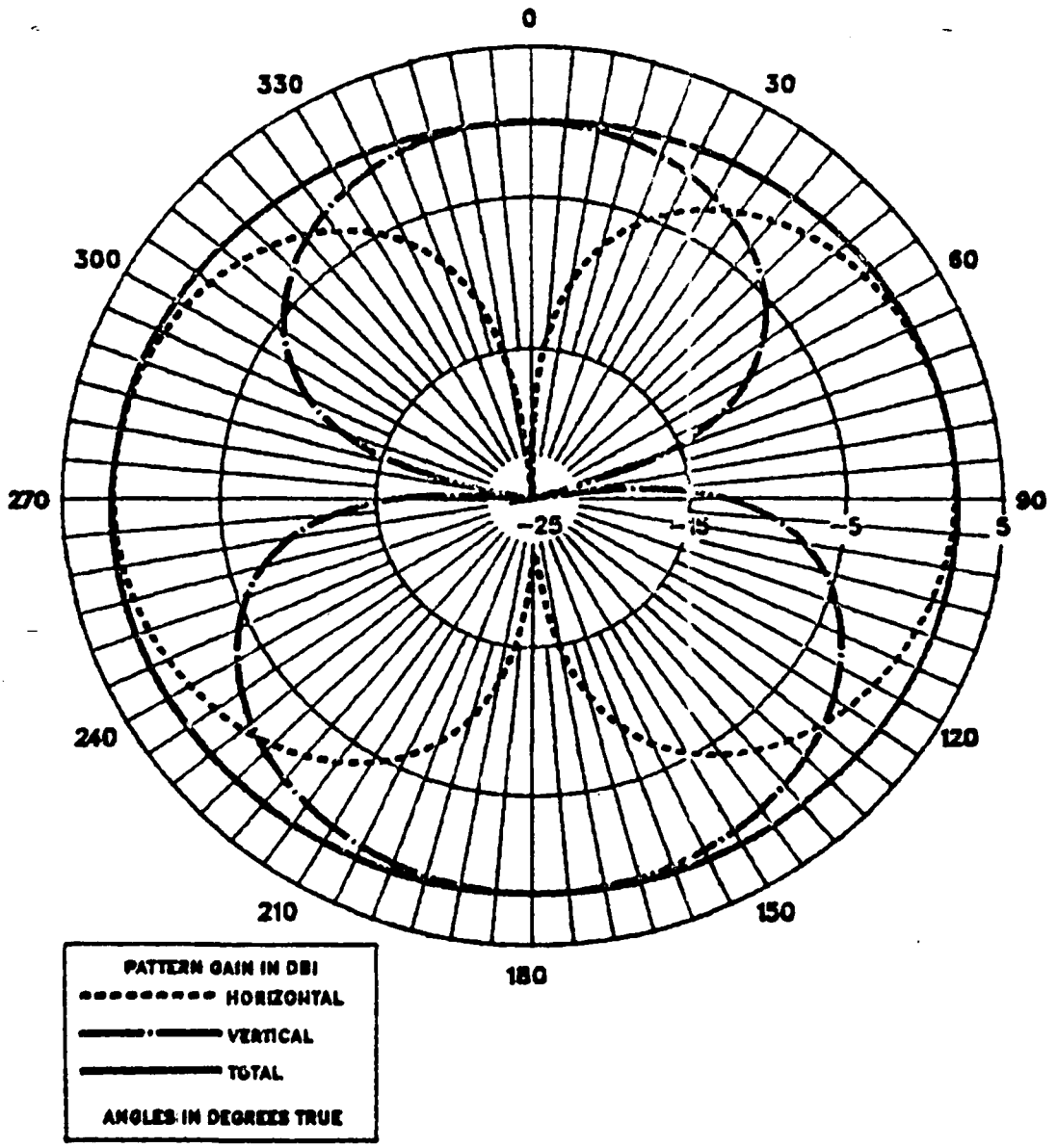

H60 IGUANA DATA RUN AT 7.645MHZ ON 8/21/87

ARMY-TYPE TUBE ANT, FREE SPACE, VERT CUT, PHI=0

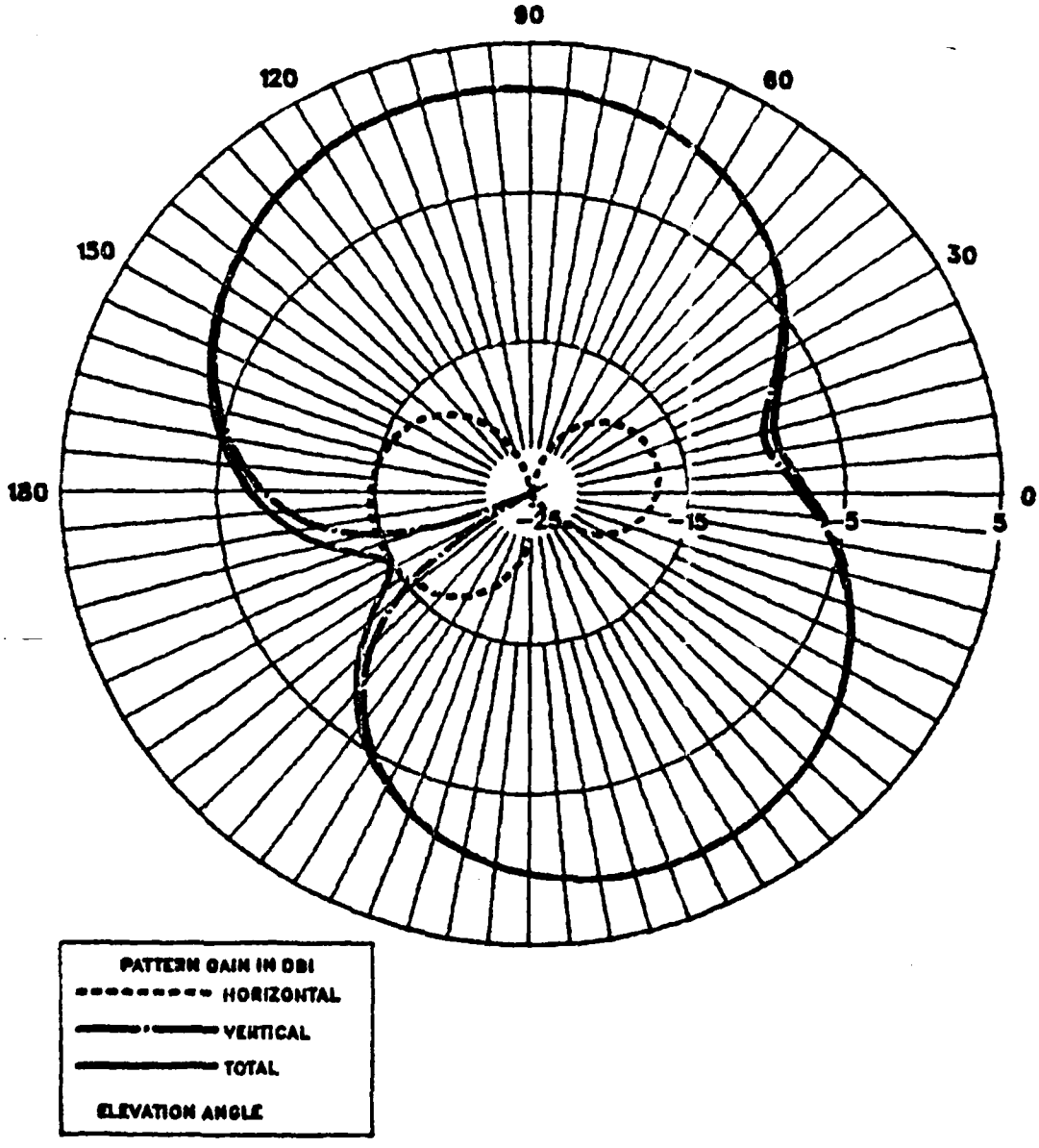

H60 IGUANA DATA RUN AT 7.645MHZ ON 8/21/87

ARMY-TYPE TUBE ANT, FREE SPACE, VERT CUT, PHI=45

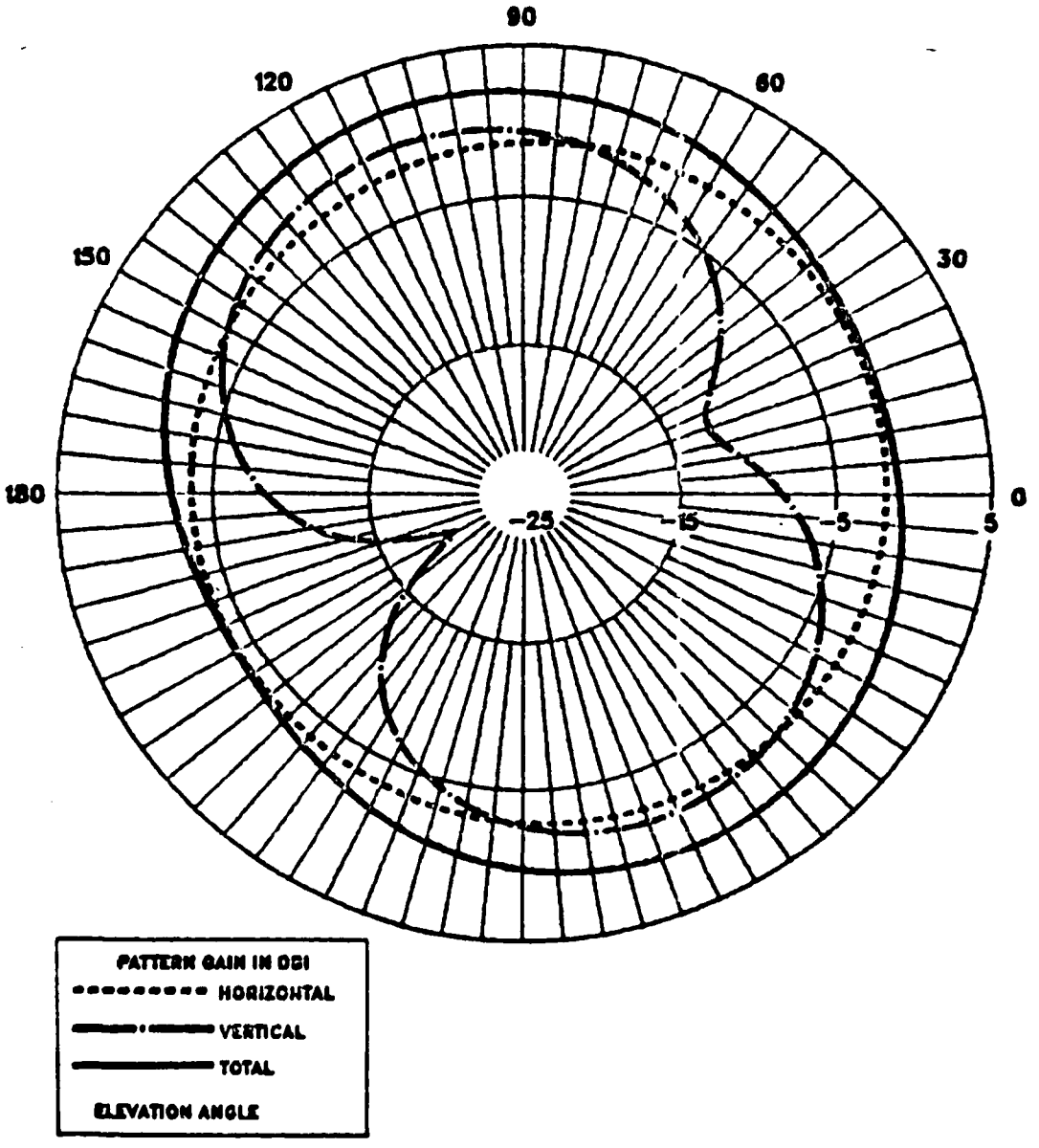

H60 IGUANA DATA RUN AT 8.984MHZ ON 8/24/87

LONG-WIRE ANT, FREE SPACE, HORIZ CUT, THETA=90

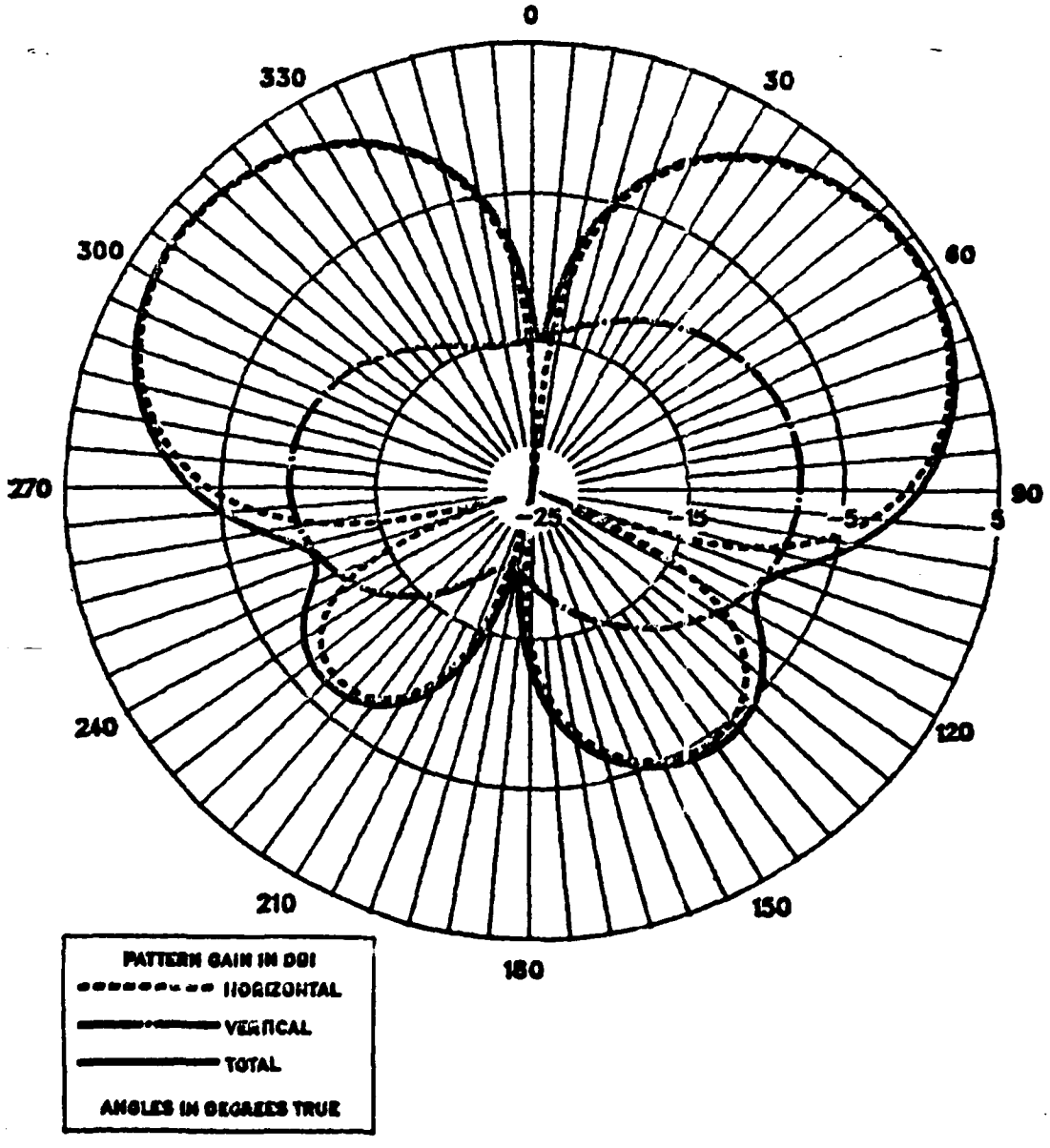

H60 IGUANA DATA RUN AT 8.984MHZ ON 8/24/87

LONG-WIRE ANT, FREE SPACE, HORIZ CUT, THETA=26

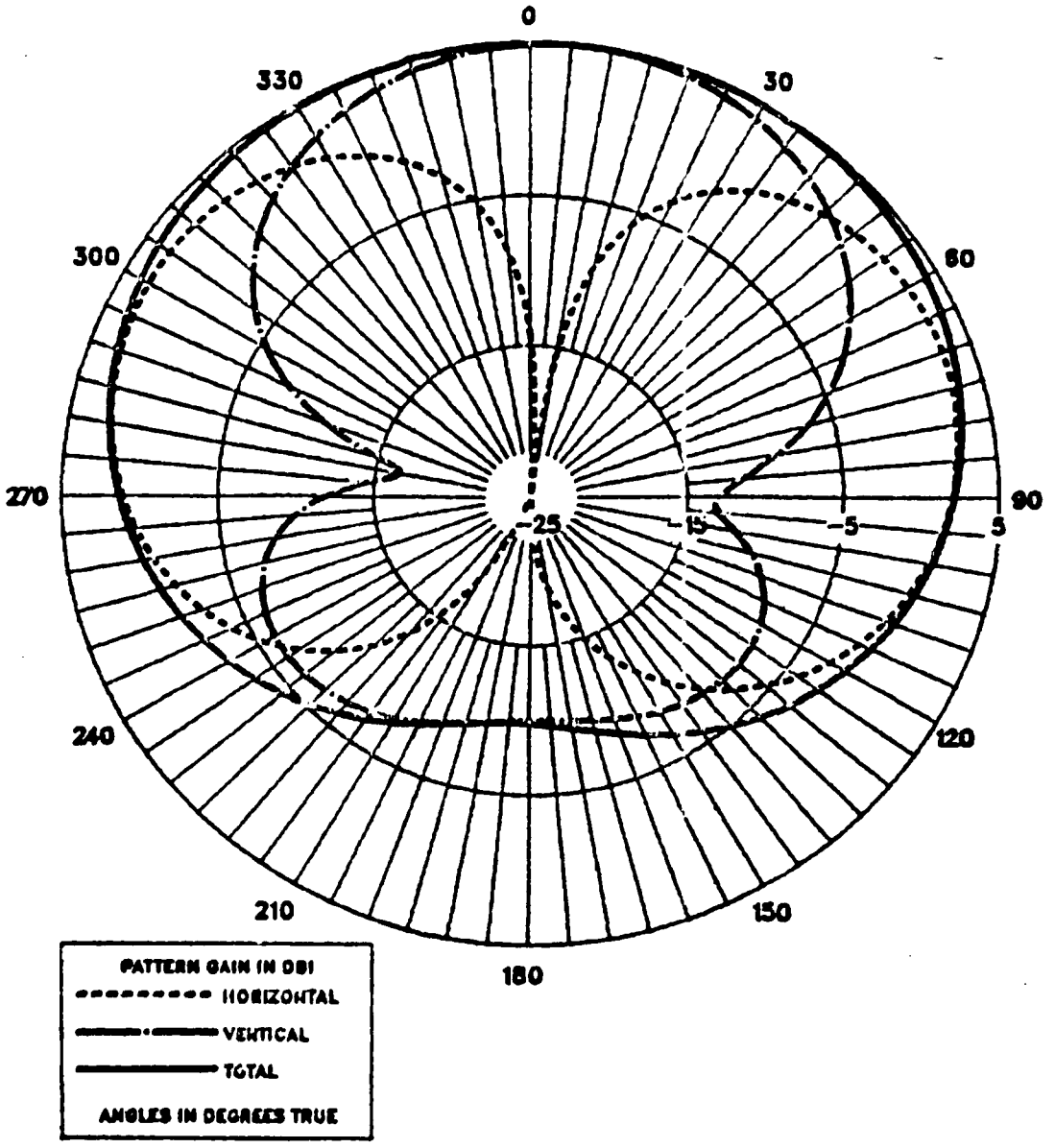

H60 IGUANA DATA RUN AT 8.984MHZ ON 8/24/87

LONG-WIRE ANT, FREE SPACE, VERT CUT, PHI=0

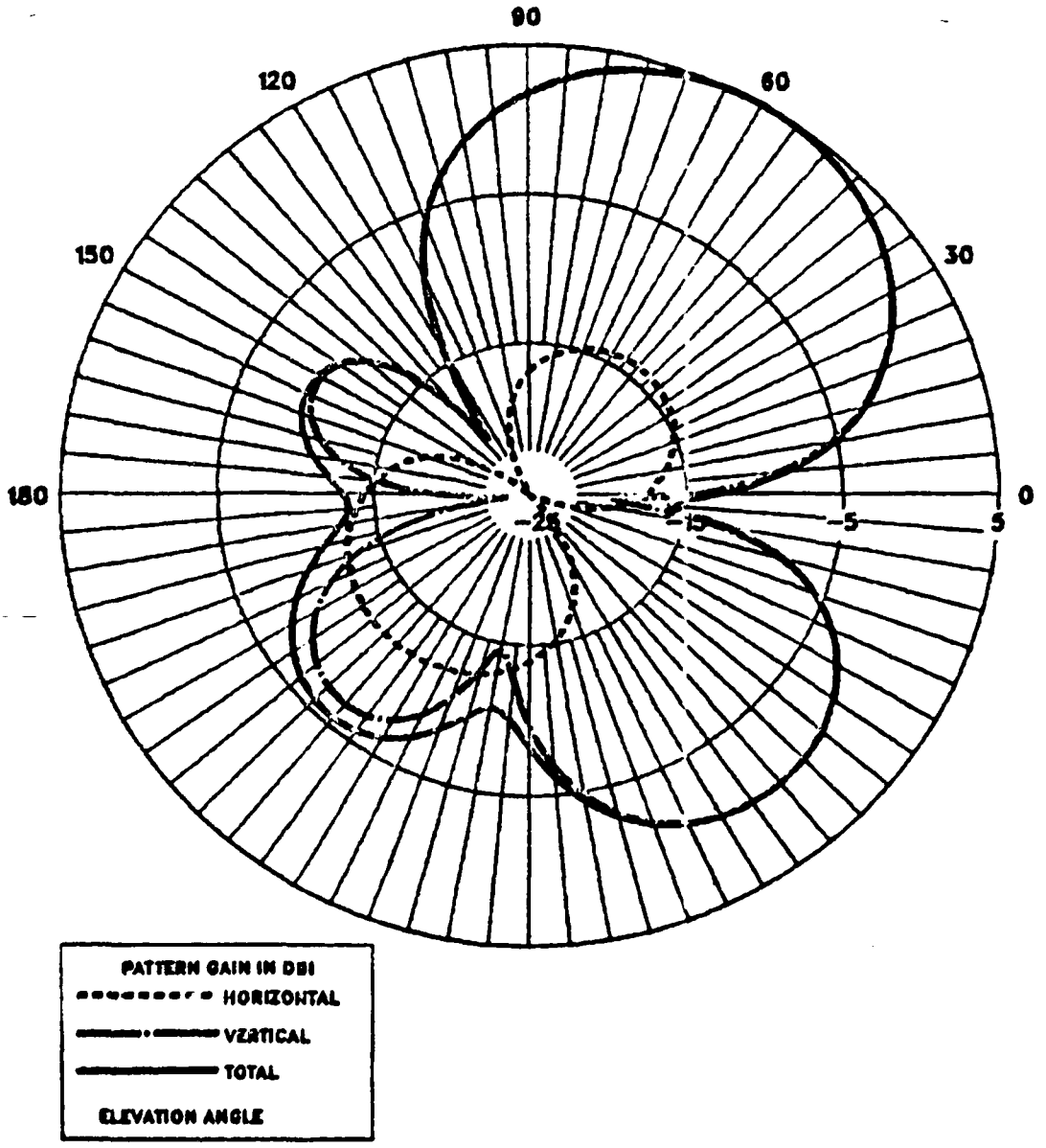

H60 IGUANA DATA RUN AT 8.984MHZ ON 8/24/87

LONG-WIRE ANT, FREE SPACE, VERT CUT, PHI=45

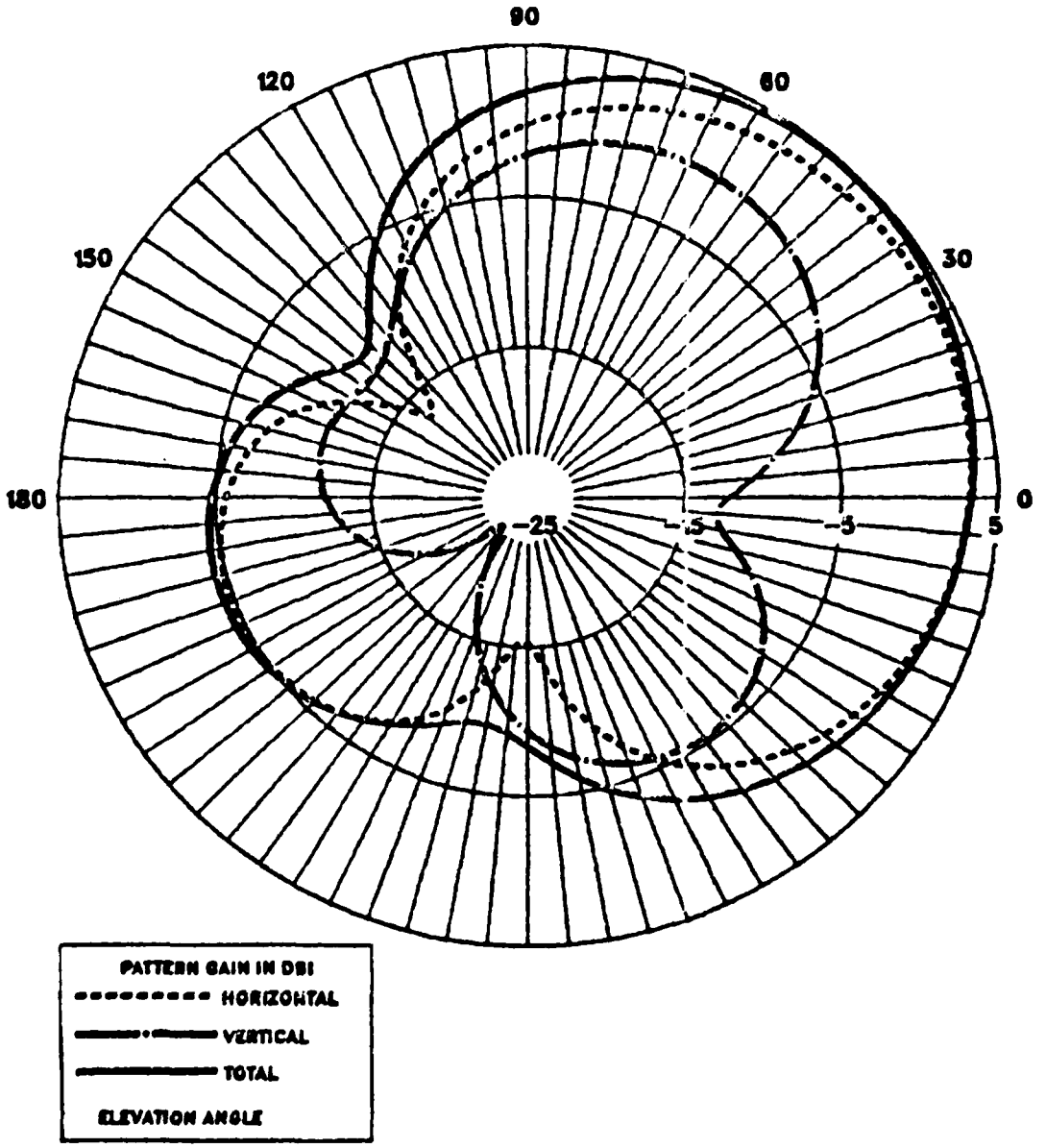

H60 IGUANA DATA RUN AT 8.984MHZ ON 8/24/87

NAVY 437R-2 ANT, FREE SPACE, HORIZ CUT, THETA=90

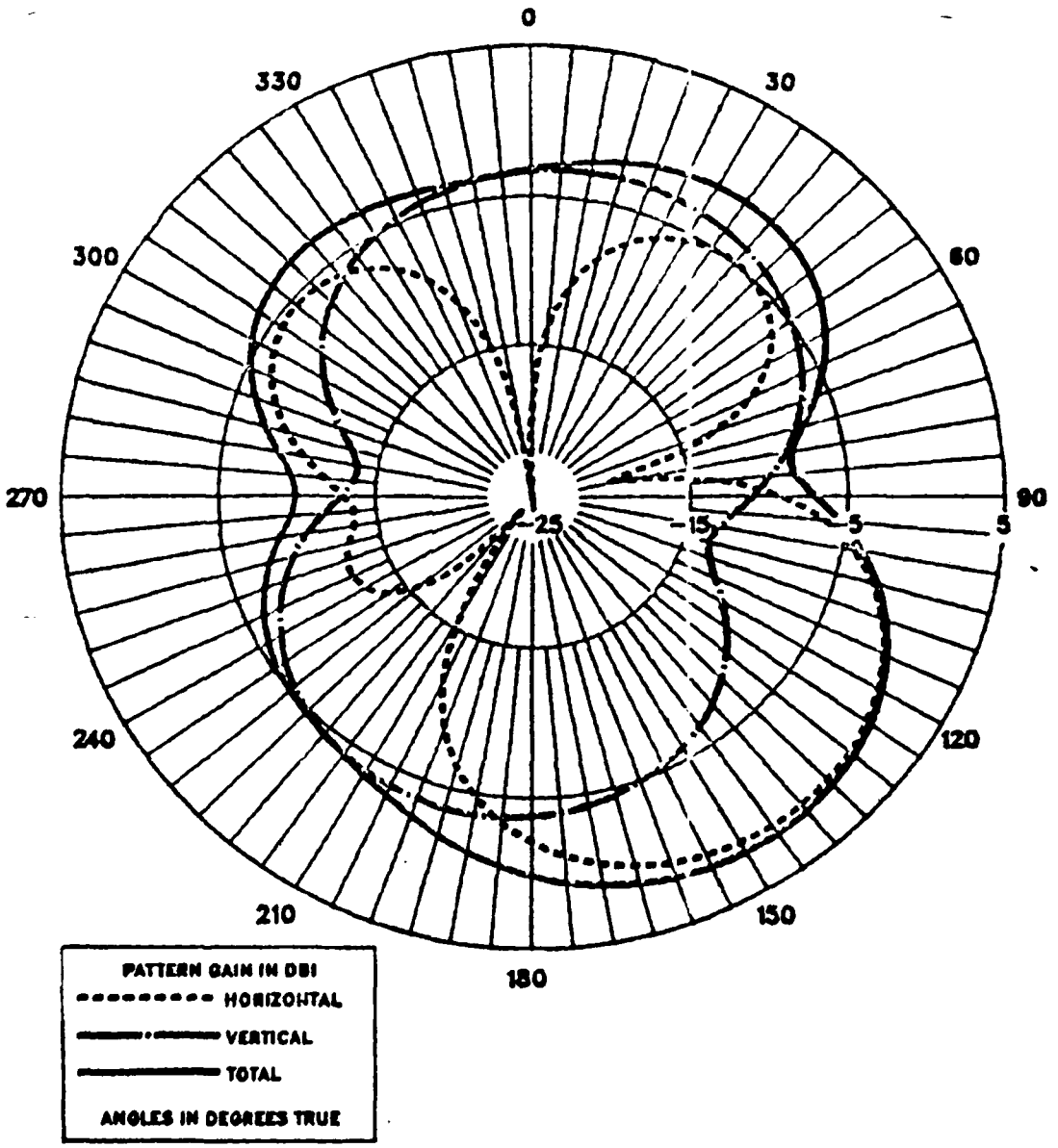

H60 IGUANA DATA RUN AT 8.984MHZ ON 8/24/87

NAVY 437R-2 ANT, FREE SPACE, HORIZ CUT, THETA=26

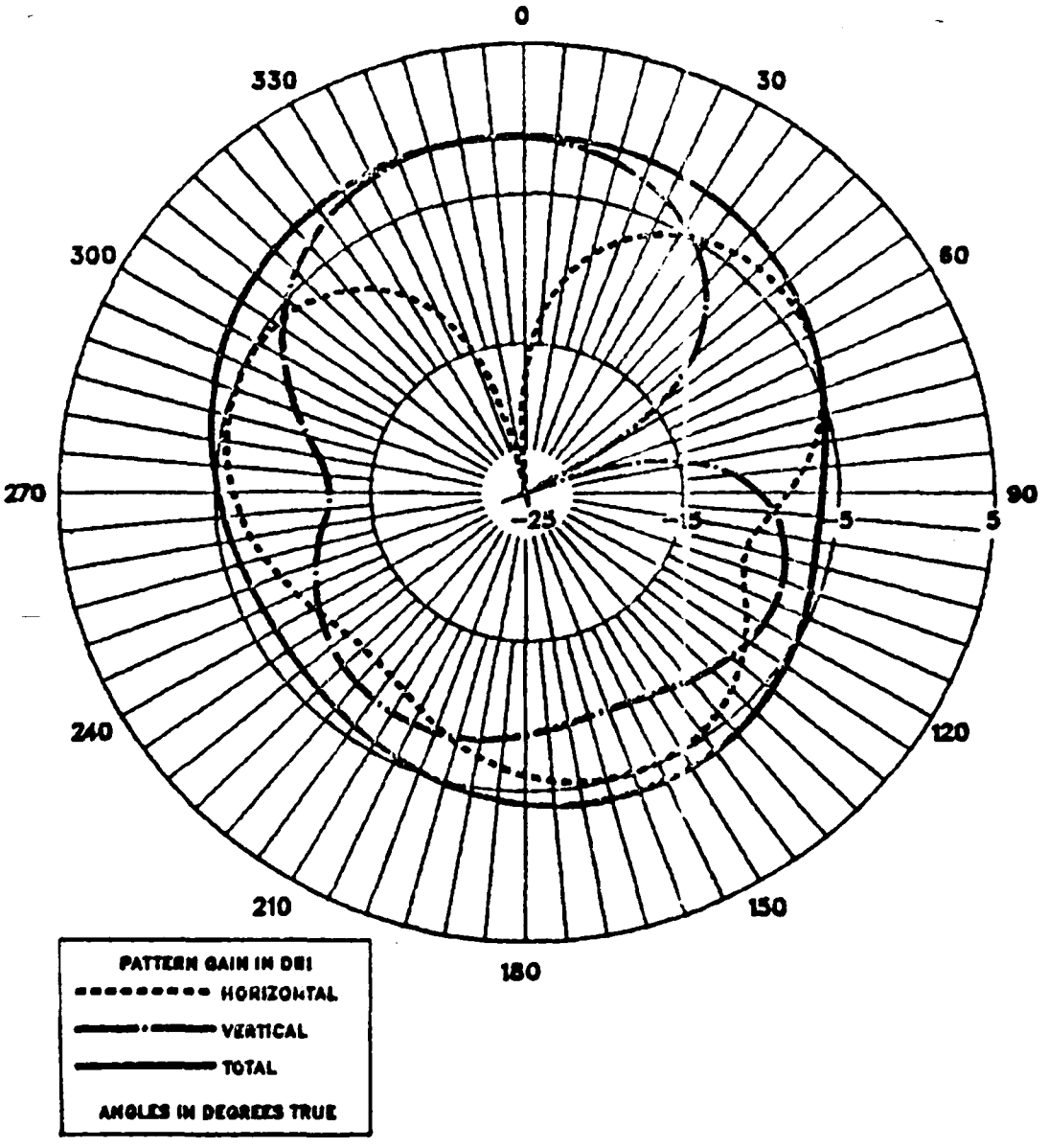

H60 IGUANA DATA RUN AT 8.984MHZ ON 8/24/87

NAVY 437R-2 ANT, FREE SPACE, VERT CUT, PHI=0

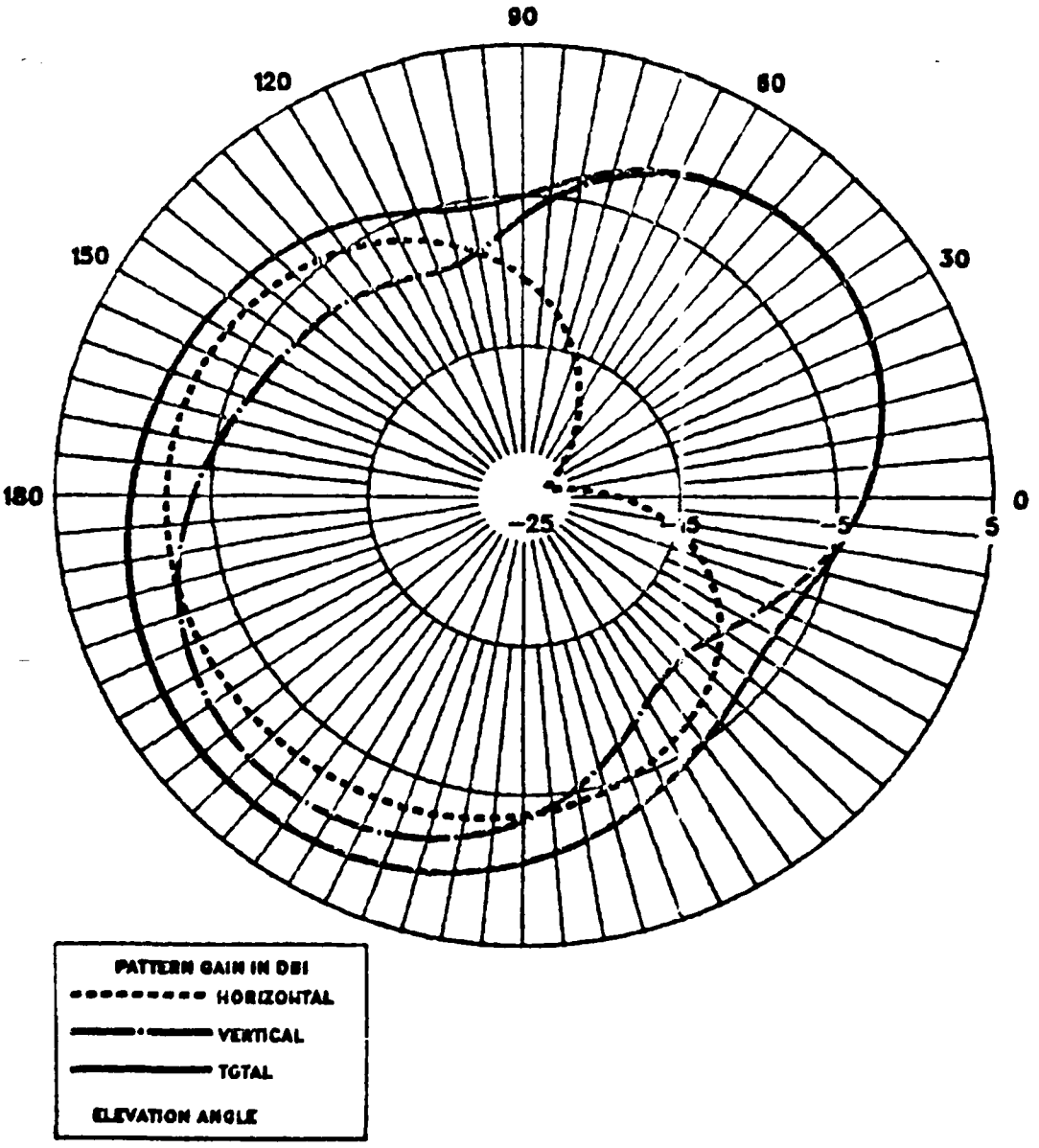

H60 IGUANA DATA RUN AT 8.984MHZ ON 8/24/87

NAVY 437R-2 ANT, FREE SPACE, VERT CUT, PHI=45

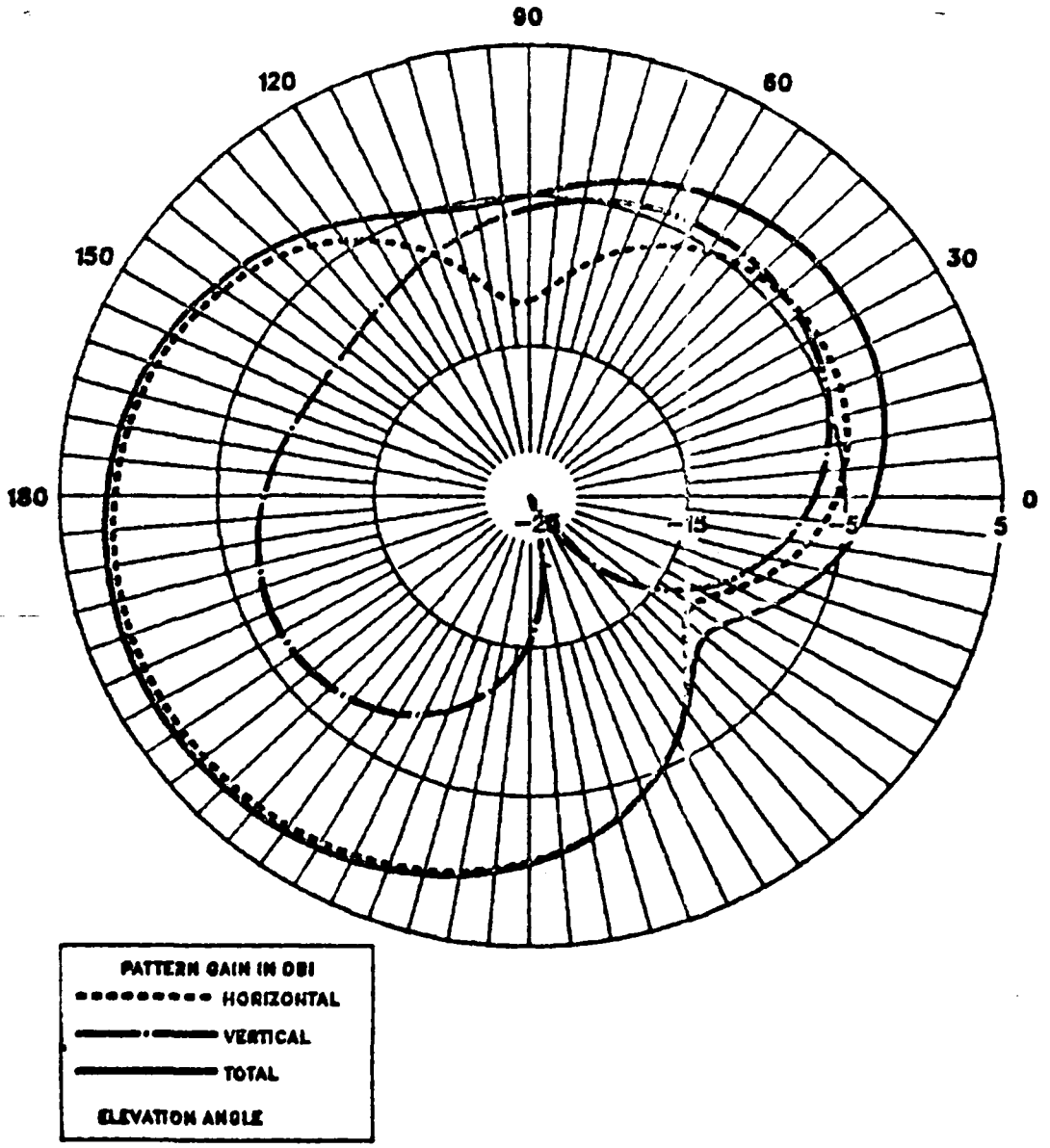

H60 IGUANA DATA RUN AT 8.984MHZ ON 8/24/87

CG 437R-2 ANT, FREE SPACE, HORIZ CUT, THETA=90

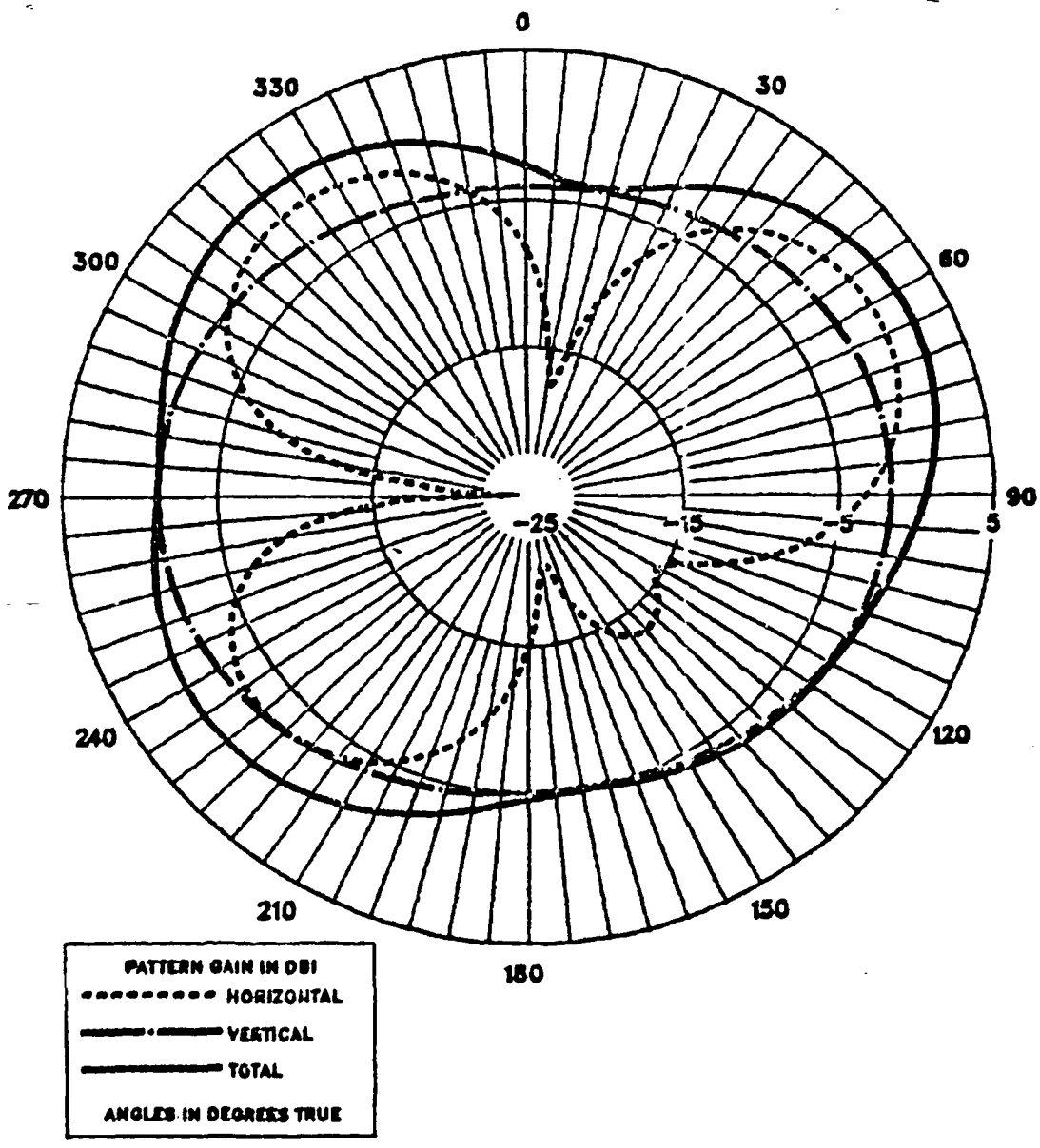

H60 IGUANA DATA RUN AT 8.984MHZ ON 8/24/87

CG 437R-2 ANT, FREE SPACE, HORIZ CUT, THETA=26

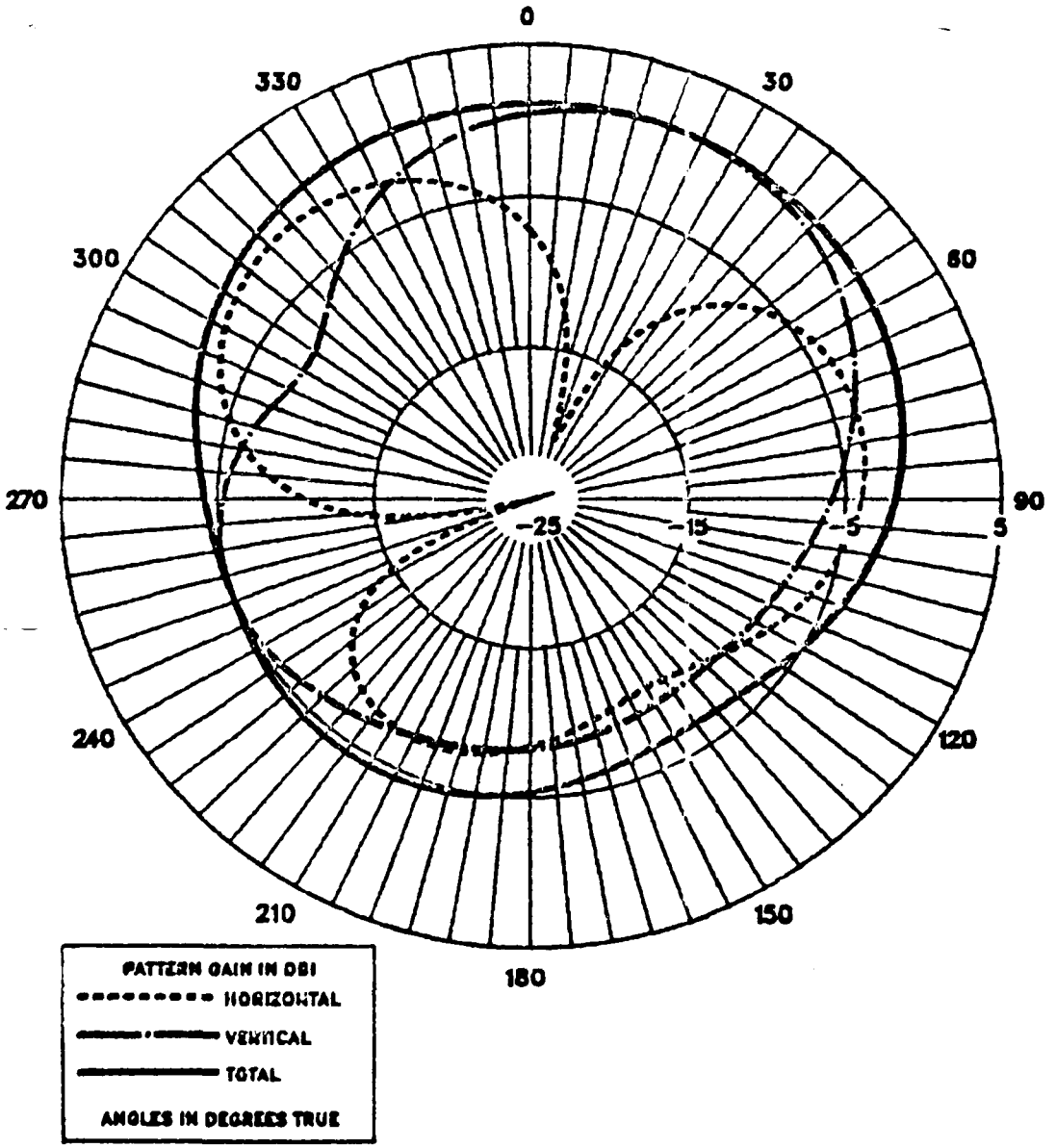

H60 IGUANA DATA RUN AT 8.984MHZ ON 8/24/87

CG 437R-2 ANT, FREE SPACE, VERT CUT, PHI=0

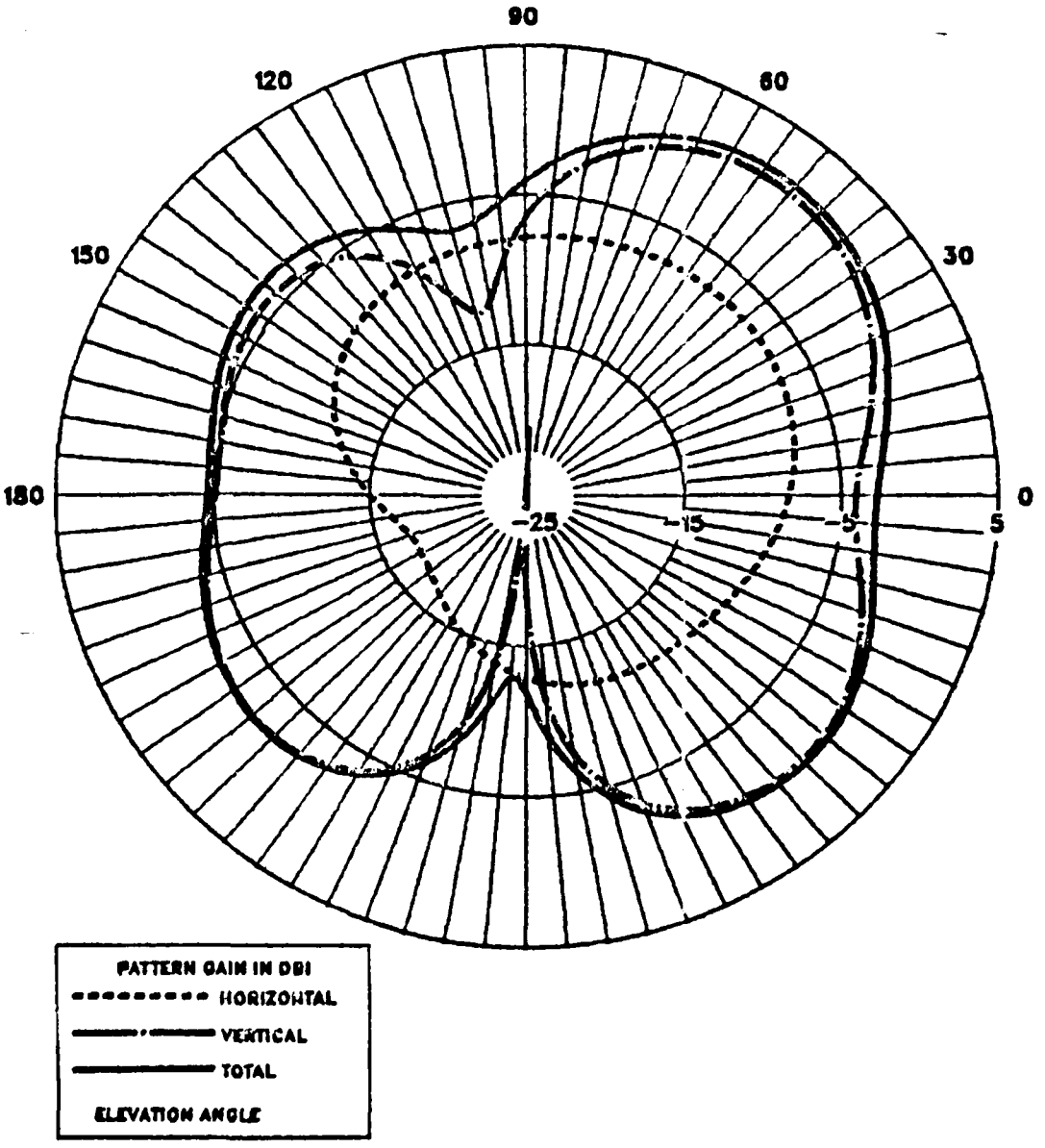

H60 IGUANA DATA RUN AT 8.984MHZ ON 8/24/87

CG 4[illegible]R-2 ANT, FREE SPACE, VERT CUT, PHI=45

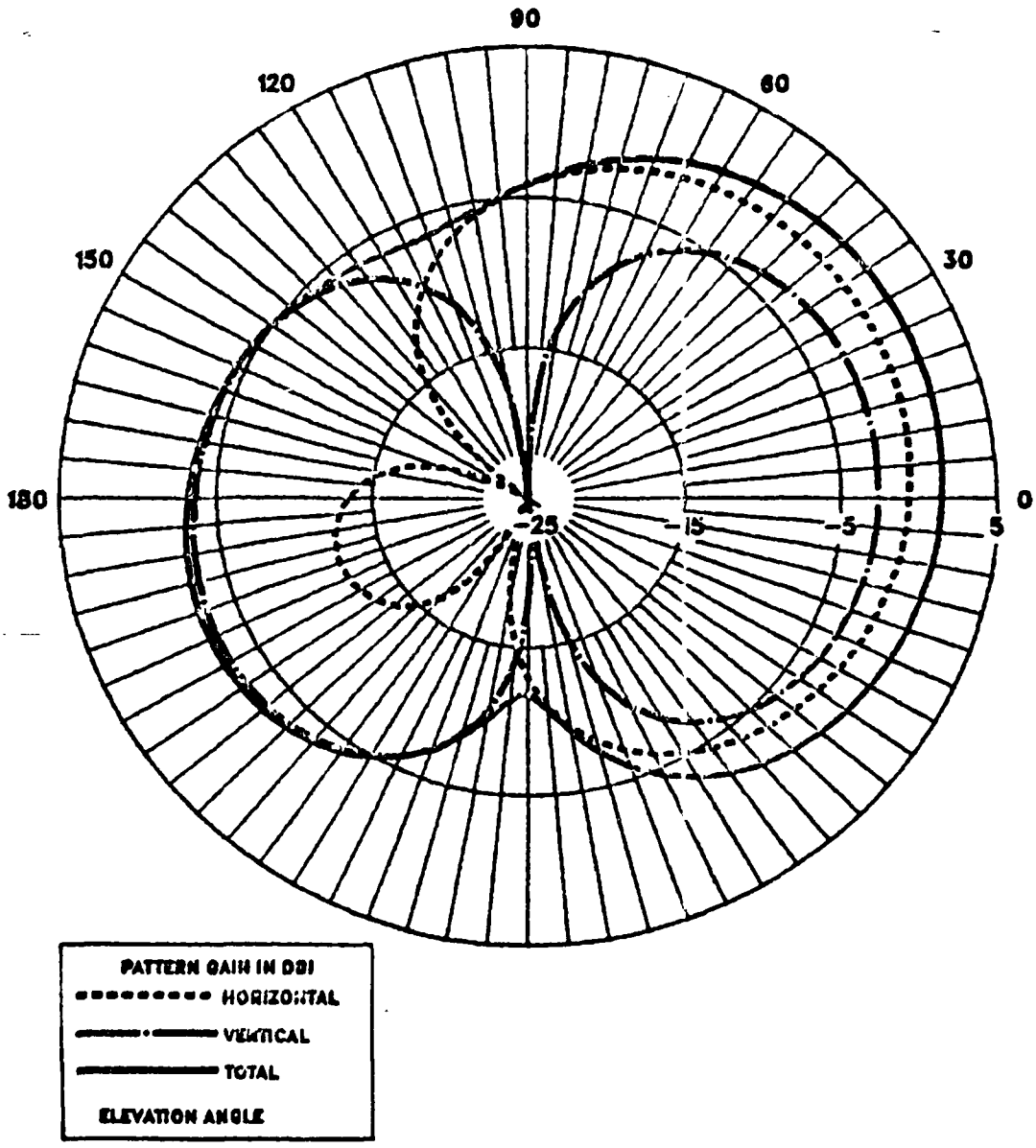

H60 IGUANA DATA RUN AT 8.984MHZ ON 8/24/87

ARMY-TYPE TUBE ANT, FREE SPACE, HORIZ CUT, THETA=90

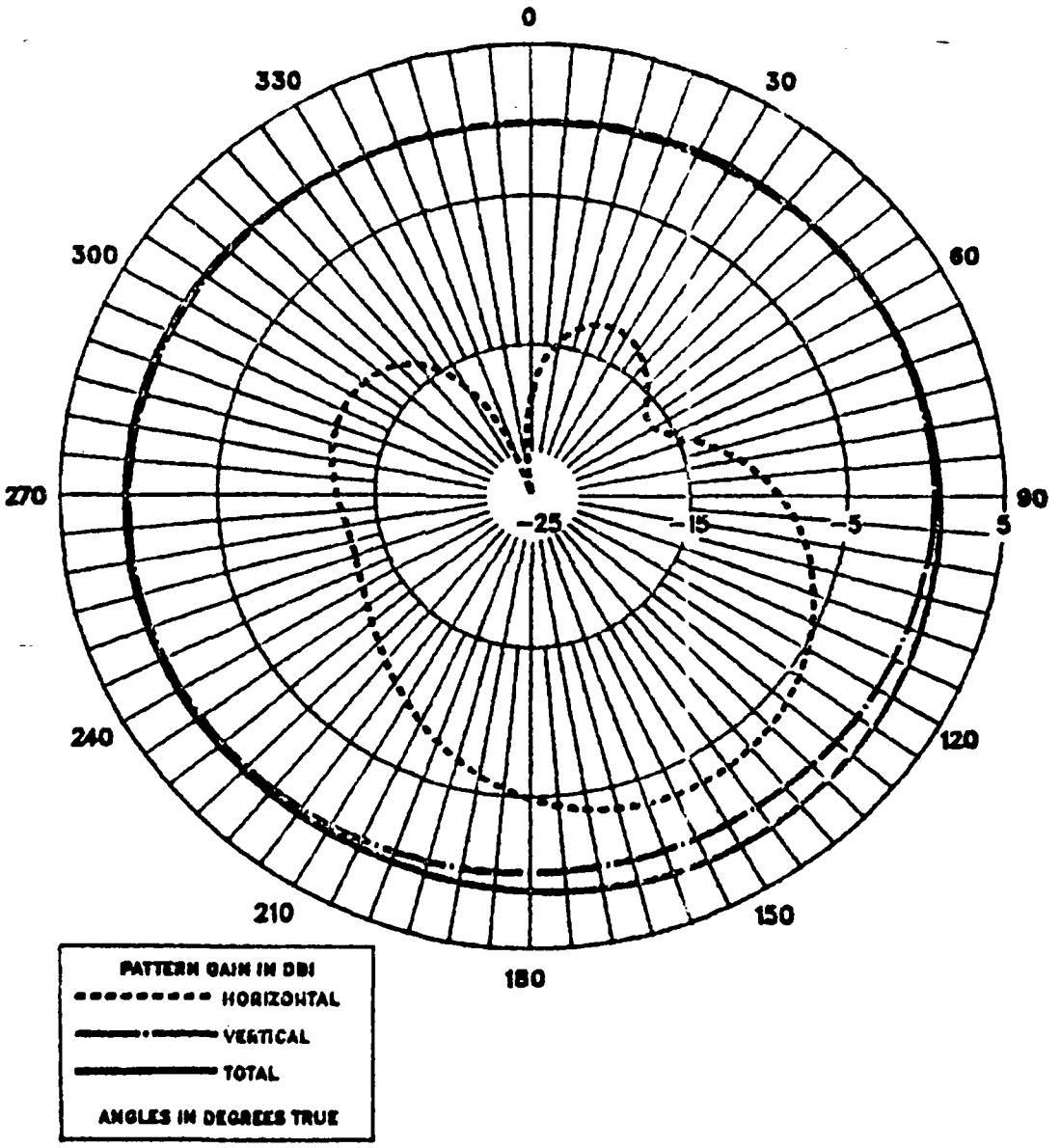

H60 IGUANA DATA RUN AT 8.984MHZ ON 8/24/87

ARMY–TYPE TUBE ANT, FREE SPACE, HORIZ CUT, THETA=26

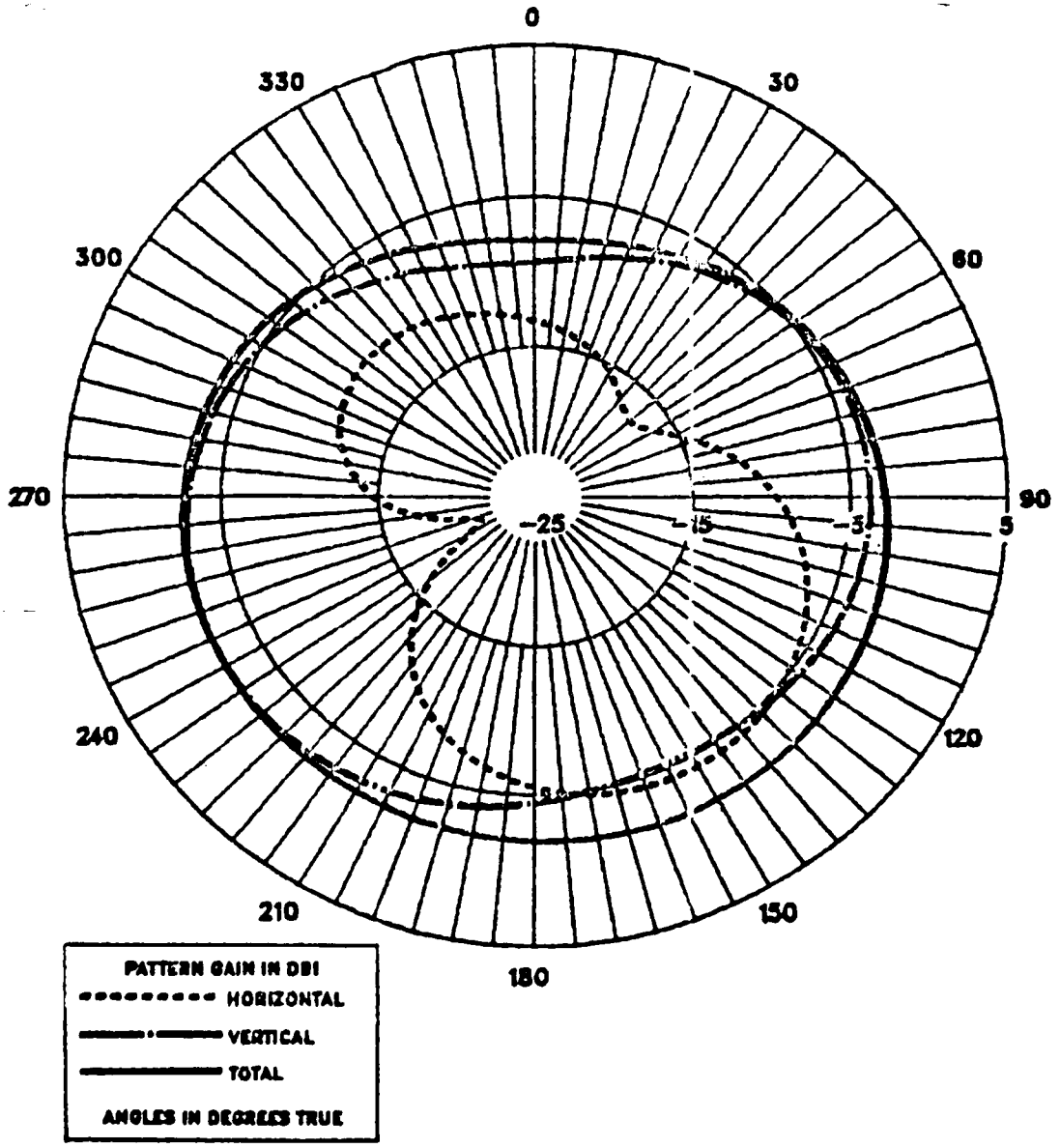

H60 IGUANA DATA RUN AT 8.984MHZ ON 8/24/87

ARMY–TYPE TUBE ANT, FREE SPACE, VERT CUT, PHI=0

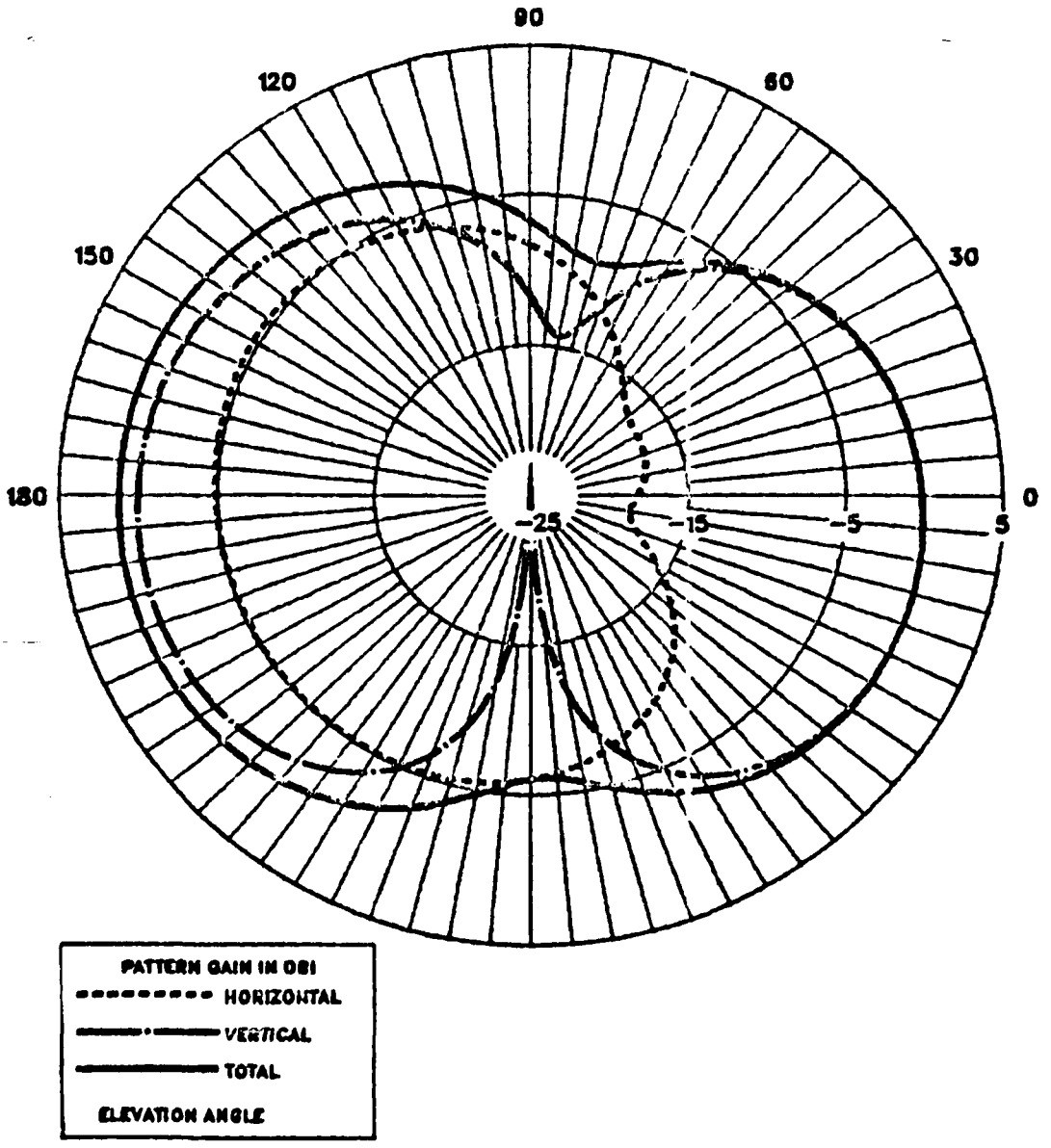

H65 IGUANA DATA RUN AT 8.984MHZ ON 8/24/87

ARMY-TYPE TUBE ANT, FREE SPACE, VERT CUT, PHI=45

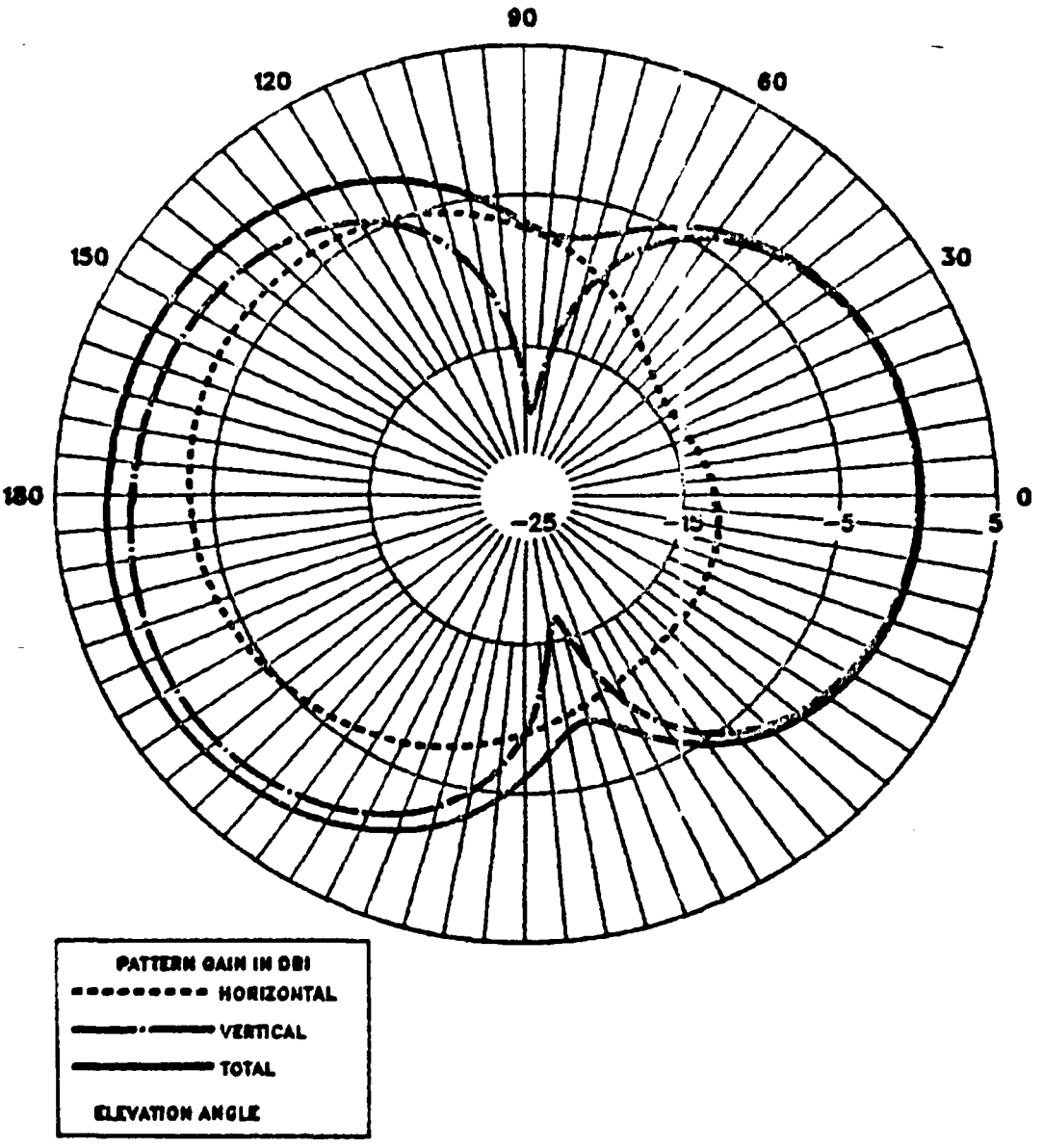

H60 IGUANA DATA RUN AT 13.974 MHZ ON 9/11/87

LONG-WIRE ANT, FREE SPACE, HORIZ CUT, THETA=90

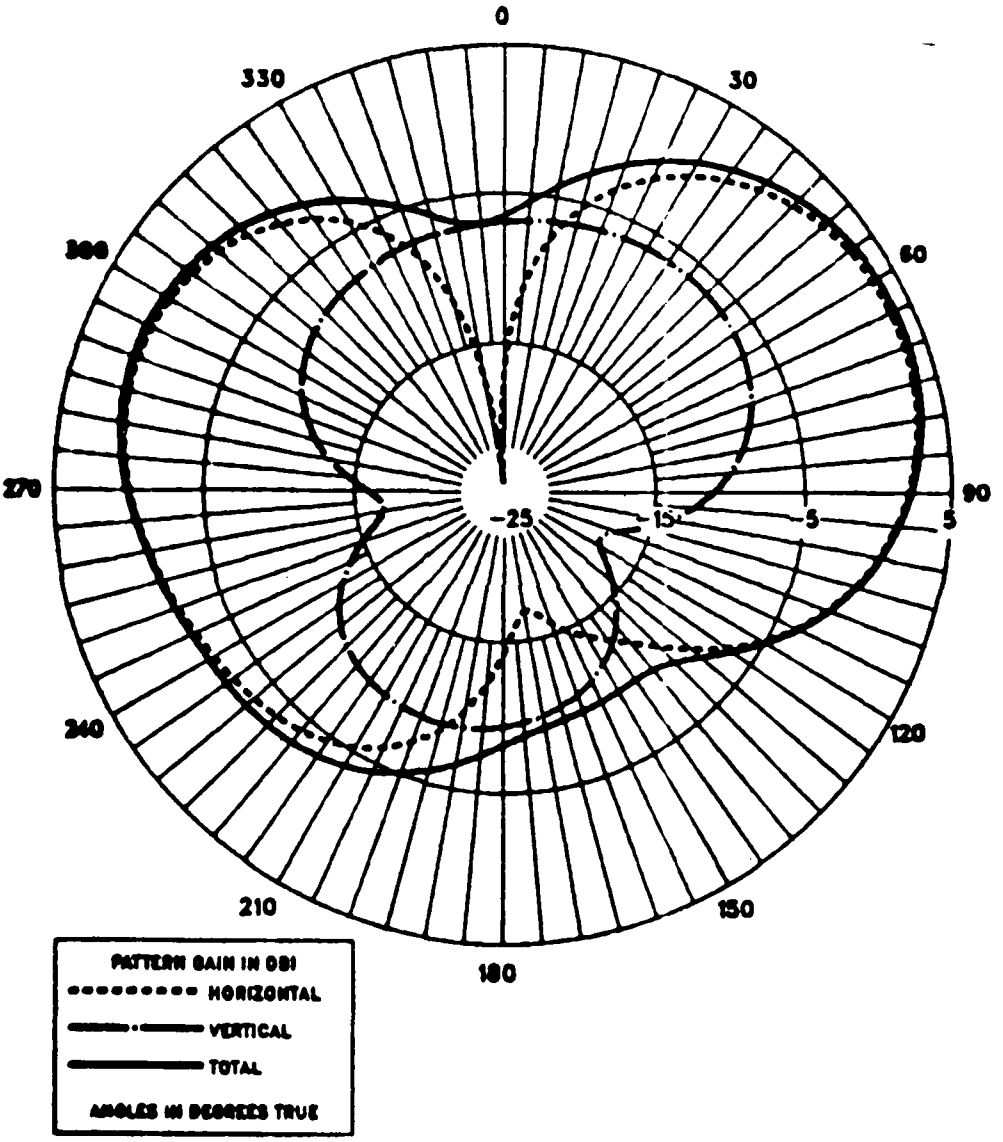

H60 IGUANA DATA RUN AT 13.974 MHZ ON 9/11/87

LONG-WIRE ANT, FREE SPACE, HORIZ CUT, THETA=26

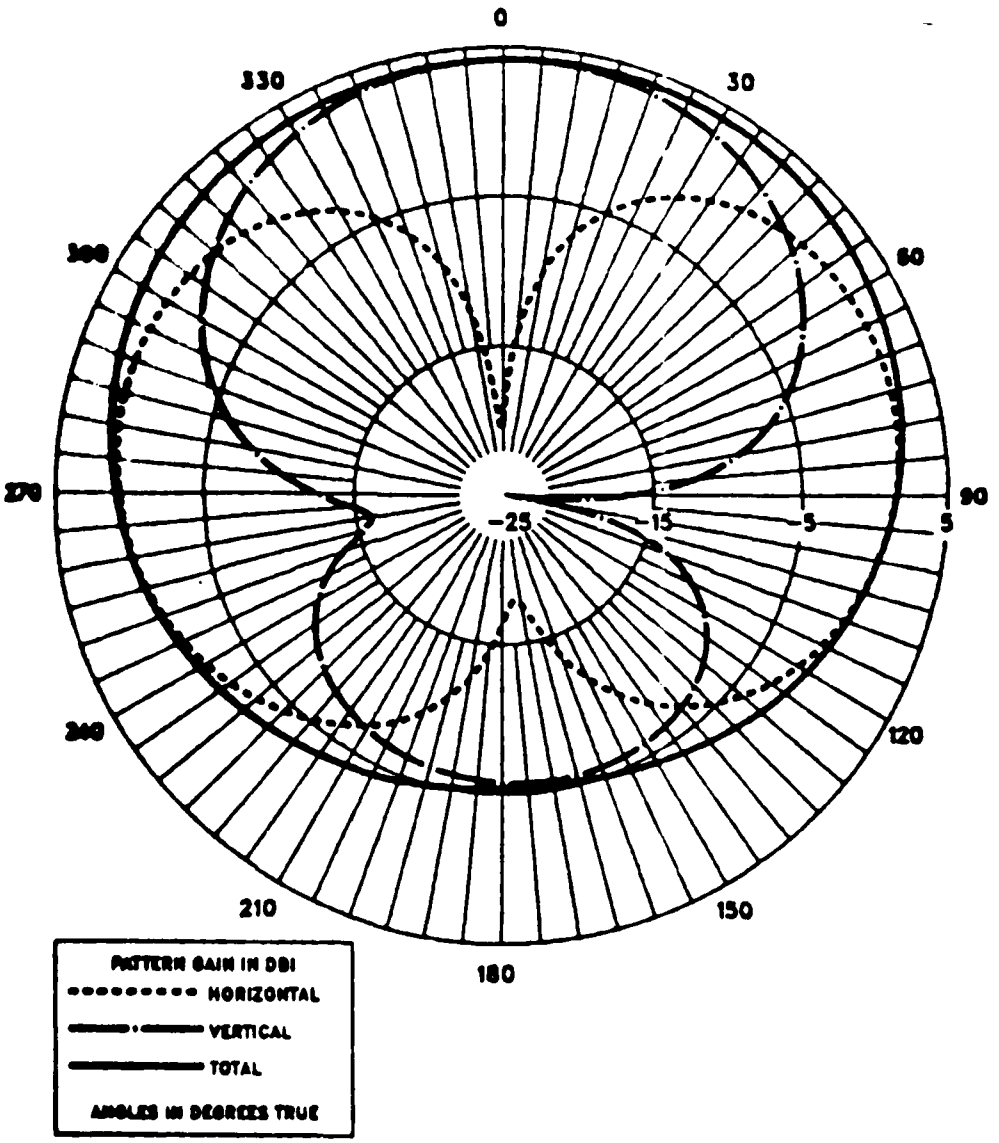

H60 IGUANA DATA RUN AT 13.974 MHZ ON 9/11/87

LONG-WIRE ANT, FREE SPACE, VERT CUT, PHI=0

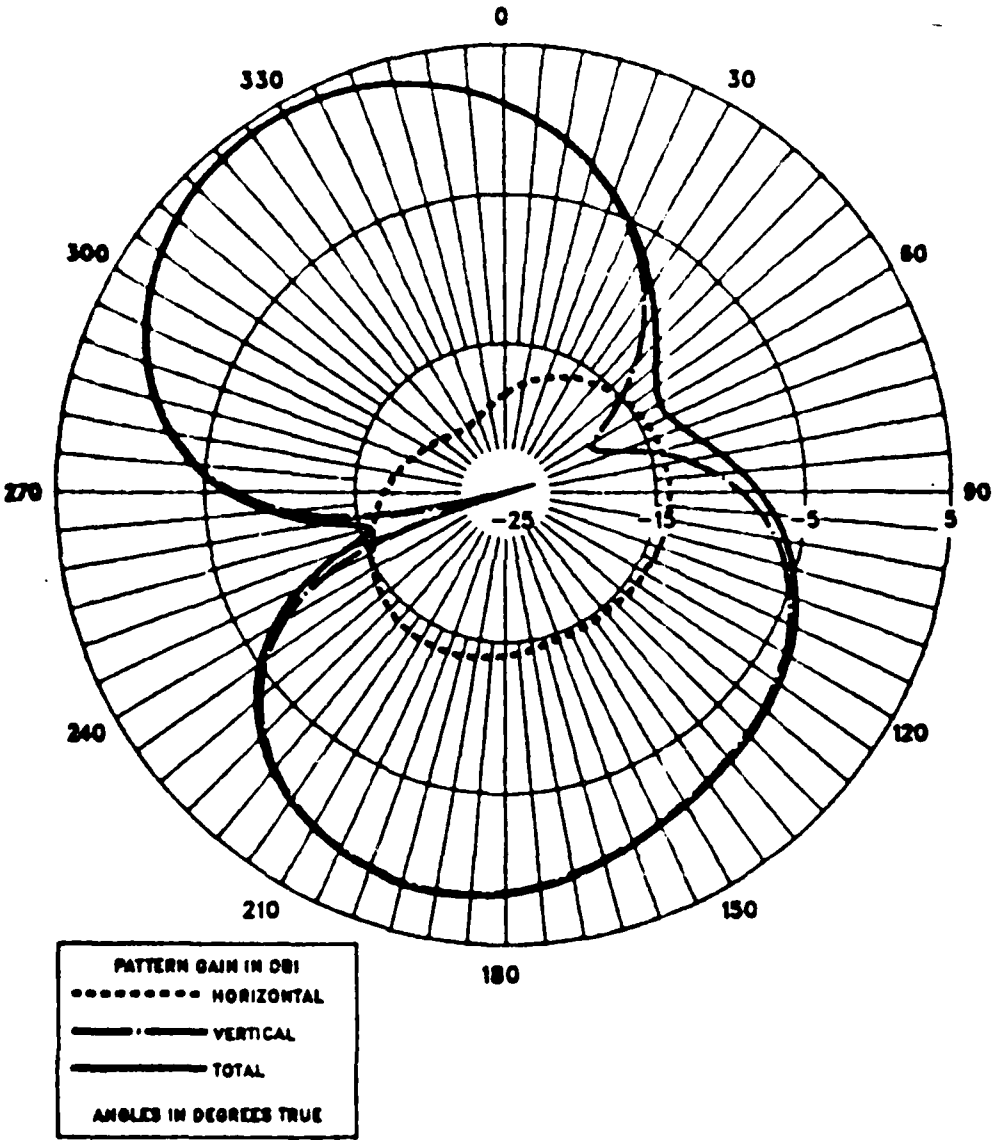

H60 IGUANA DATA RUN AT 13.974 MHZ ON 9/11/87

LONG-WIRE ANT, FREE SPACE, VERT CUT, PHI=45

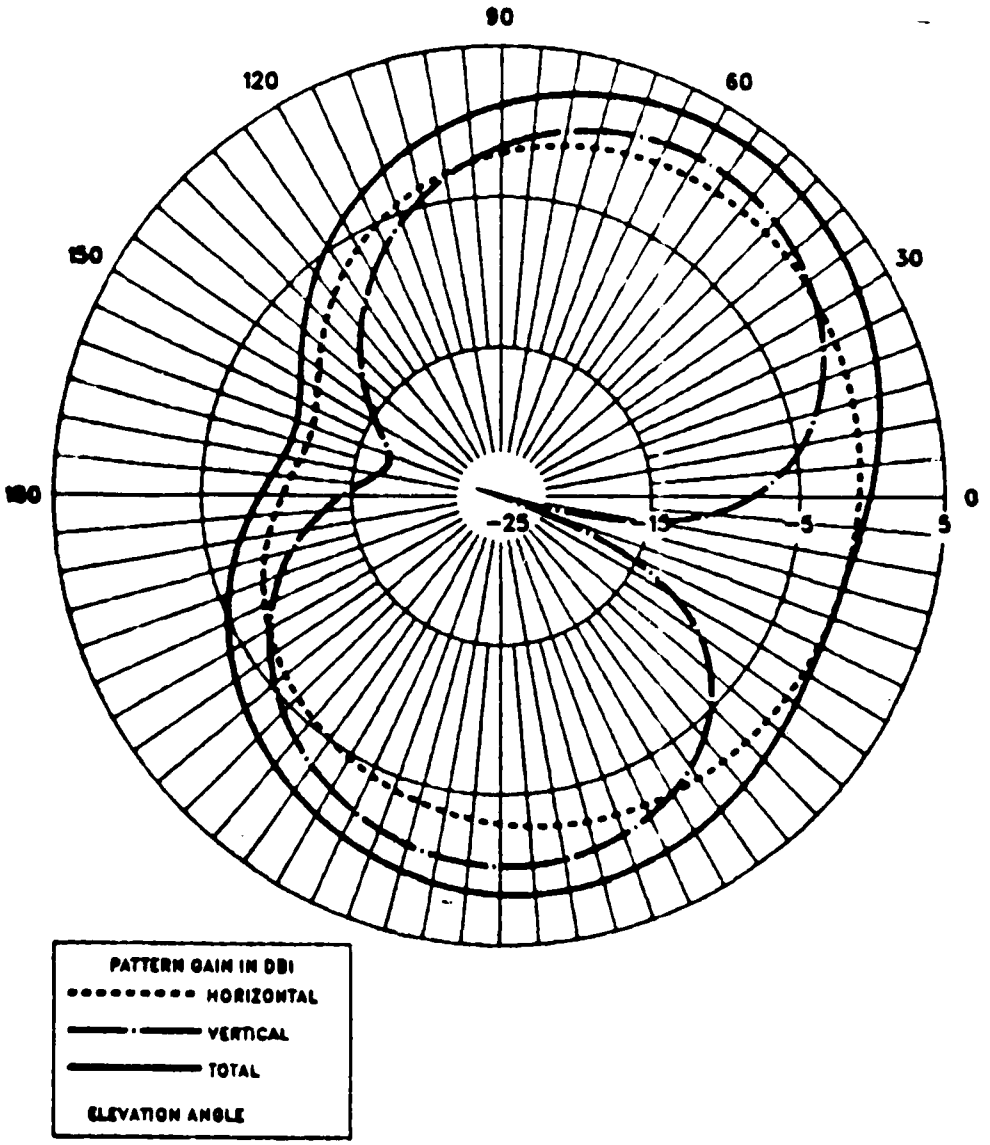

H60 IGUANA DATA RUN AT 13.974 MHZ ON 9/11/87

NAVY 437R-2 ANT, FREE SPACE, HORIZ CUT, THETA=90

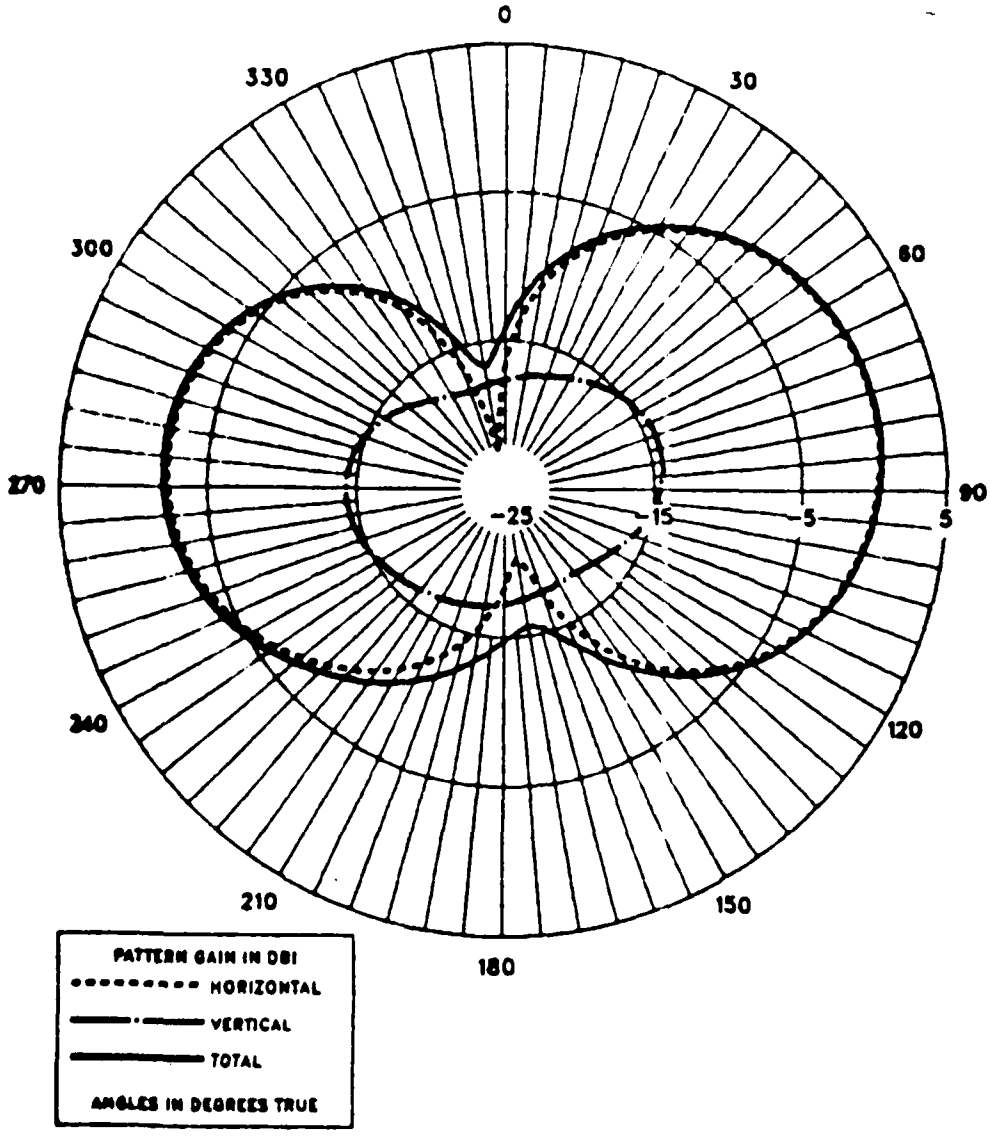

H60 IGUANA DATA RUN AT 13.974 MHZ ON 9/11/87

NAVY 437R-2 ANT, FREE SPACE, HORIZ CUT, THETA=26

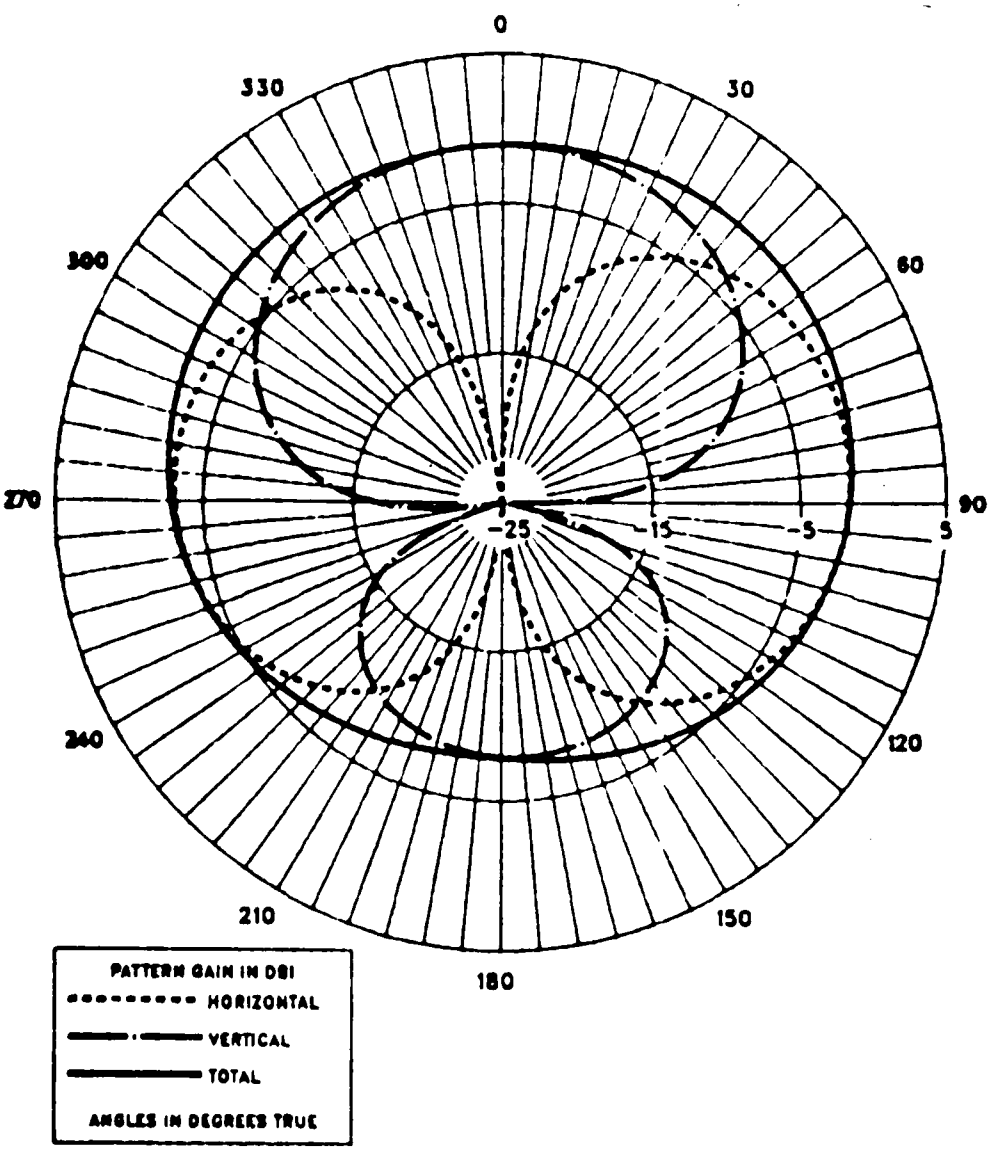

H60 IGUANA DATA RUN AT 13.974 MHZ ON 9/11/87

NAVY 437R-2 ANT, FREE SPACE, VERT CUT, PHI=0

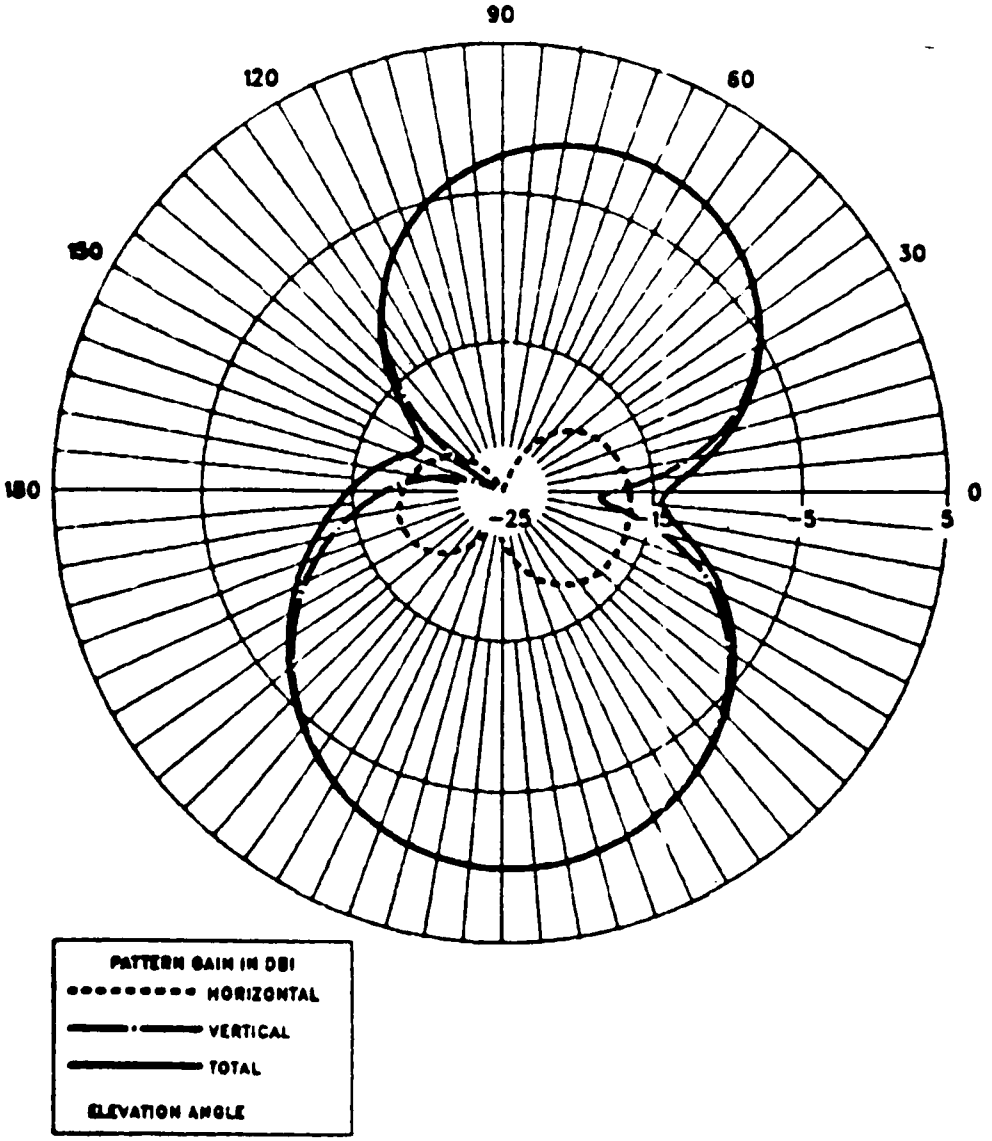

H60 IGUANA DATA RUN AT 13.974 MHZ ON 9/11/87

NAVY 437R-2 ANT, FREE SPACE, VERT CUT, PHI=45

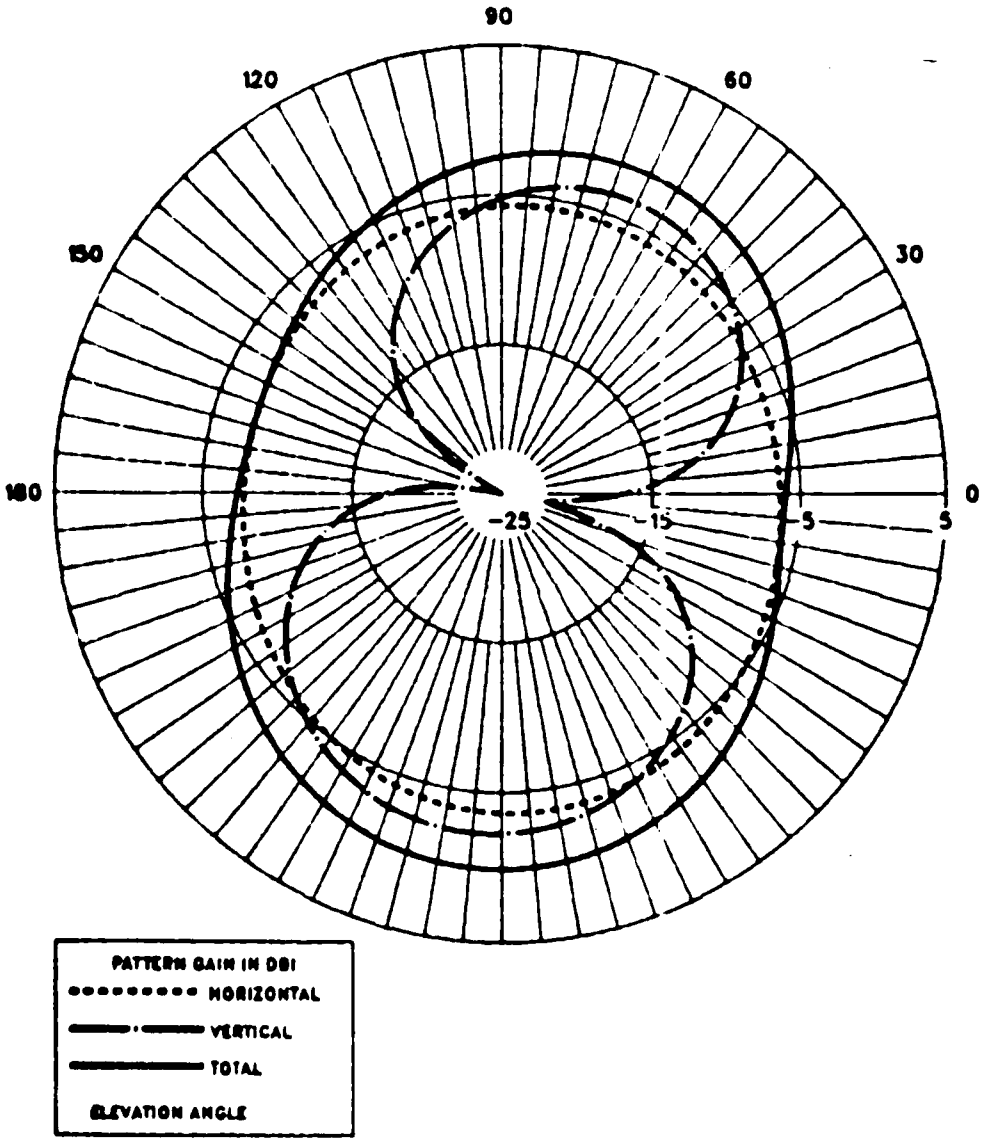

H60 IGUANA DATA RUN AT 13.974 MHZ ON 9/11/87

CG 437R-2 ANT, FREE SPACE, HORIZ CUT, THETA=90

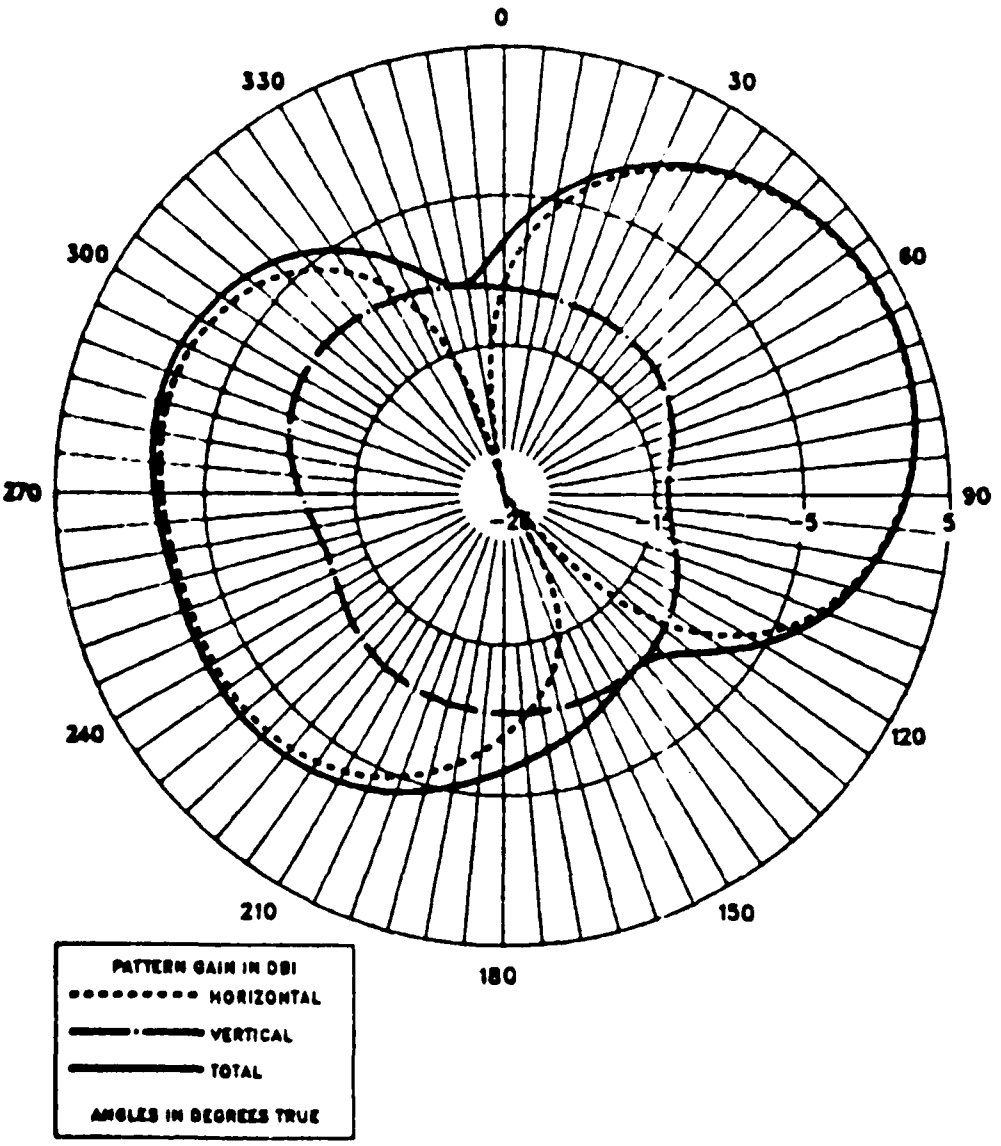

H60 IGUANA DATA RUN AT 13.974 MHZ ON 9/11/87

CG 437R-2 ANT, FREE SPACE, HORIZ CUT, THETA=26

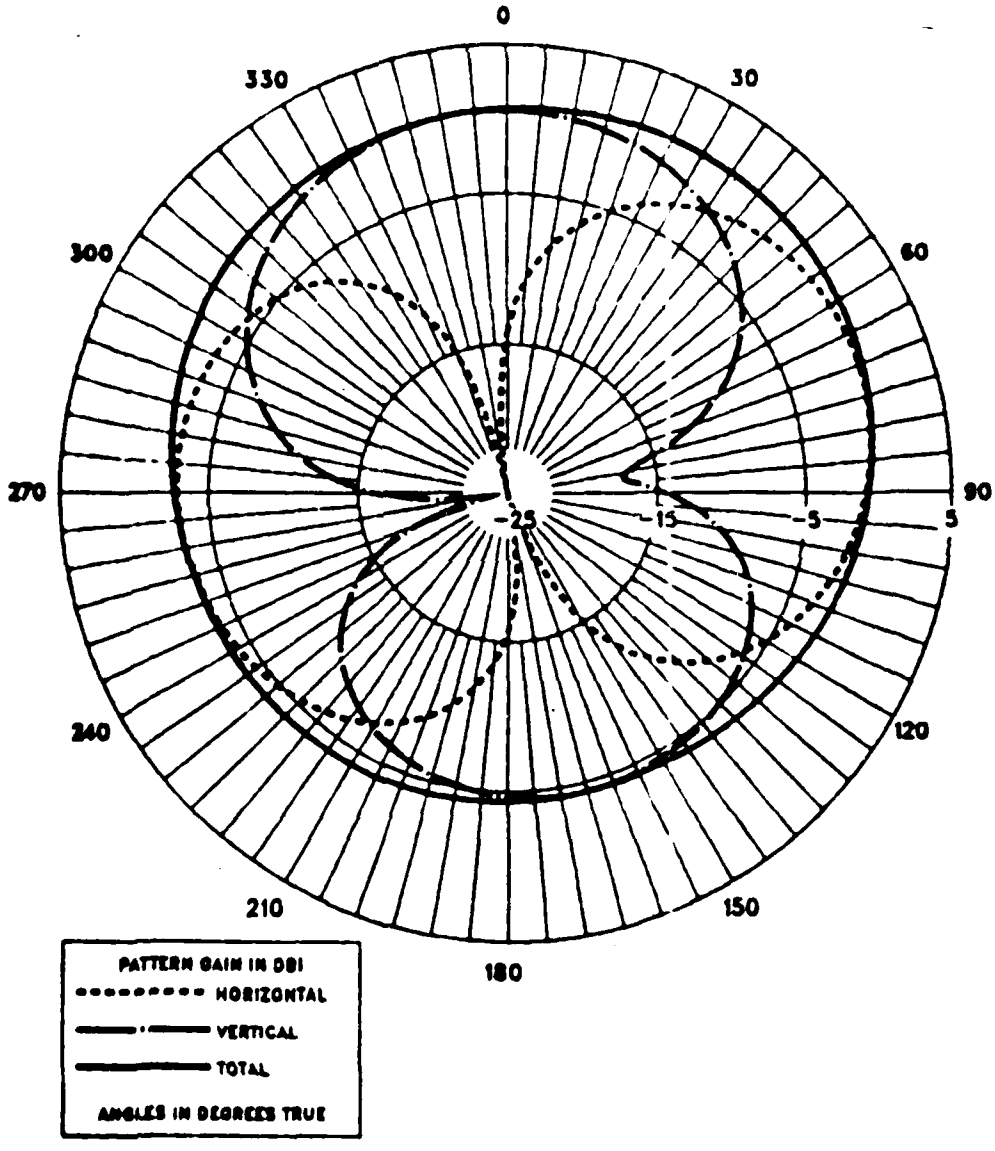

H60 IGUANA DATA RUN AT 13.974 MHZ ON 9/11/87

CG 437R-2 ANT, FREE SPACE, VERT CUT, PHI=0

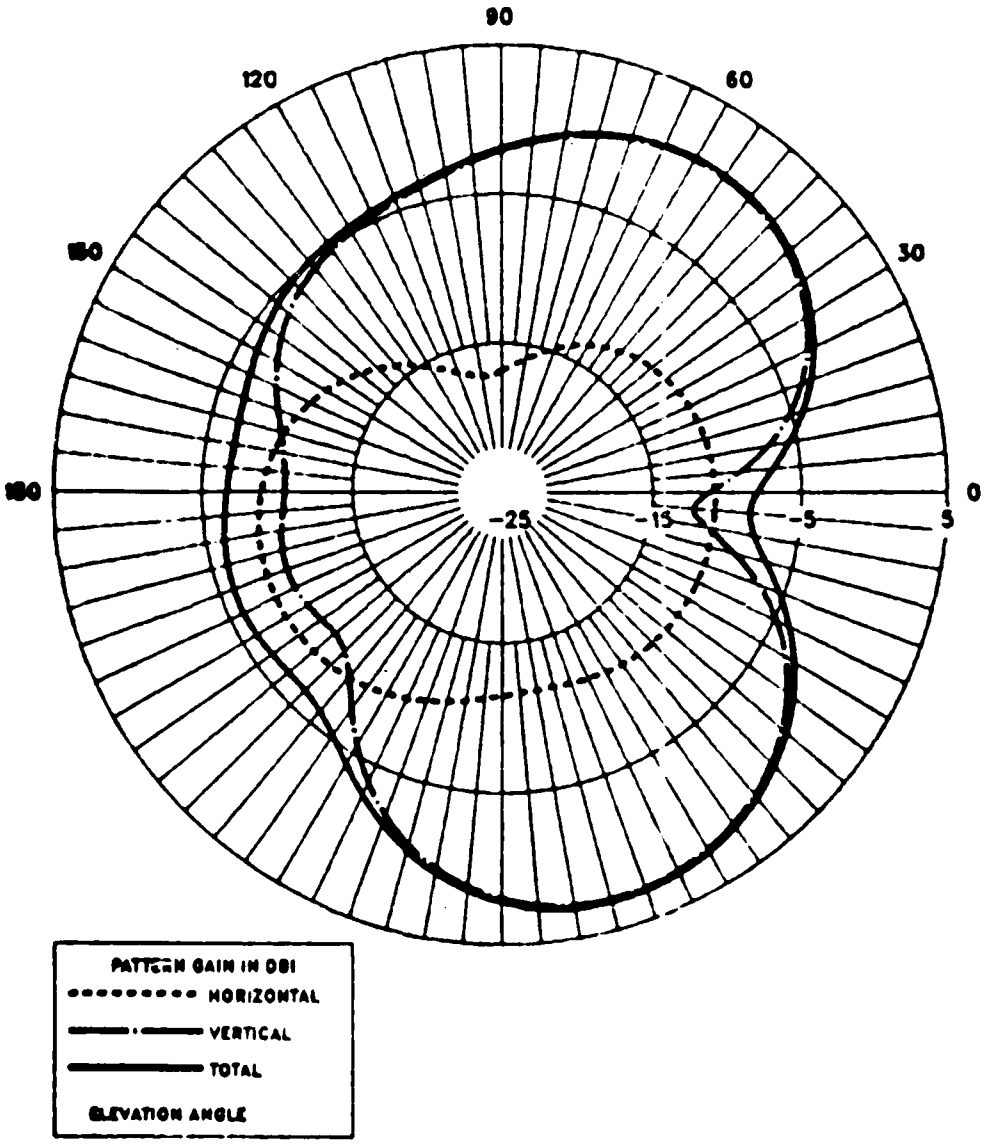

H60 IGUANA DATA RUN AT 13.974 MHZ ON 9/11/87

CG 437R-2 ANT, FREE SPACE, VERT CUT, PHI=45

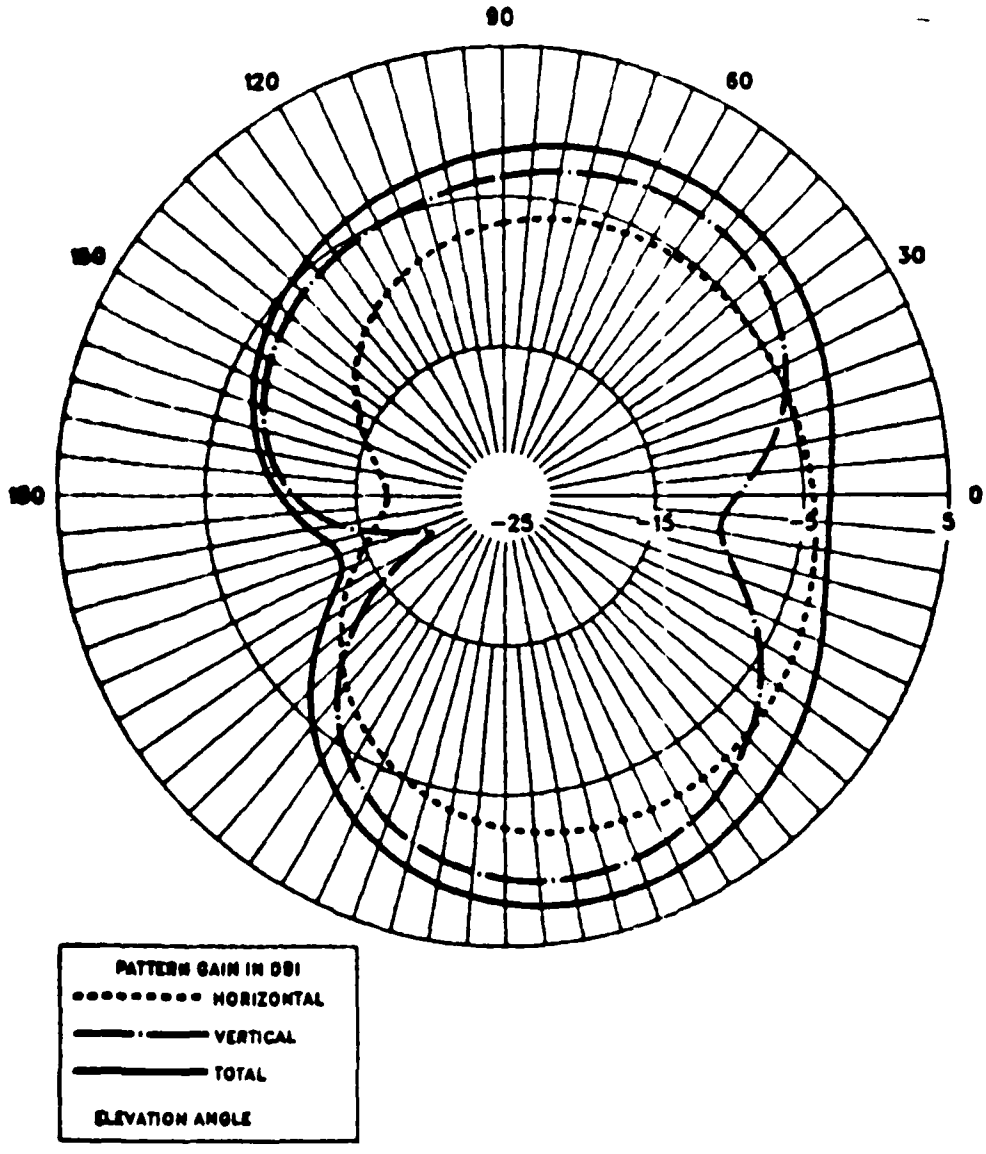

H60 IGUANA DATA RUN AT 13.974 MHZ ON 9/11/87

ARMY TUBE ANT, FREE SPACE, HORIZ CUT, THETA=90

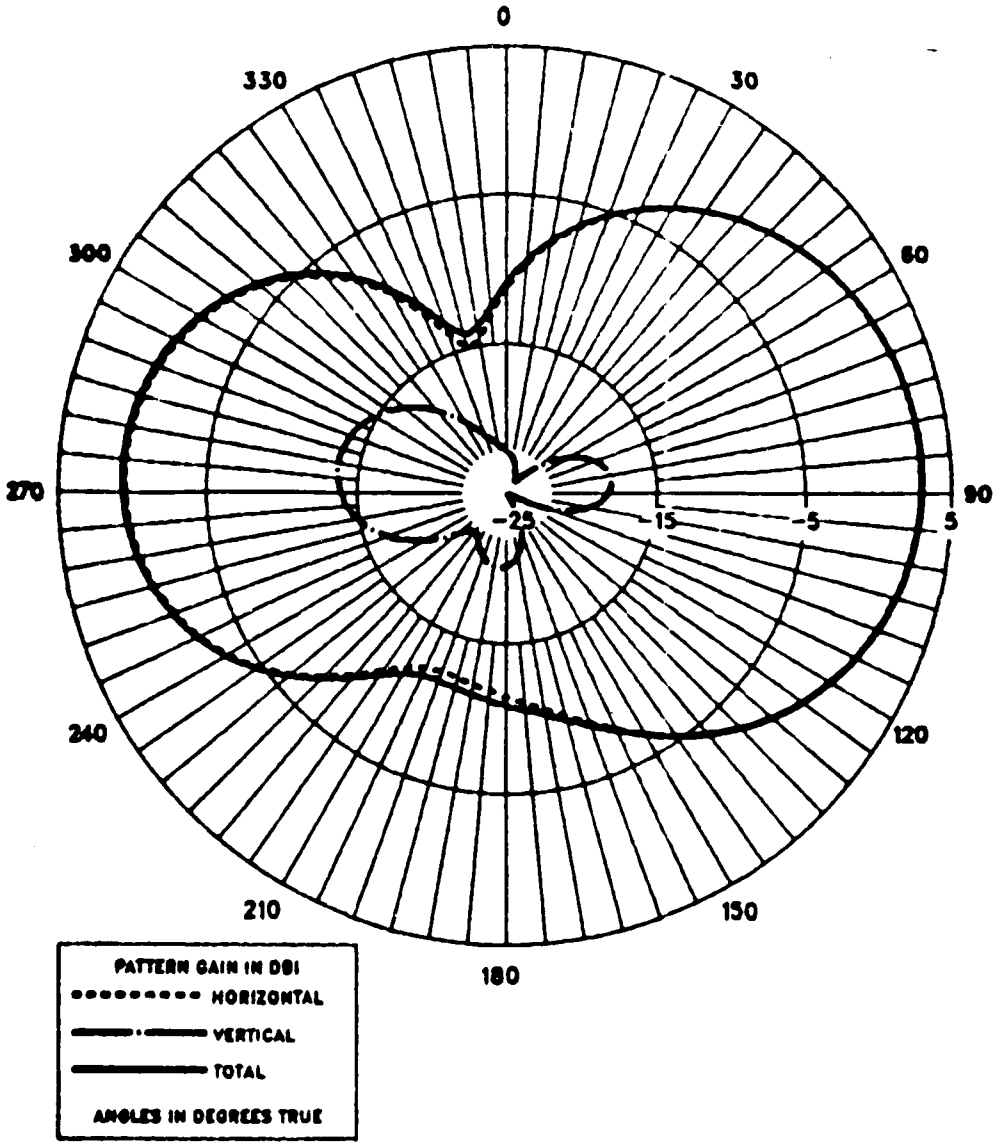

H60 IGUANA DATA RUN AT 13.974 MHZ ON 9/11/87

ARMY TUBE ANT, FREE SPACE, HORIZ CUT, THETA=26

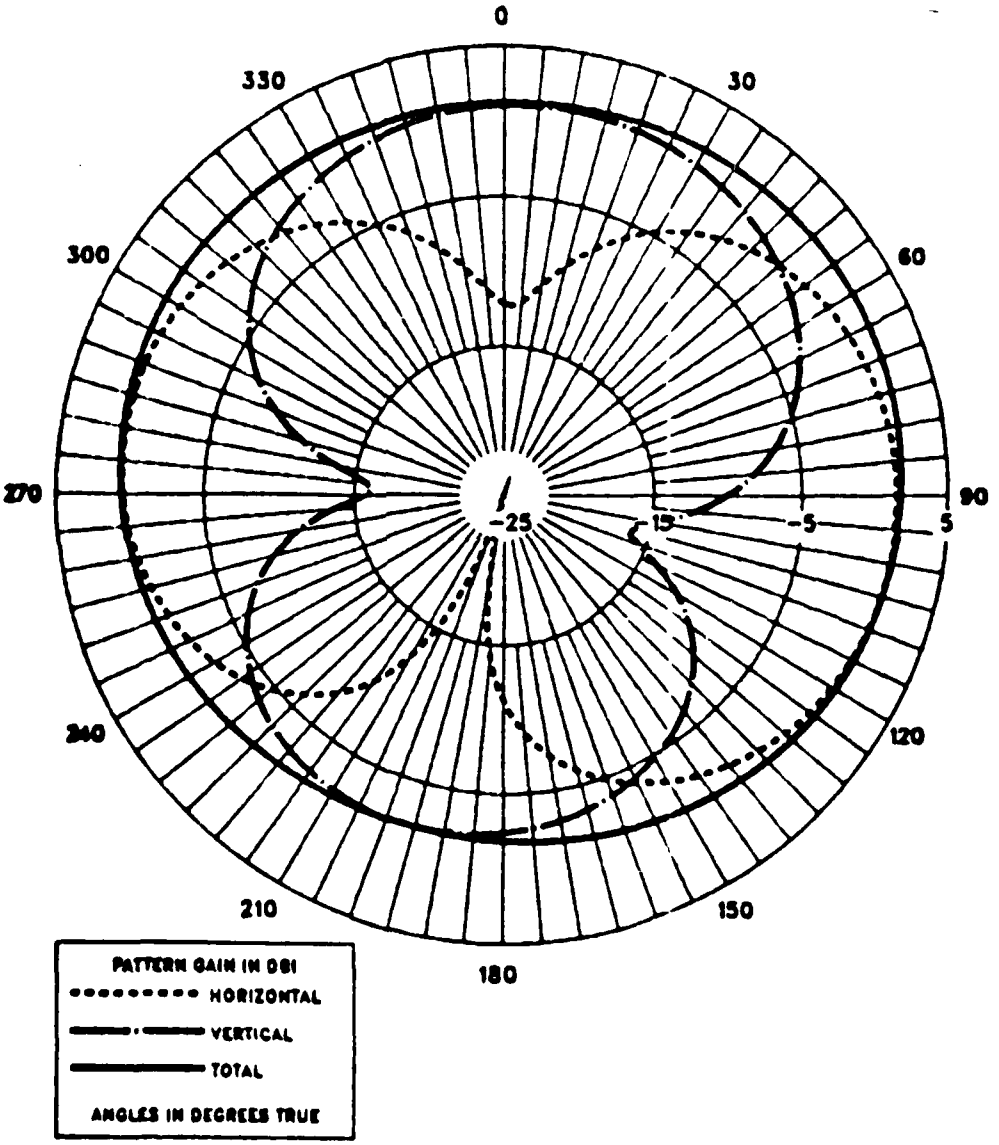

H60 IGUANA DATA RUN AT 13.974 MHZ ON 9/11/87

ARMY TUBE ANT, FREE SPACE, VERT CUT, PHI=0

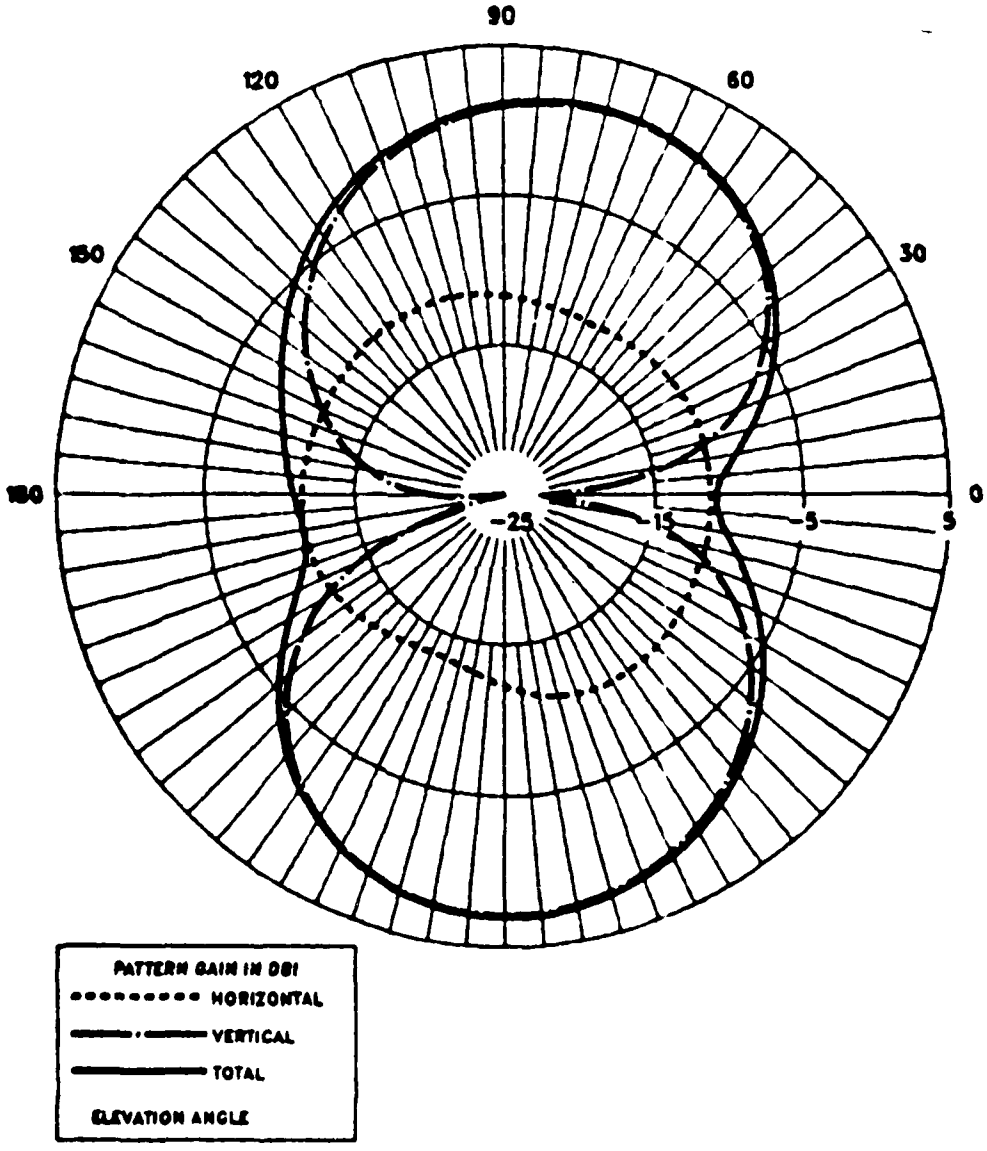

H60 IGUANA DATA RUN AT 13.974 MHZ ON 9/11/87

ARMY TUBE ANT, FREE SPACE, VERT CUT, PHI=45

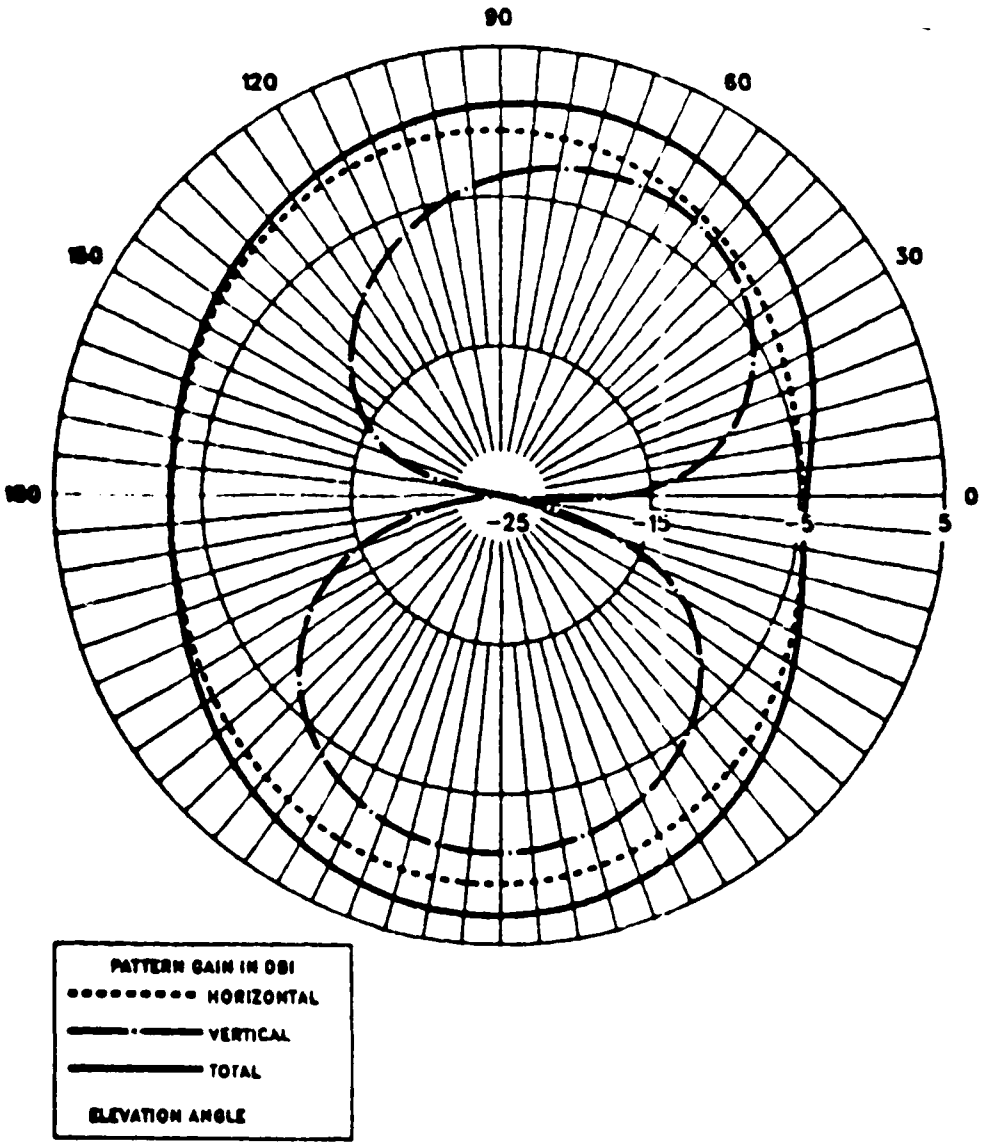

H60 IGUANA DATA RUN AT 18.1MHZ ON 8/22/87

LONG-WIRE ANT, FREE SPACE, HORIZ CUT, THETA=90

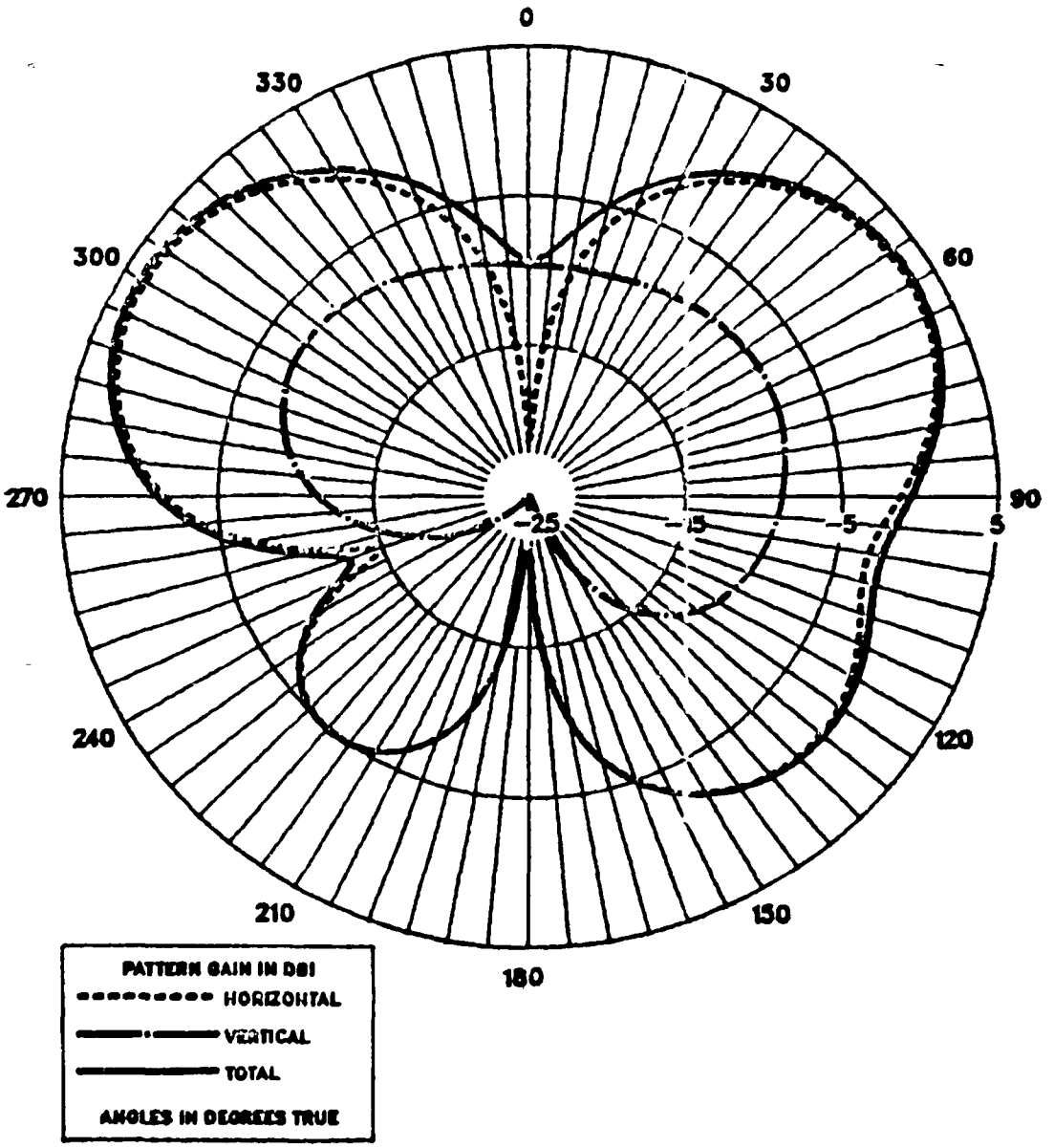

H60 IGUANA DATA RUN AT 18.1MHZ ON 8/22/87

LONG-WIRE ANT, FREE SPACE, HORIZ CUT, THETA=26

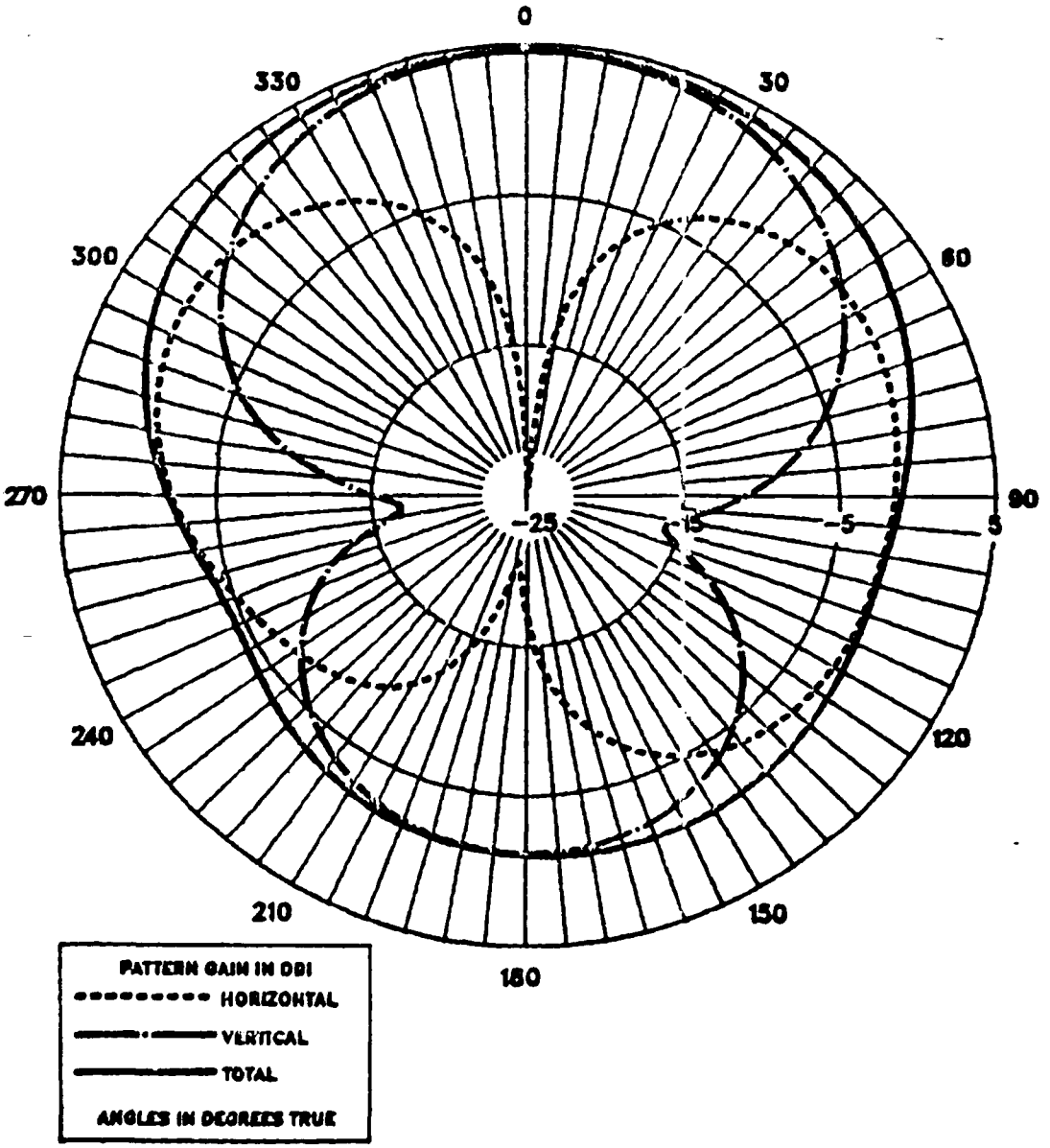

H60 IGUANA DATA RUN AT 18.1MHZ ON 8/22/87

LONG-WIRE ANT, FREE SPACE, VERT CUT, PHI=0

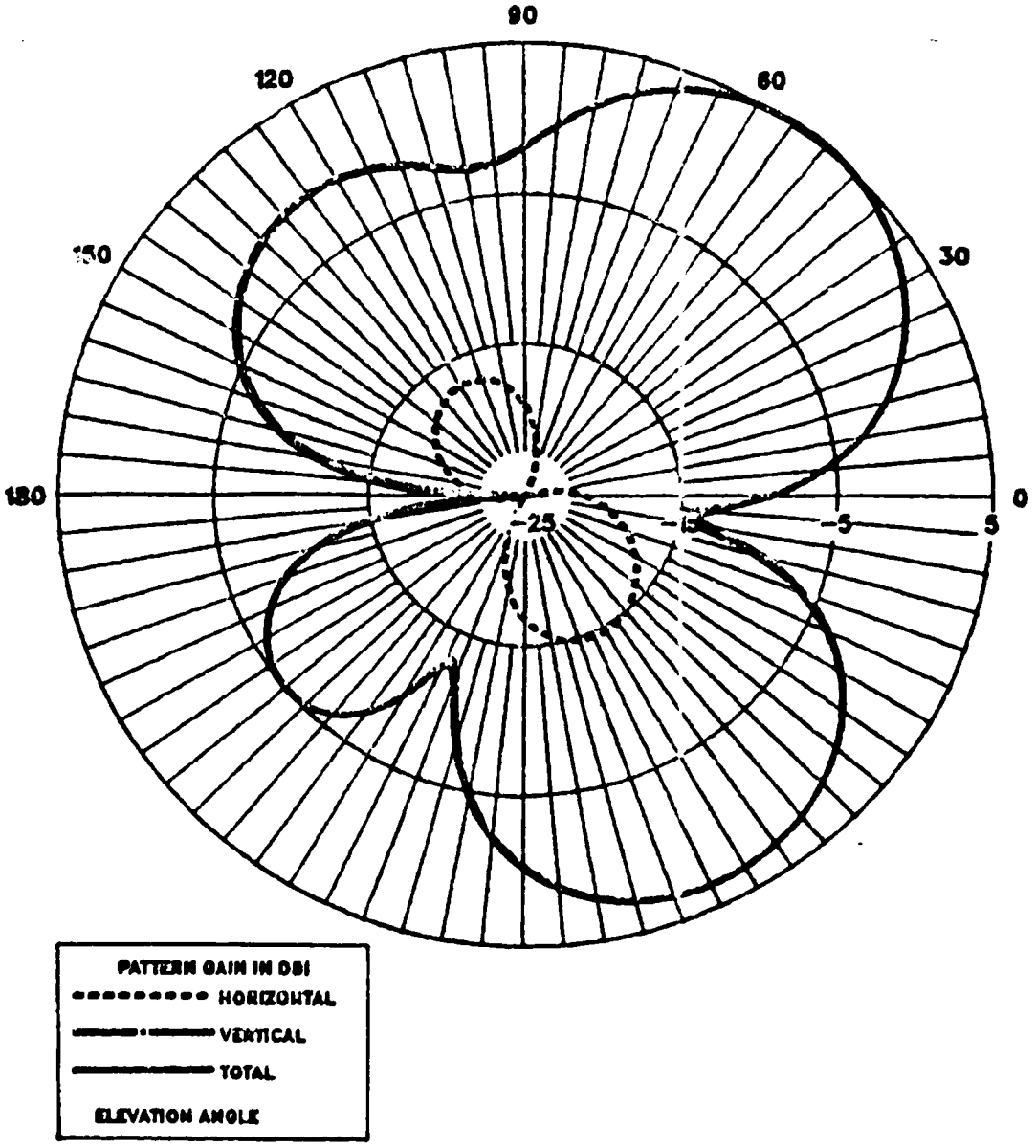

H60 IGUANA DATA RUN AT 18.1MHZ ON 8/22/87

LONG-WIRE ANT, FREE SPACE, VERT CUT, PHI=45

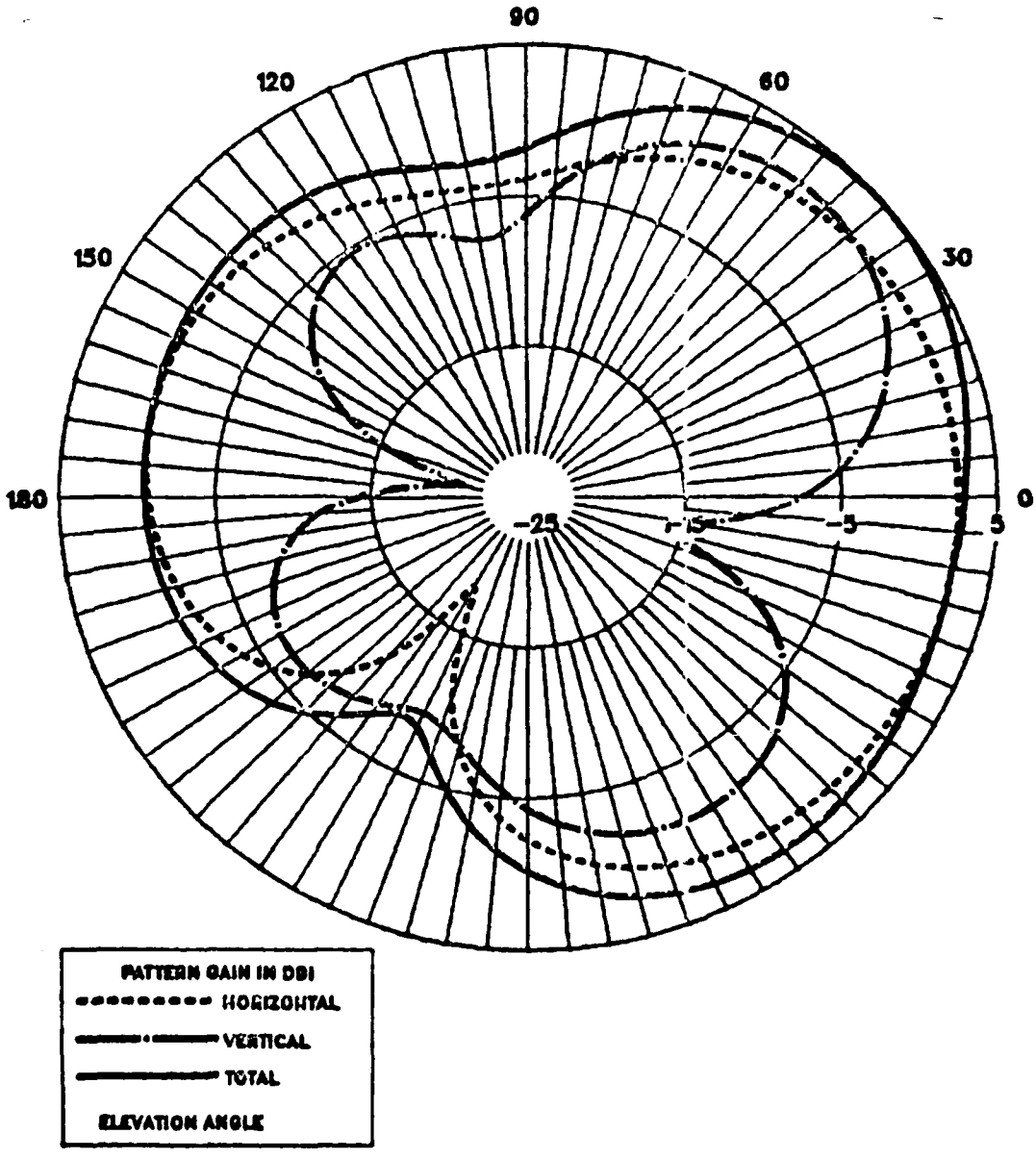

H60 IGUANA DATA RUN AT 18.1MHZ ON 8/22/87

NAVY 437R–2 ANT, FREE SPACE, HORIZ CUT, THETA=90

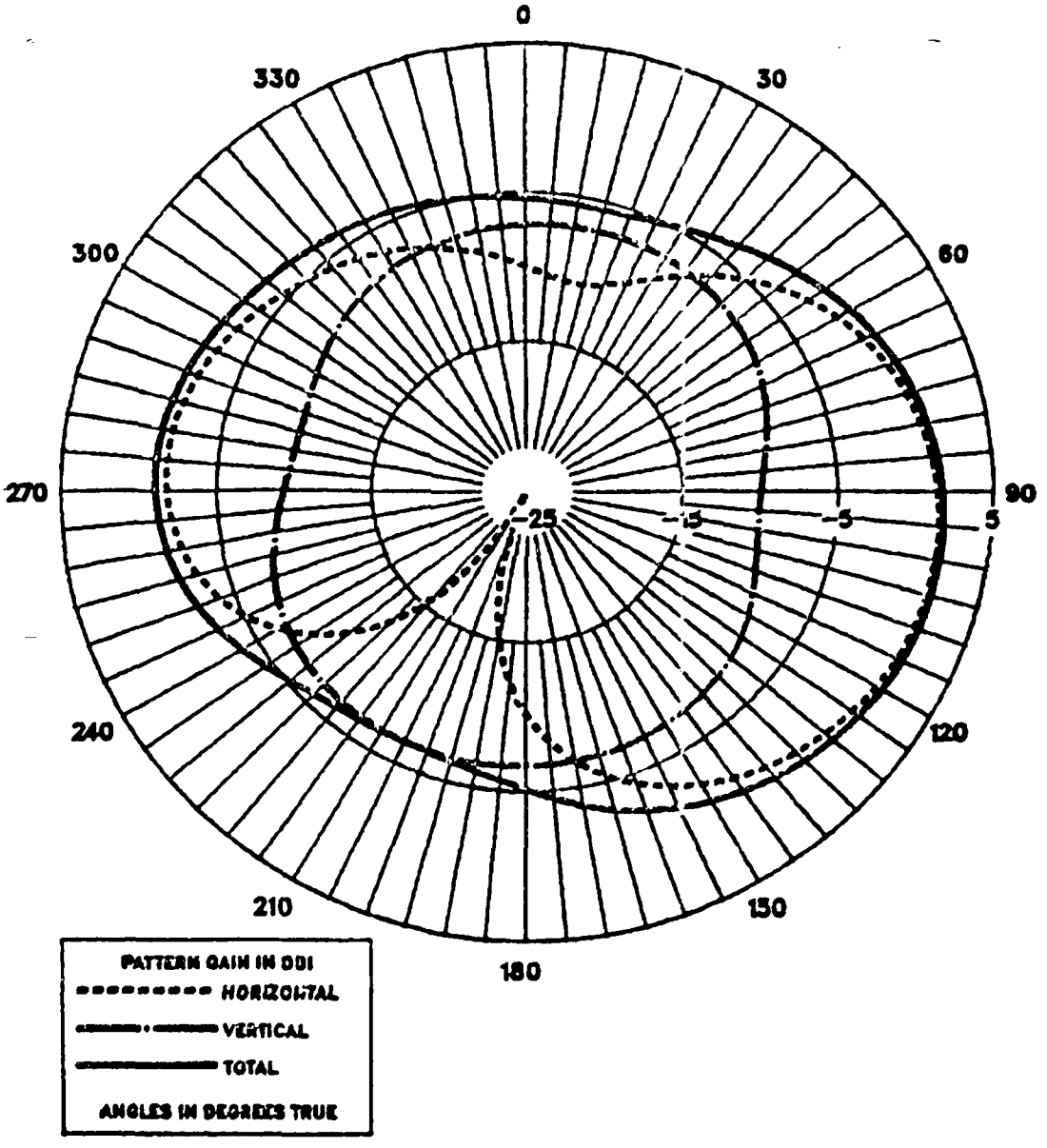

H60 IGUANA DATA RUN AT 18.1MHZ ON 8/22/87

NAVY 437R–2 ANT, FREE SPACE, HORIZ CUT, THETA=26

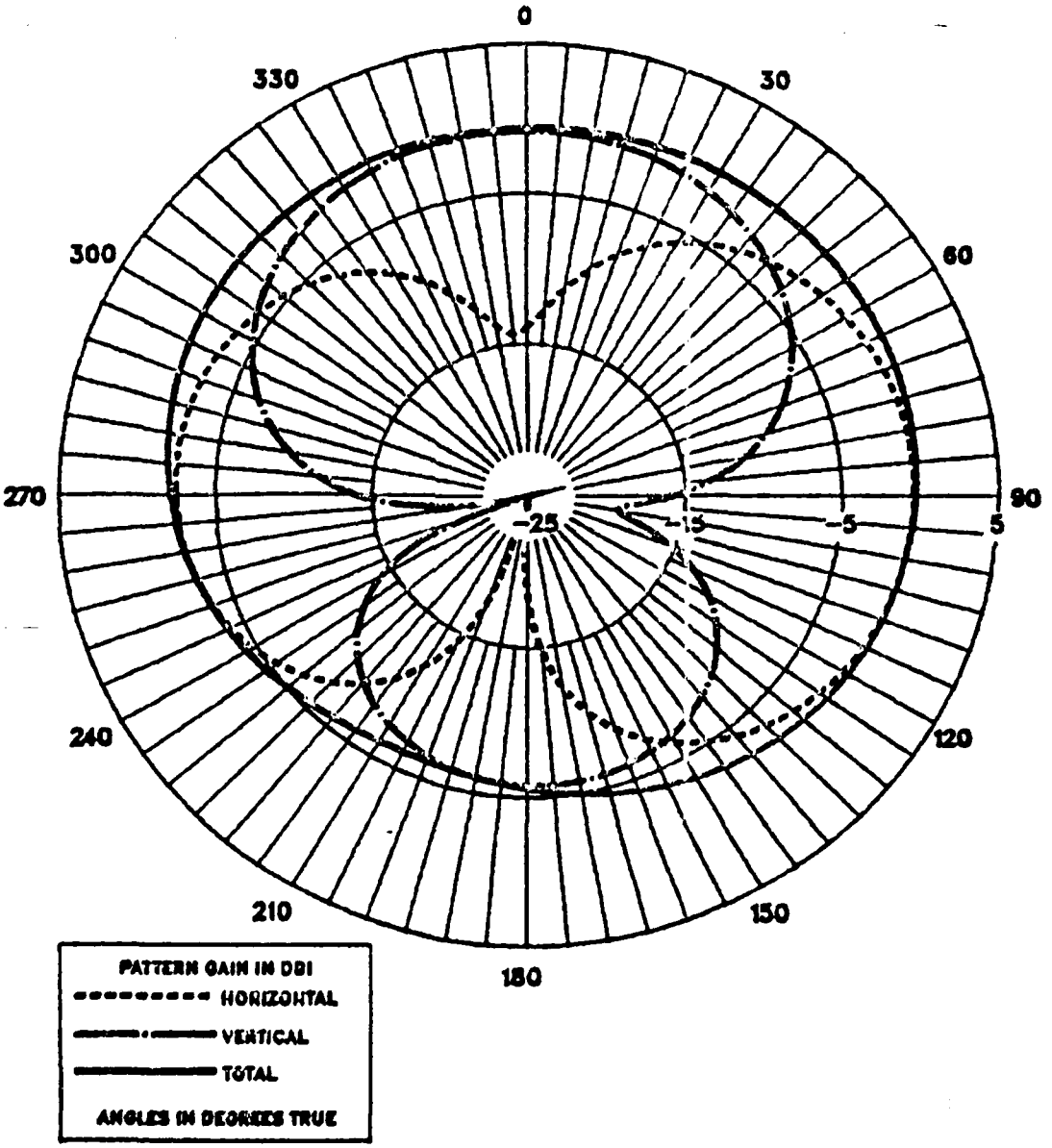

H60 IGUANA DATA RUN AT 18.1MHZ ON 8/22/87

NAVY 437R-2 ANT, FREE SPACE, VERT CUT, PHI=0

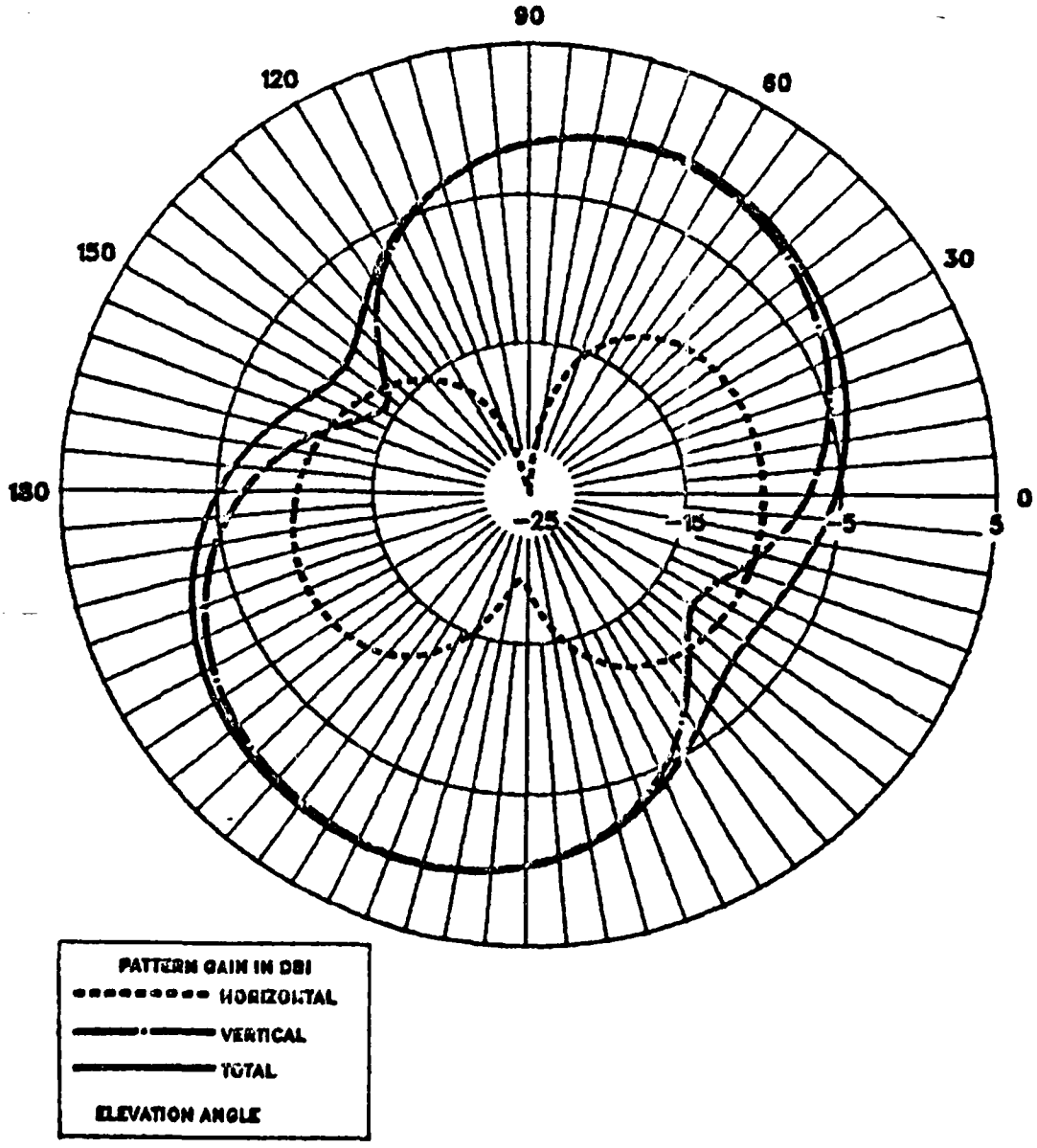

H60 IGUANA DATA RUN AT 18.1MHZ ON 8/22/87

NAVY 437R-2 ANT, FREE SPACE, VERT CUT, PHI=45

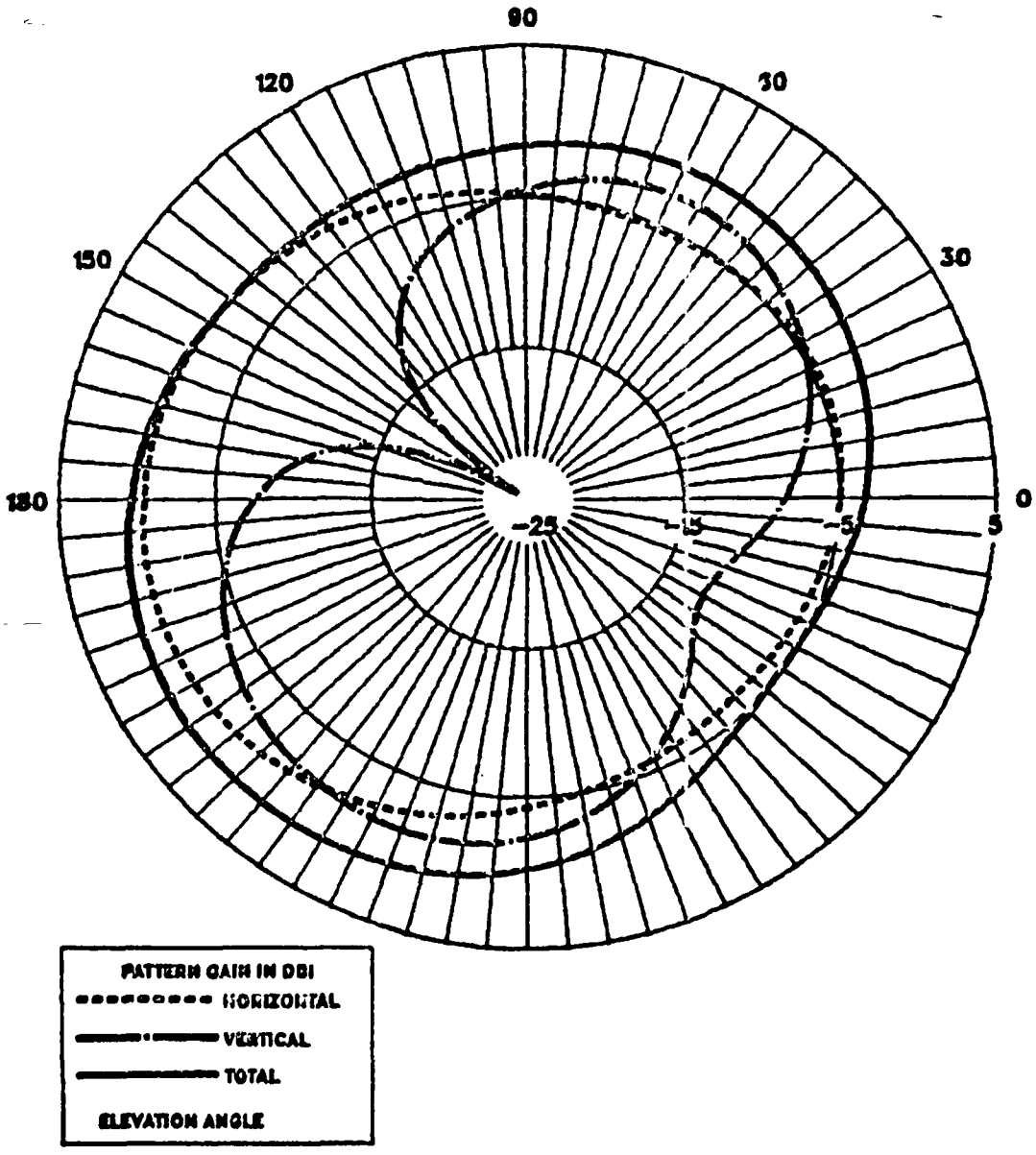

H60 IGUANA DATA RUN AT 18.1MHZ ON 8/22/87

CG 437R-2 ANT, FREE SPACE, HORIZ CUT, THETA=90

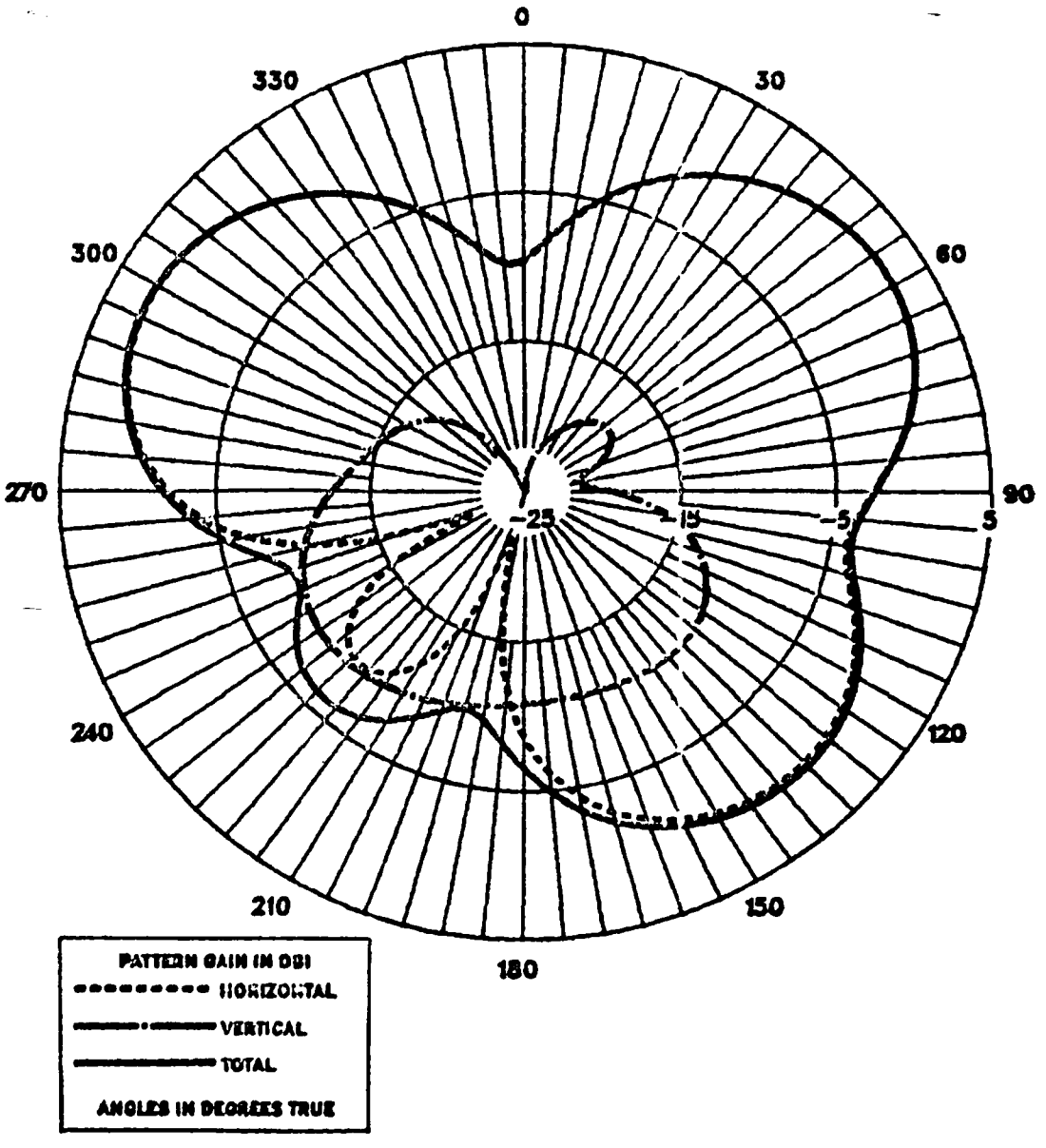

H60 IGUANA DATA RUN AT 18.1MHZ ON 8/22/87

CG 437R-2 ANT, FREE SPACE, HORIZ CUT, THETA=26

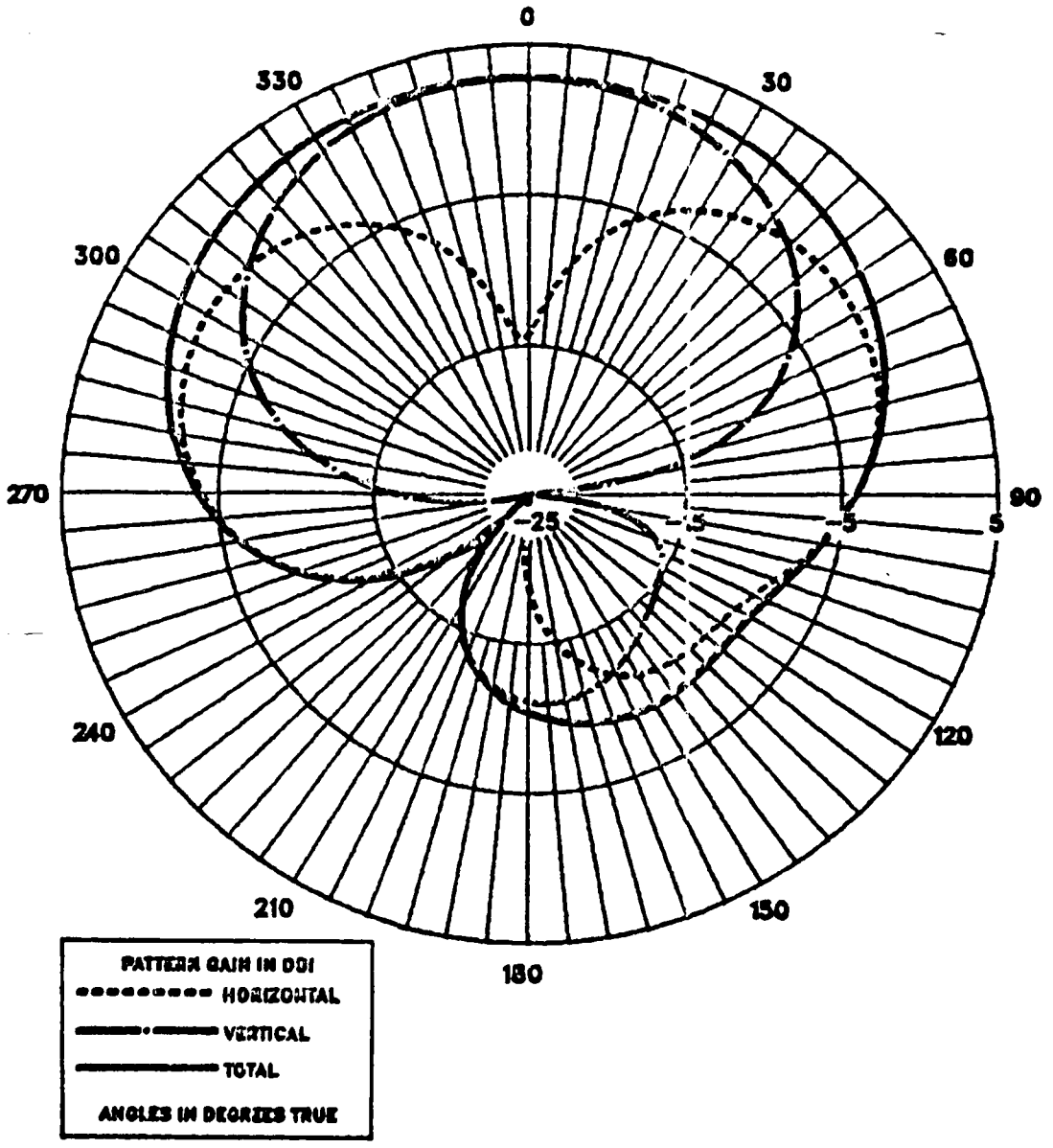

H60 IGUANA DATA RUN AT 18.1MHZ ON 8/22/87

CG 437R-2 ANT, FREE SPACE, VERT CUT, PHI=0

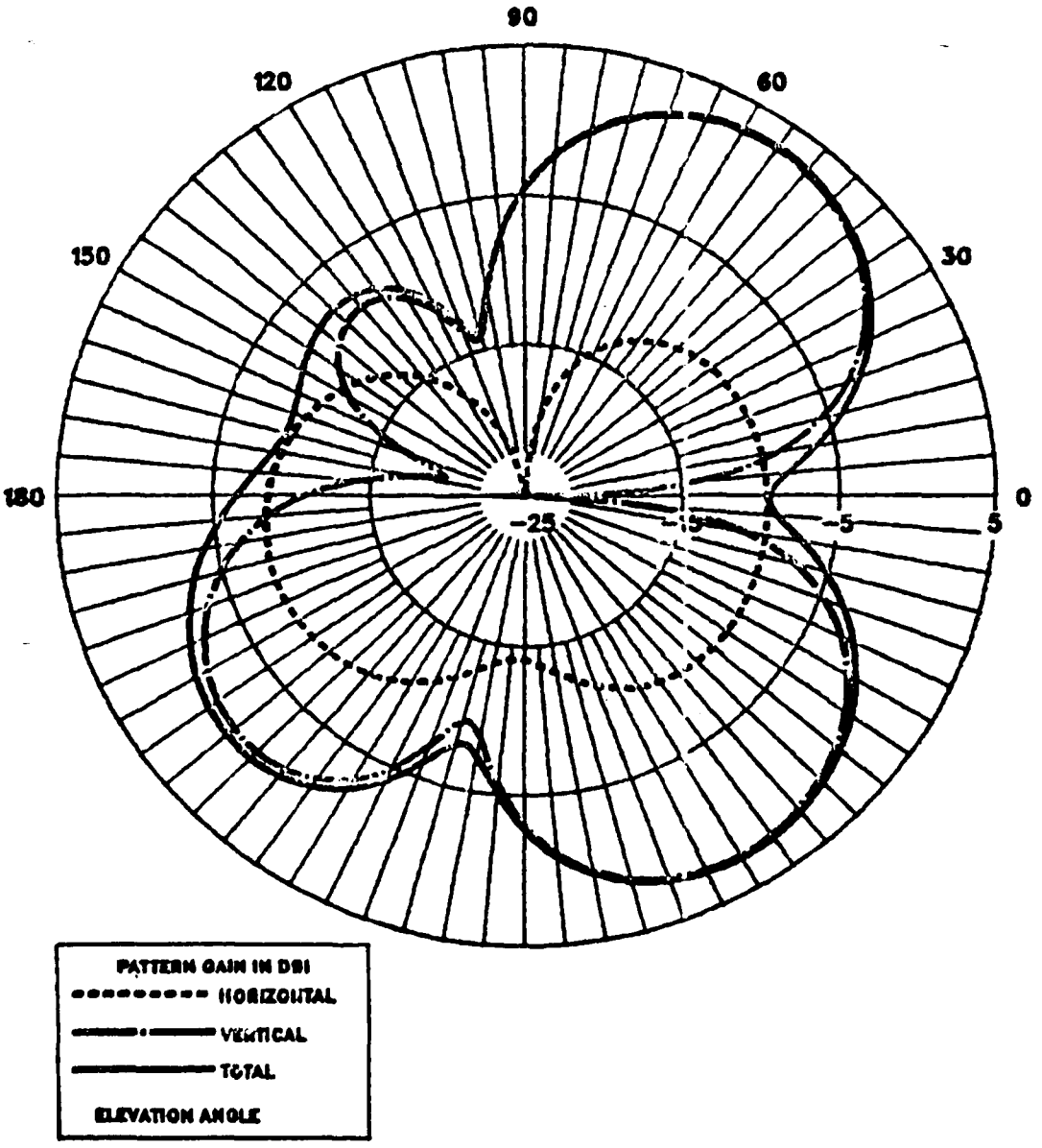

H60 IGUANA DATA RUN AT 18.1MHZ ON 8/22/87

CG 437R-2 ANT, FREE SPACE, VERT CUT, PHI=45

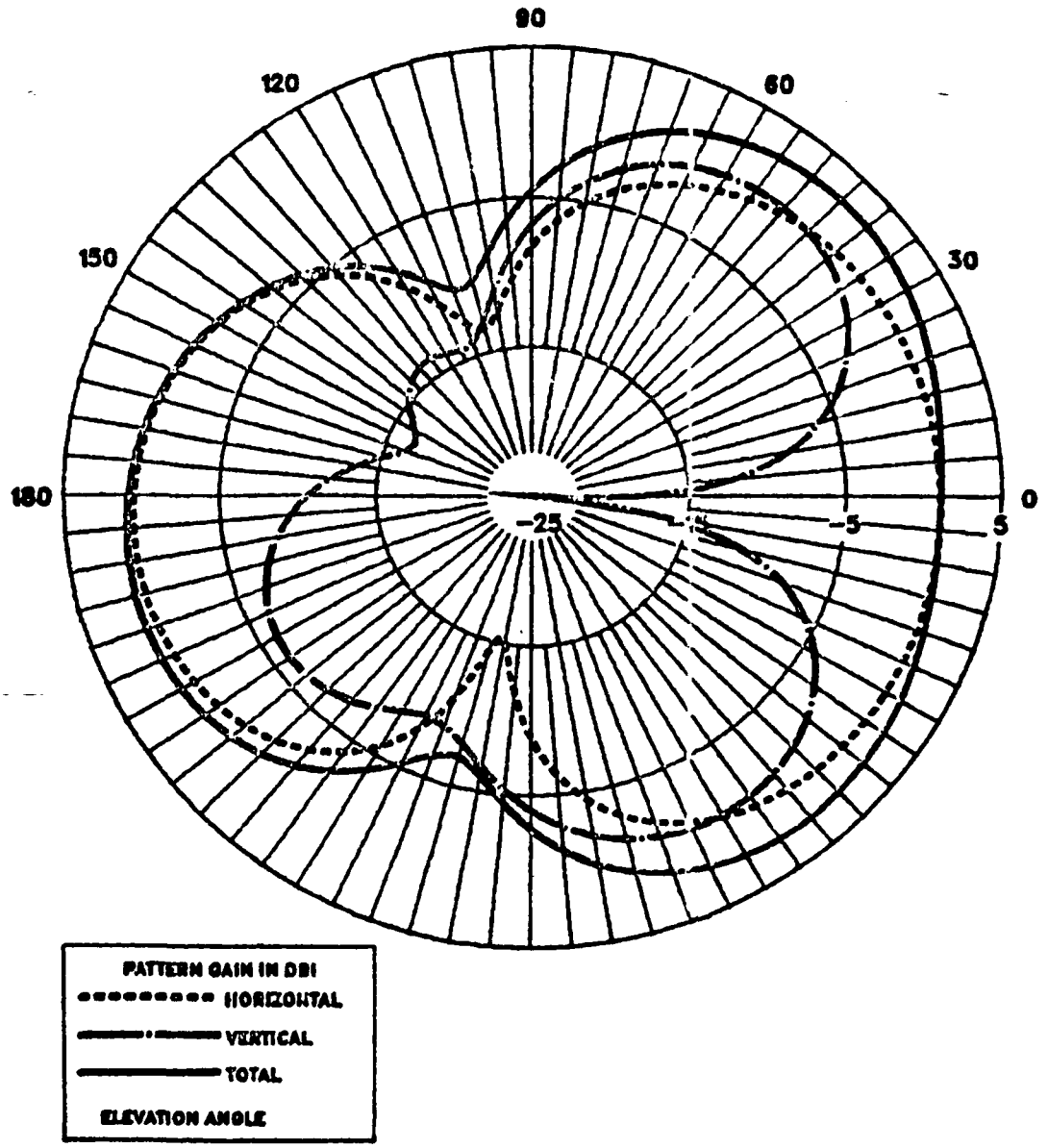

H60 IGUANA DATA RUN AT 18.1MHZ ON 8/22/87

ARMY-TYPE TUBE ANT, FREE SPACE, HORIZ CUT, THETA=90

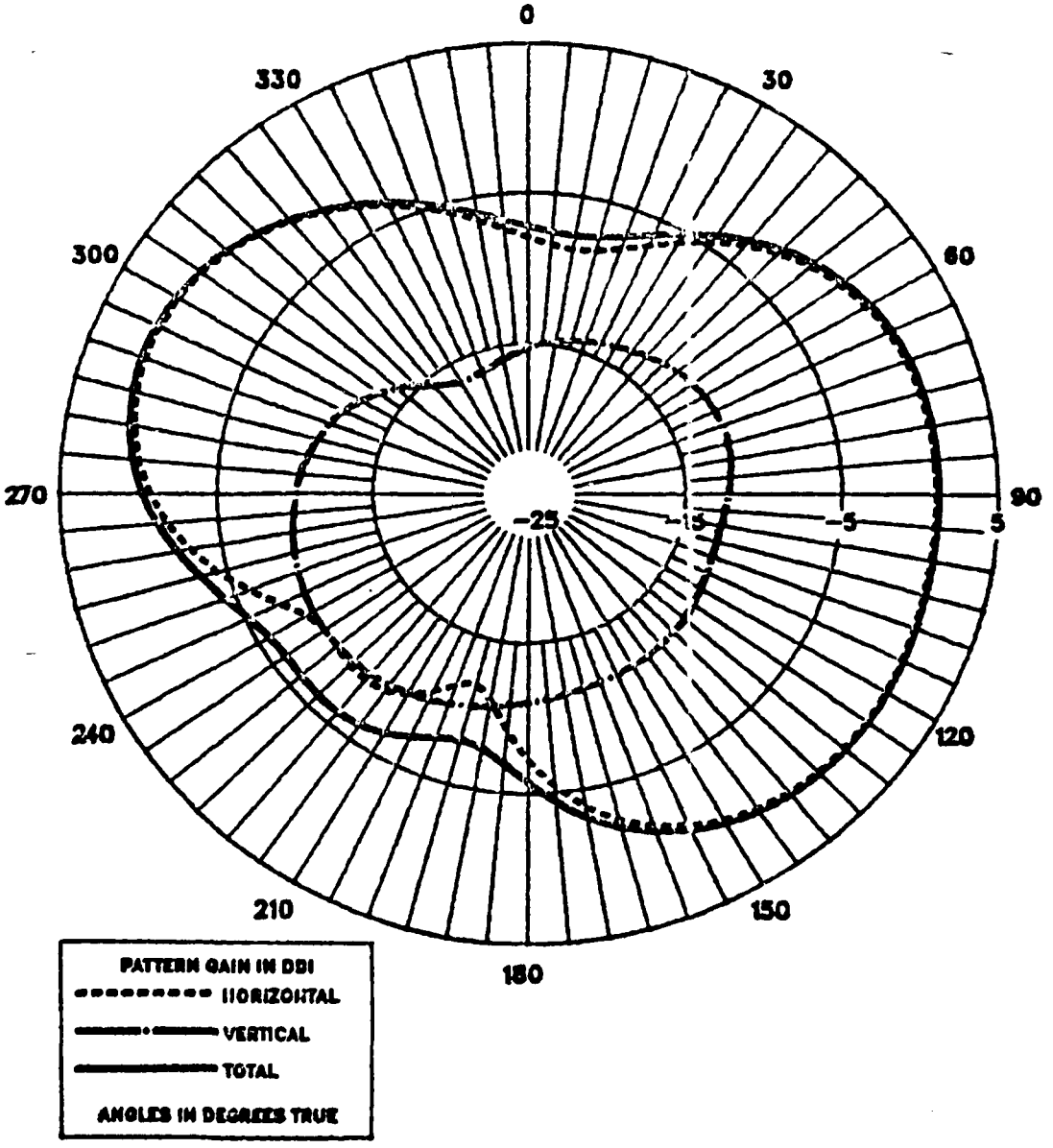

H60 IGUANA DATA RUN AT 18.1MHZ ON 8/22/87

ARMY–TYPE TUBE ANT, FREE SPACE, HORIZ CUT, THETA=26

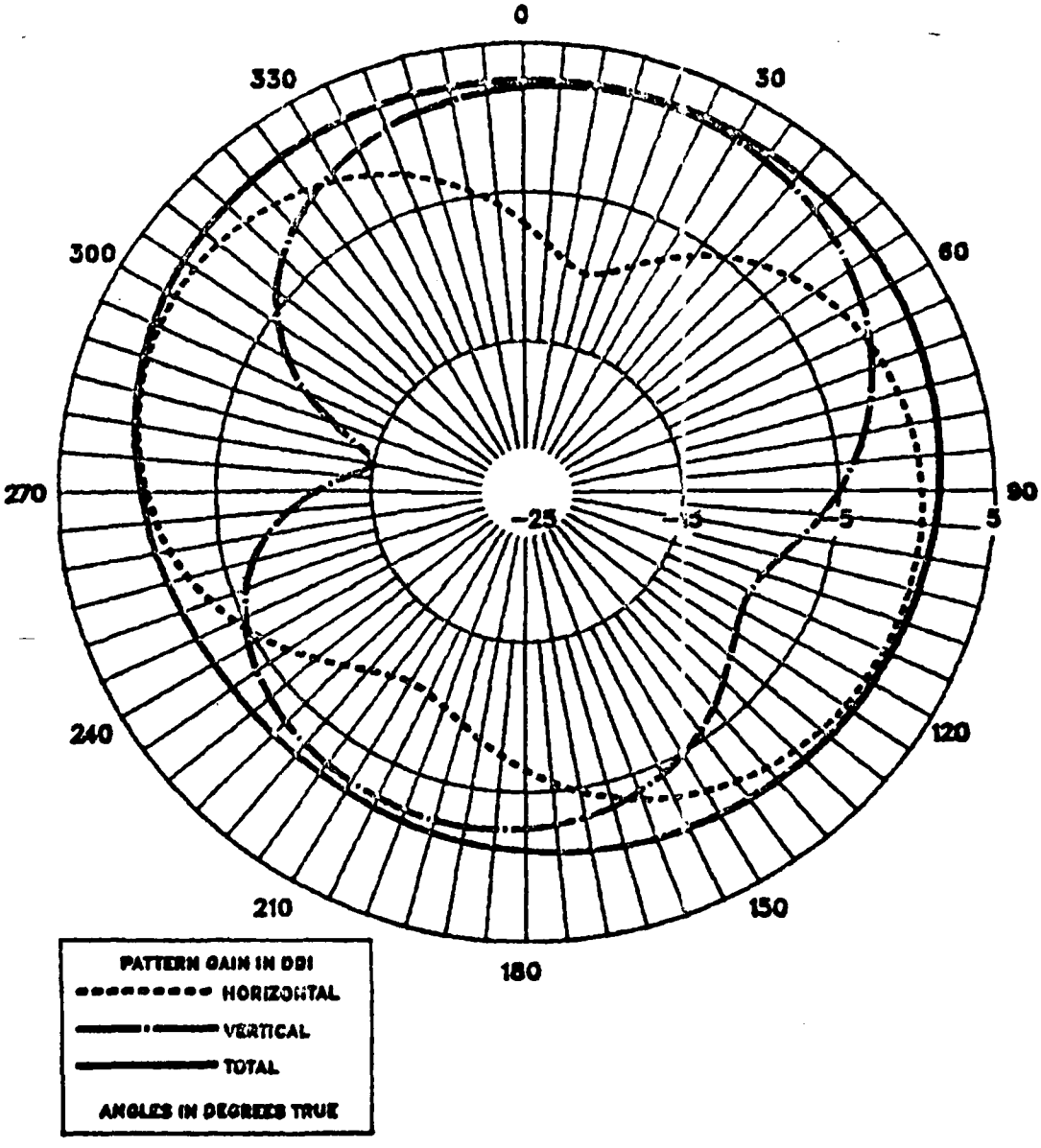

H60 IGUANA DATA RUN AT 18.1MHZ ON 8/22/87

ARMY-TYPE TUBE ANT, FREE SPACE, VERT CUT, PHI=0

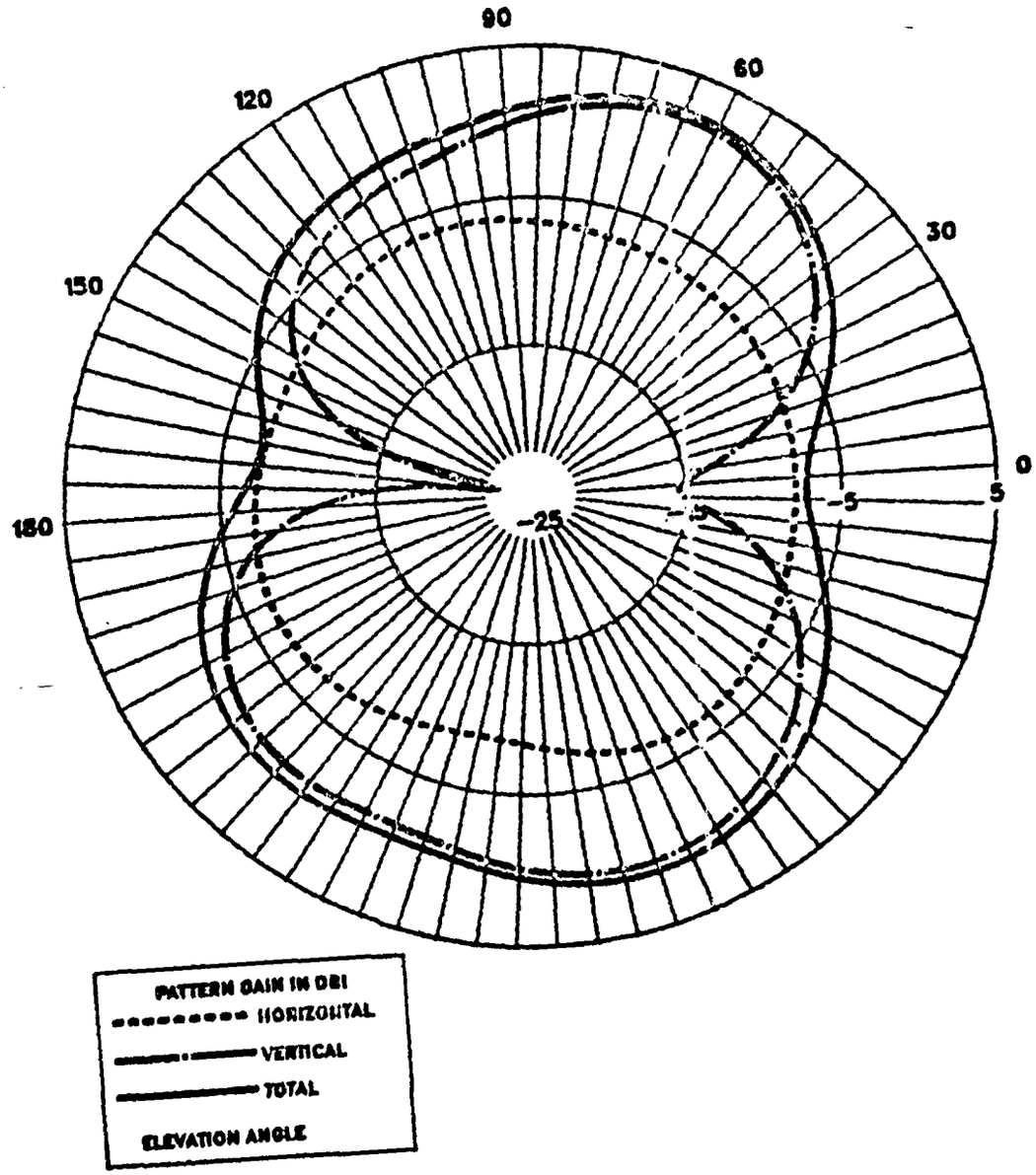

H60 IGUANA DATA RUN AT 18.1MHZ ON 8/22/87

ARMY-TYPE TUBE ANT, FREE SPACE, VERT CUT, PHI=45

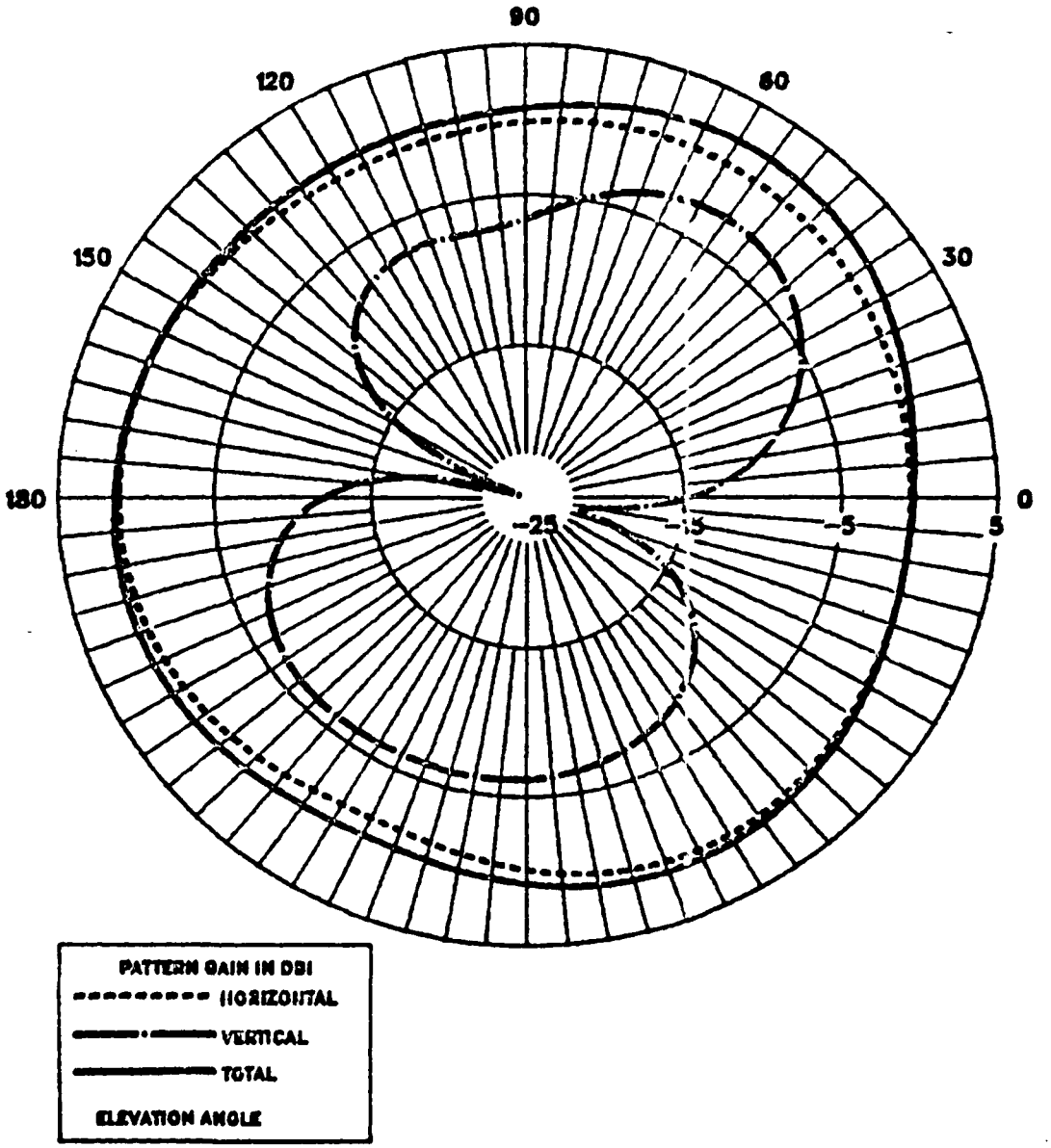

APPENDIX B
ADVANCED PROPHET SCENARIO OUTPUT

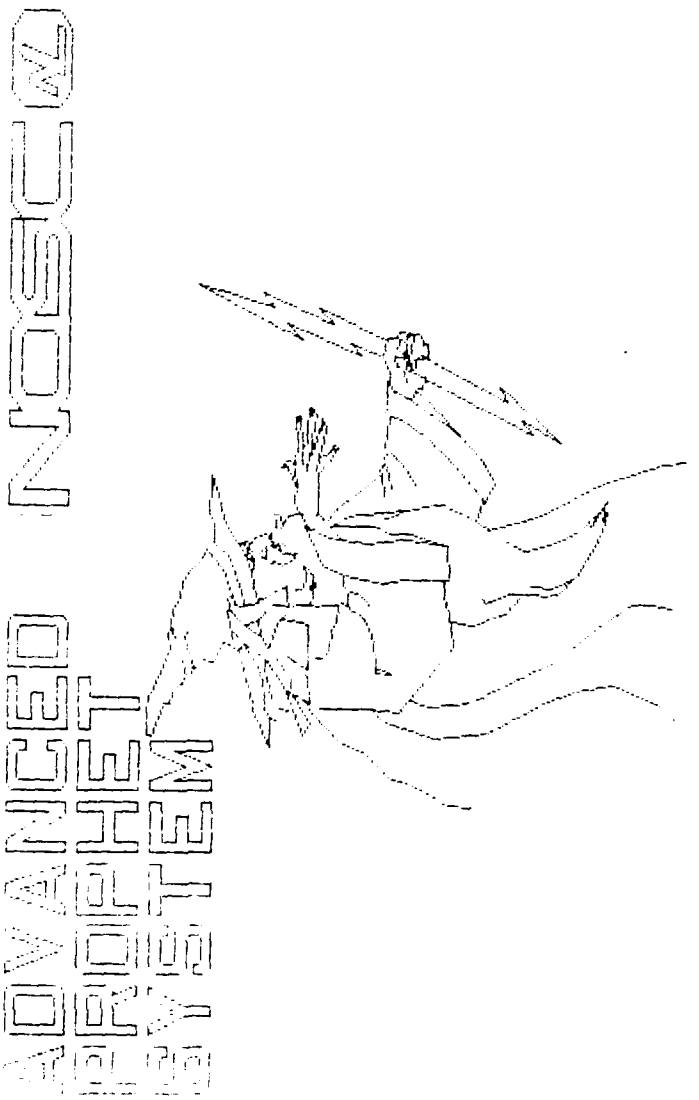

DEVELOPED AND MAINTAINED BY:
IONOSPHERIC BRANCH CODE 542 (ALGORITHM/MODEL DEVELOPMENT)
(619) 225-2002 / (AUTOVON) 933-2002
SIGNALS EXPLOITATION BRANCH CODE 772 (SYSTEM INTEGRATION)
(619) 225-2924 / (AUTOVON) 933-2924
NAVAL OCEAN SYSTEM CENTER
SAN DIEGO, CA. 92152-5000

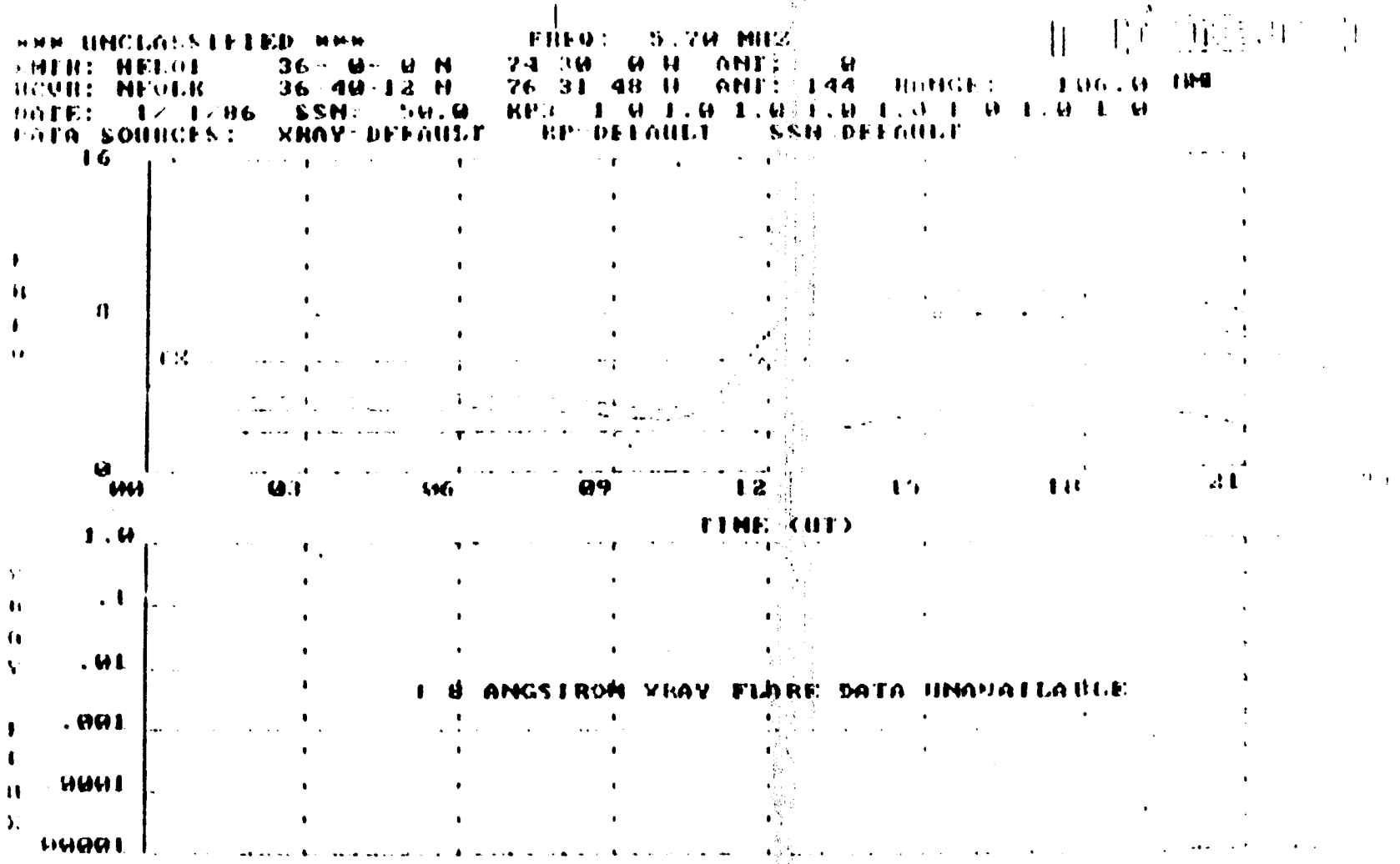
*** UNCLASSIFIED ***
XMTR: NEL01 36 0 0 N 74 30 0 W ANT: 0
RCVR: NFOLK 36 49 12 N 76 31 48 W ANT: 144 RANGE: 106.0 NM
DATE: 1/ 1/86 SSN: 50.0 KP: 1.0 1.0 1.0 1.0 1.0 1.0 1.0 1.0
DATA SOURCES: XRAY-DEFAULT KP DEFAULT SSN DEFAULT
16
8
0
00 03 06 09 12 15 18 21
TIME (UT)
1.0
.1
.01
.001
.0001
.00001
1.0 ANGSTROM XRAY FLARE DATA UNAVAILABLE

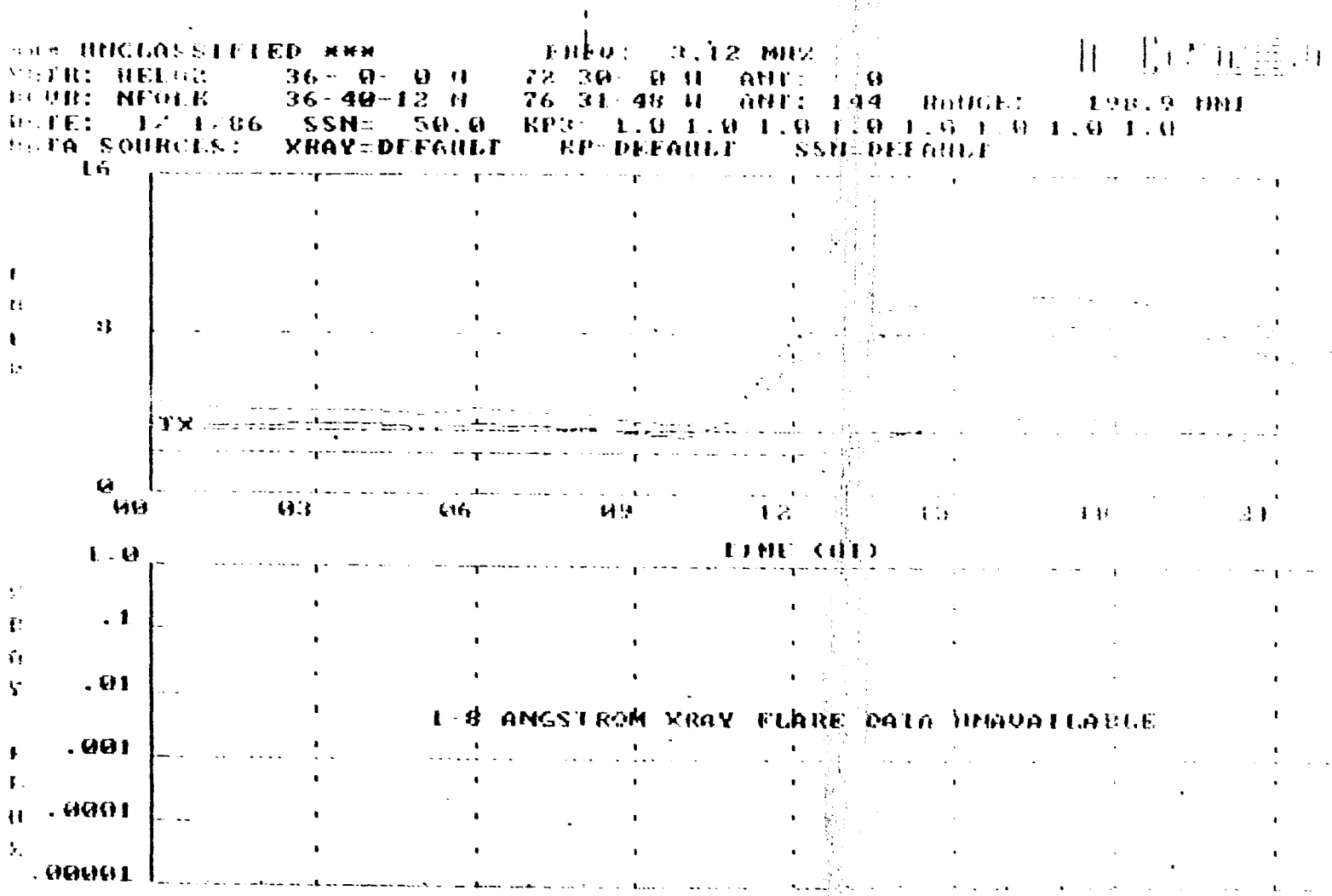
*** UNCLASSIFIED ***
FREQ: 3.12 MHz
TR: HELGE 36- 0- 0 N 72 30- 0 W ANT: 0
RCVR: NFOLK 36-40-12 N 76 31-48 W ANT: 144 RnGE: 198.9 NMI
DATE: 17 1:86 SSN= 50.0 KPS= 1.0 1.0 1.0 1.0 1.0 1.0 1.0 1.0
DATA SOURCES: XRAY=DEFAULT KP=DEFAULT SSN=DEFAULT
16
8
0
TX
00
03
06
09
12
15
18
21
TIME (UT)
1.0
.1
.01
.001
.0001
.00001
1-8 ANGSTROM XRAY FLARE DATA UNAVAILABLE

*** UNCLASSIFIED *** FREQ: 3.12 MHZ
XMTR: HELO4 36- 0- 0 N 76- 0- 0 W ANT: 0
RCVR: NFOLK 36-40-12 N 76-31-48 W ANT: 182 RANGE: 47.4 NMI
DATE: 1/ 1/86 SSN= 50.0 KP3= 1.0 1.0 1.0 1.0 1.0 1.0 1.0 1.0
DATA SOURCES: XRAY=DEFAULT KP=DEFAULT SSN=DEFAULT

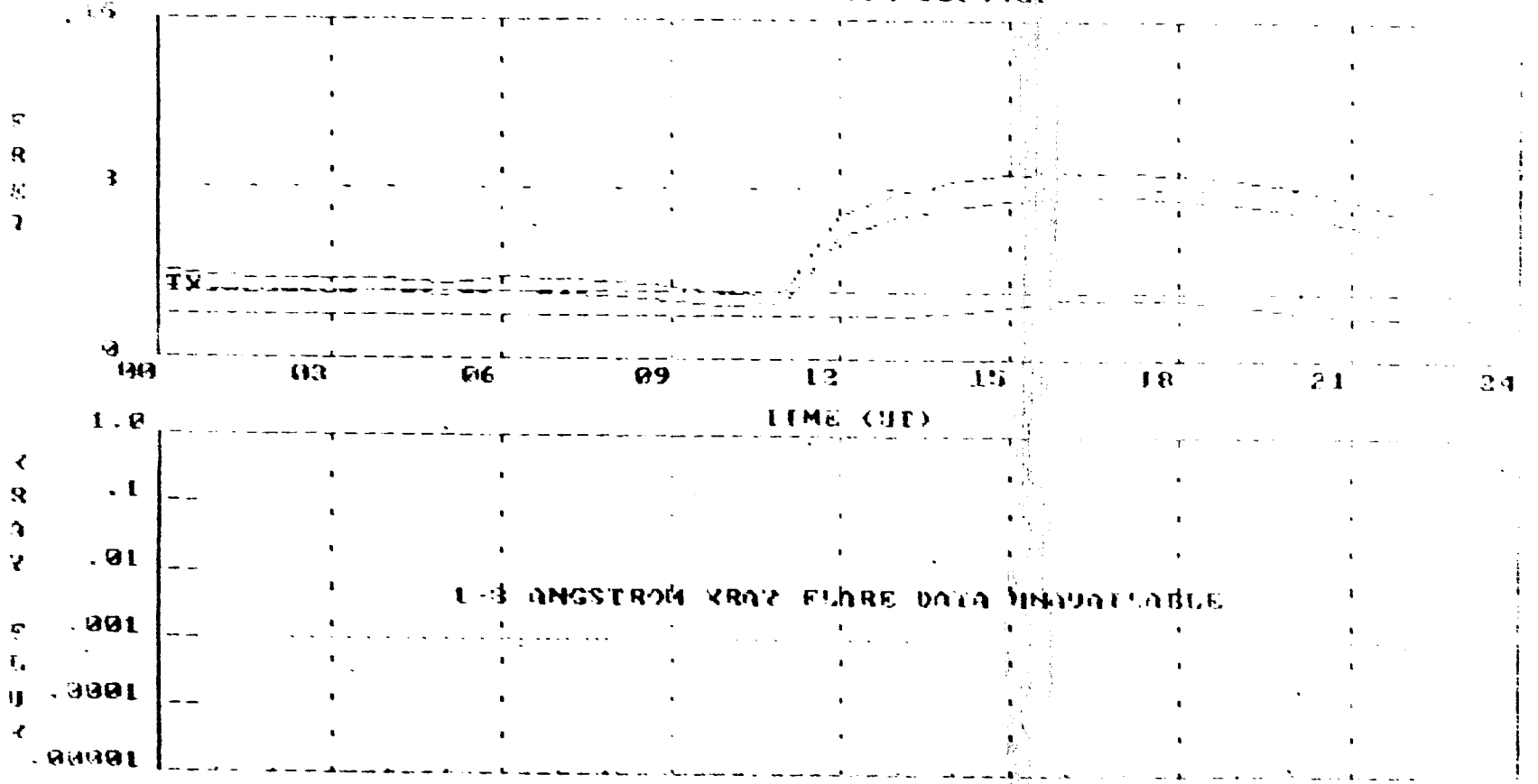

290

*** UNCLASSIFIED ***

[AREA COVERAGE] DATE: 1/ 1/86 TIME: 09:00 UT

TRANSMITTER FREQUENCY: 3.1[illegible] MHZ

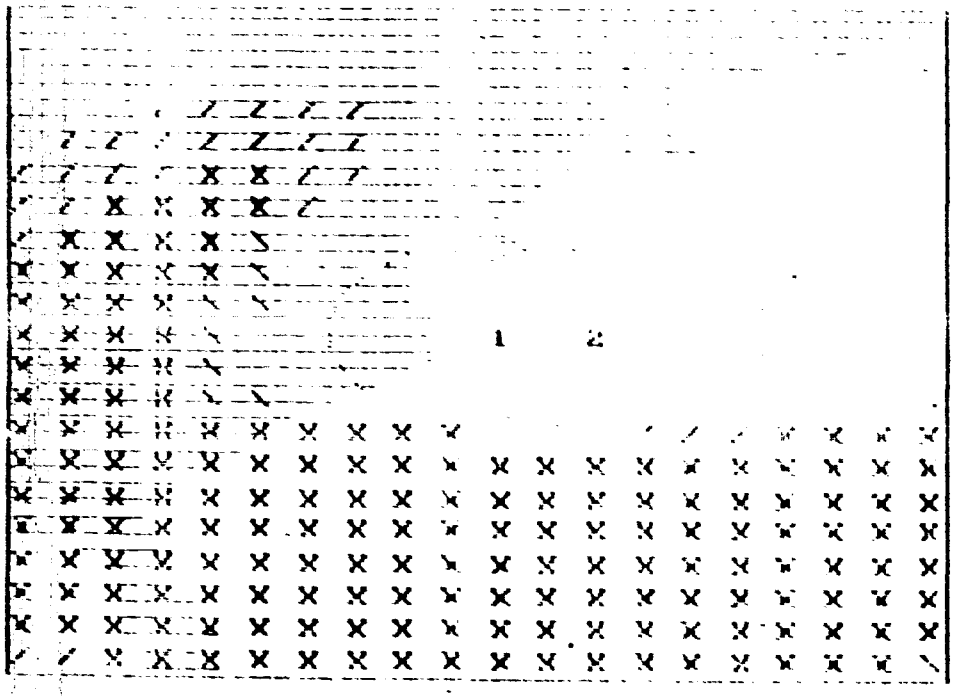

65.0 LON: WEST 65.0

HELO1 (H1) = / HELO2 (H2) = \ BOTH = X GROUNDWAVE = .

PAGE 1

*** UNCLASSIFIED ***

AREA COVERAGE 1 DATE: 1/ 1/86 TIME: 09:00 UT

TRANSMITTER FREQUENCY: 3.12 MHZ

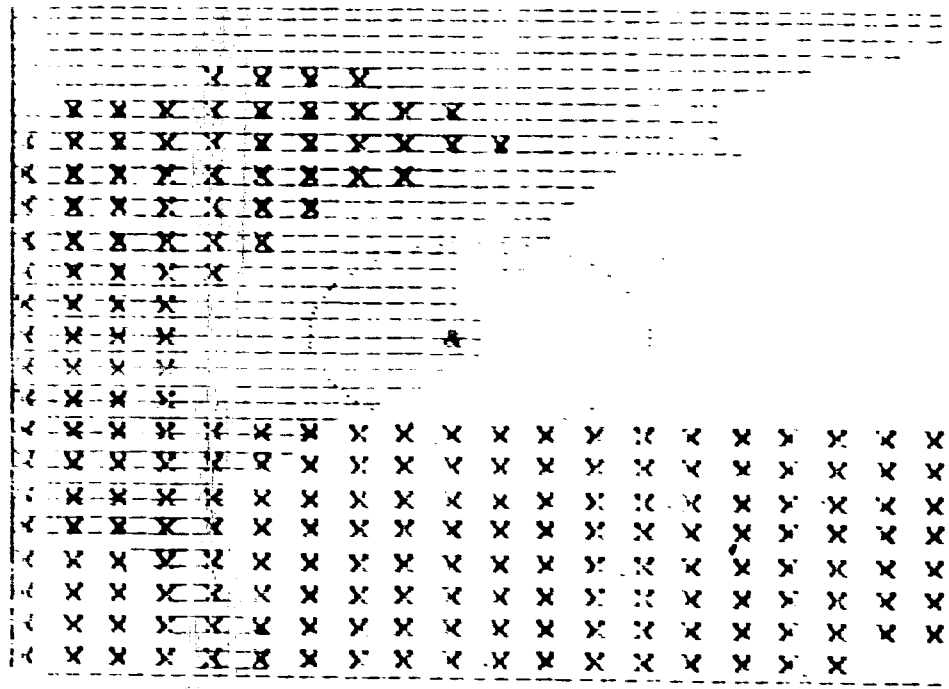

36.0 LON: WEST 66.0

REL.04 (&) COVERAGE = X

GROUNDWAVE

PAGE 1

*** UNCLASSIFIED ***
DATE: 1/ 1/86 TIME: 09:00 UT ATMOSPHERIC NOISE: YES
IND: 3.1 SSN: 50.0 KP: 1.0 MAN MADE NOISE: SR SNR REQD: 13.0 DB
XMTR: HELOI 36- 0- 0 N 74-30- 0 W ANT: 0 @ OMNI PWR: 100.00
RCVR: NEOLK 36-40-12 N 76-31-48 W ANT: 144 @ 1.0 RANGE: 106 0 NMI
IONOSPHERE: FOE= .4 MHZ FOF1= .6 MHZ FOF2= 3.0
HMF2= 350 KM YMF2=100.0 KM

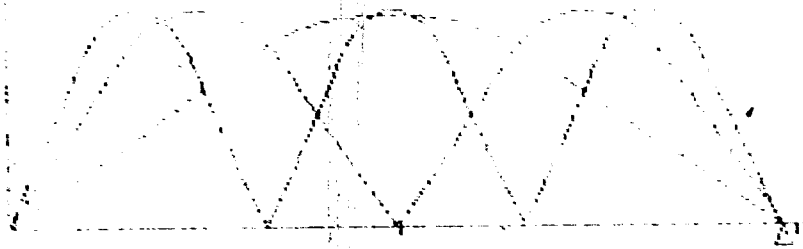

PROPAGATING MODES MAX MODES ALLOWED= 3 EACH DIV= 100 KM

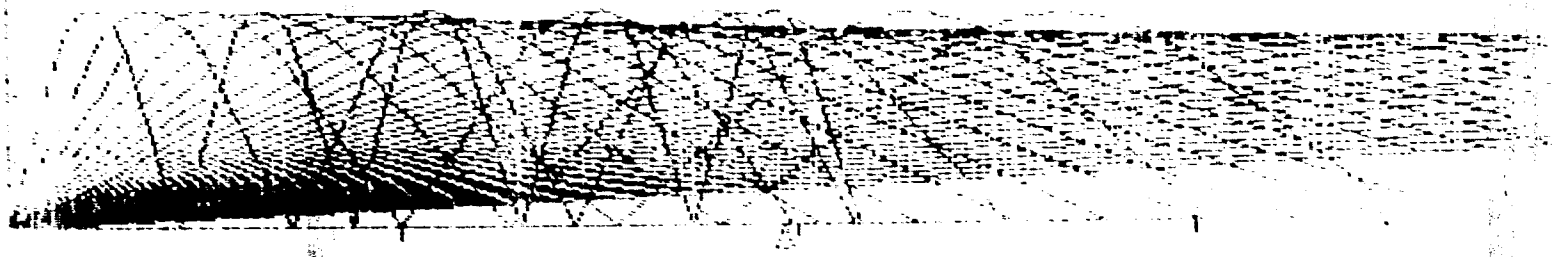

RAYPAH LAUNCH ANGLES: START= 1.00 END= 87.00 INC= 3.00

*** UNCLASSIFIED ***

ADVANCED PROPHET RAYTRACE SYNOPSIS

DATE: 1/ 1/86 TIME: 09:00 UT ATMOSPHERIC NOISE: YES BWIDTH: 2.800 KHZ
FREQ: 3.1 SSN: 50.0 KP: 1.0 MAN-MADE NOISE: SH SNR REQD: 12.0 DB
XMTR: HELO1 36- 0- 0 N 74-30- 0 W ANT: 0 @ *OMNI* PWR: 100.00
RCVR: NFOLK 36-40-12 N 76-31-48 W ANT: 144 @ 1.5 RANGE: 106.0 NMI
IONOSPHERE: FOE= .4 MHZ FOF1= .6 MHZ FOF2= 3.3
HMF2= 350. KM YMF2=100.0 KM

NHOP	1	2	3	0	0	0
MODE	3000000	3300000	3330000	0000000	0000000	0000000
ANGLE	75.70	83.10	85.45	.00	.00	.00
DELAY(MSEC)	2.812	5.792	8.750	.000	.000	.000
LOSS(DB)	100.07	112.90	120.13	.00	.00	.00
GAIN TX/RX	0/-10	0/-10	0/-10	0/ 0	0/ 0	0/ 0
1HZ SNR(DB)	50.58	37.74	30.52	.00	.00	.00
ADJ SNR(DB)	16.11	3.27	-3.95	.00	.00	.00
VIR HT1(KM)	411.06	440.01	447.96	.00	.00	.00
VIR HT2(KM)	.00	427.13	437.91	.00	.00	.00
VIR HT3(KM)	.00	.00	429.47	.00	.00	.00

RA>

* UNCLASSIFIED ***

DATE: 1/ 1/86 TIME: 09:00 UT ATMOSPHERIC NOISE: YES

FREQ: 3.1 SSN: 50.0 GP: 1.0 MAN MADE NOISE: SU SNR REQD: 12.0 DB

MTR: HELO2 36- 0- 0 N 72-30- 0 W ANT: 0 0 *OMNI* PWR: 100.00

DOR: NFOLK 36-40-12 N 76-31-48 W ANT: 144 0 1.5 RANGE: 198.[illegible] NMI

IONOSPHERE: FOE= .4 MHZ FOF1 .6 MHZ FOF2 3.[illegible]

HMF2= 350. KM YMF2=100.0 KM

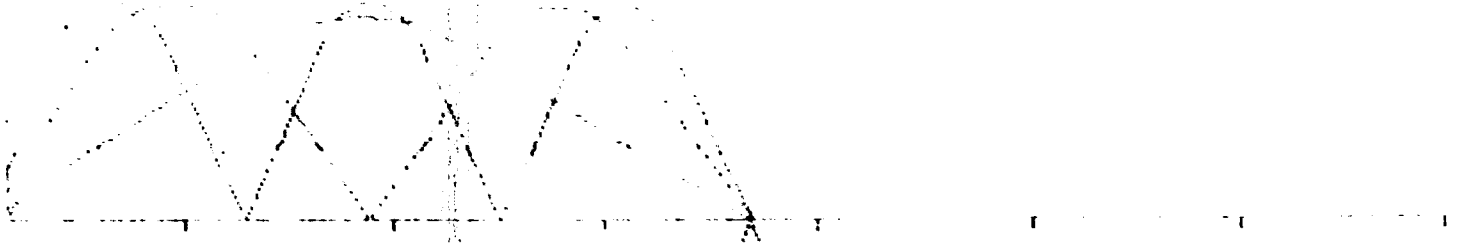

PROPAGATING MODES MAX MODES ALLOWED= 3 EACH TIC= 100 KM

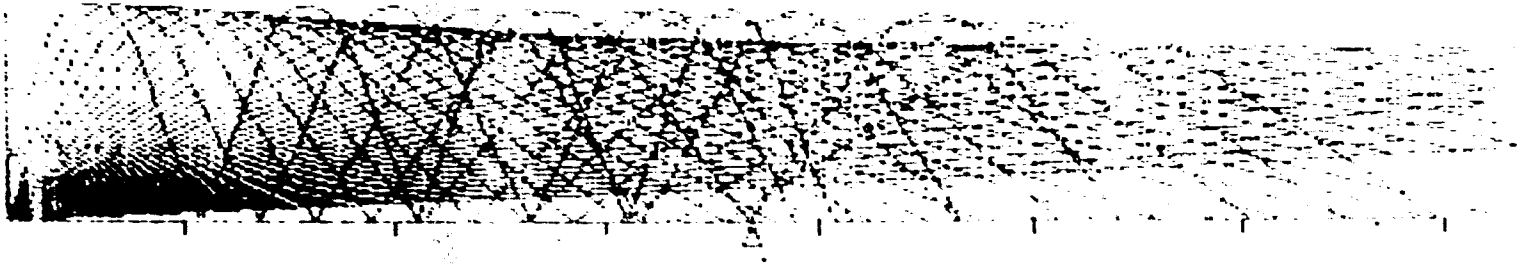

RAYFAN LAUNCH ANGLES: START: 1.00 END= 87.00 INC: 2.00

*** UNCLASSIFIED ***

ADVANCED PROPHET RAYTRACE SYNOPSIS

DATE: 1/ 1/86 TIME: 09:00 UT ATMOSPHERIC NOISE: YES BWIDTH: 2.800 KHZ
FREQ: 3.1 SSN: 50.0 KP: 1.0 MAN-MADE NOISE: SH SNR REQD: 12.0 DB
XMTR: HELO2 36- 0- 0 N 72-30- 0 W ANT: 0 @ *OMNI* PWR: 100.00
RCVR: NFOLK 36-40-12 N 76-31-48 W ANT: 144 @ 1.5 RANGE: 198.9 NMI
IONOSPHERE: FOE= .4 MHZ FOF1= .6 MHZ FOF2= 3.3
HMF2= 350. KM YMF2=100.0 KM

NHOP	1	2	3	0	0	0
MODE	3000000	3300000	3330000	0000000	0000000	0000000
ANGLE	61.85	76.95	81.55	.00	.00	.00
DELAY(MSEC)	2.750	5.787	8.904	.000	.000	.000
LOSS(DB)	99.38	111.88	119.60	.00	.00	.00
GAIN TX/RX	0/-10	0/-10	0/-10	0/ 0	0/ 0	0/ 0
1HZ SNR(DB)	51.27	38.77	31.04	.00	.00	.00
ADJ SNR(DB)	16.80	4.30	-3.43	.00	.00	.00
VIR HT1(KM)	367.20	436.29	463.46	.00	.00	.00
VIR HT2(KM)	.00	414.52	440.88	.00	.00	.00
VIR HT3(KM)	.00	.00	424.89	.00	.00	.00

RA>

*** UNCLASSIFIED ***
DATE: 17 1 86 TIME: 09:00 UT ATMOSPHERIC NOISE: YES
SSN: 50.0 KP: 1.0 MAN-MADE NOISE: SH SNR REQD: 12.0 dB
HELO4 36- 0- 0 N 76- 0- 0 W ANT: 0 @ *OMNI* PWR: 100.00
NFOLK 36-48-12 N 76-31 48 W ANT: 182 @ *OMNI* RANGE: 47.7 NMI
IONOSPHERE: FOE= .4 MHZ FOF1= .6 MHZ FOF2= 3.
HMF2= 350. KM YMF2=100.0 KM

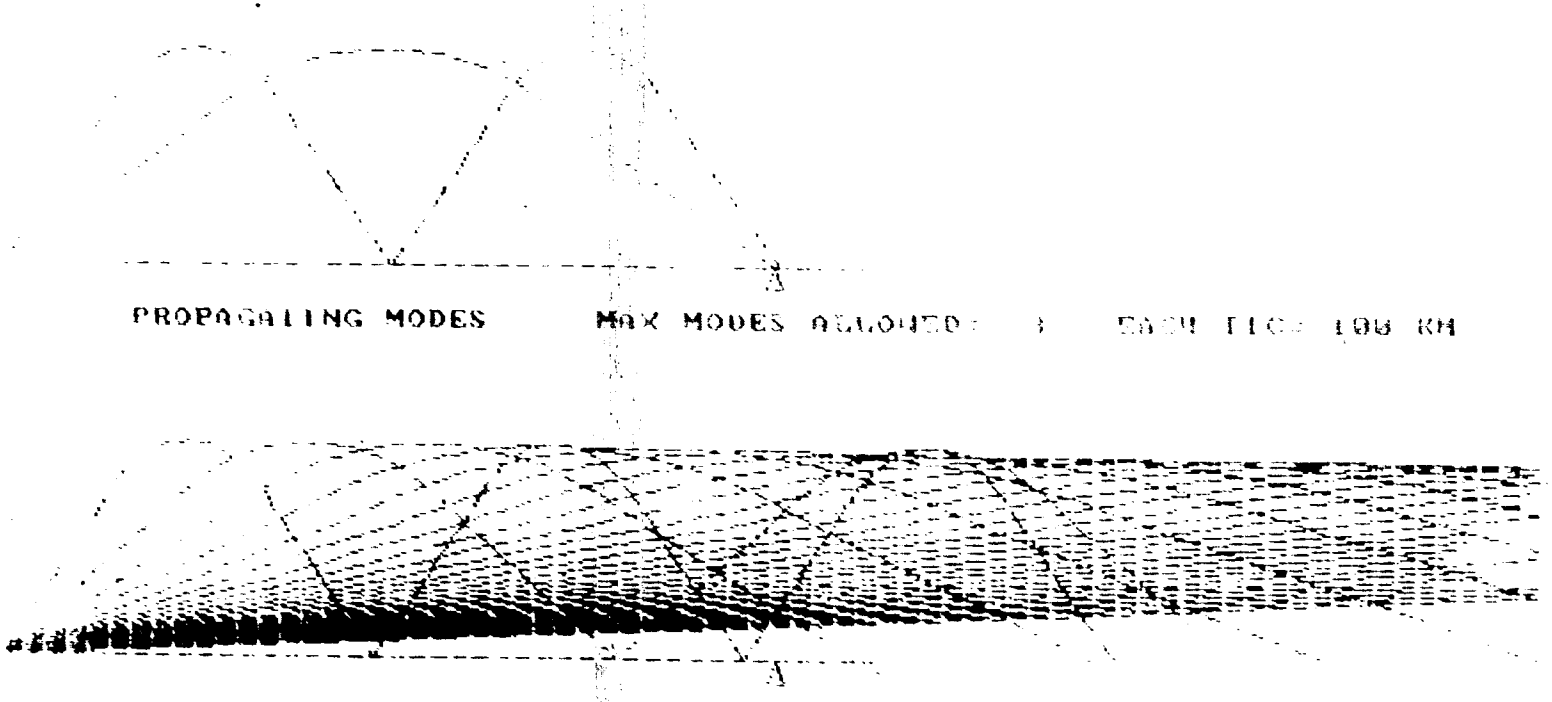

PROPAGATING MODES MAX MODES ALLOWED: 3 EACH TIC= 100 KM

RAYFAN LAUNCH ANGLES: START 1.00 END: 87.00 INC: 2.00

*** UNCLASSIFIED ***

ADVANCED PROPHET RAYTRACE SYNOPSIS

DATE: 1/ 1/86 TIME: 09:00 UT ATMOSPHERIC NOISE: YES BWIDTH: 2.800 KHZ
FREQ: 3.1 SSN: 50.0 KP: 1.0 MAN-MADE NOISE: SH SNR REQD: 12.0 DB
XMTR: HELO4 36- 0- 0 N 76- 0- 0 W ANT: 0 @ *OMNI* PWR: 100.00
RCVR: NFOLK 36-40-12 N 76-31-48 W ANT: 182 @ *OMNI* RANGE: 47.7 NMI
IONOSPHERE: FOE= .4 MHZ FOF1= .6 MHZ FOF2= 3.3
HMF2= 350. KM YMF2=100.0 KM

NHOP	1	2	0	0	0	0
MODE	3000000	3300000	0000000	0000000	0000000	0000000
ANGLE	83.70	86.85	.00	.00	.00	.00
DELAY(MSEC)	2.845	5.726	.000	.000	.000	.000
LOSS(DB)	100.83	112.98	.00	.00	.00	.00
GAIN TX/RX	0/-40	0/-40	0/ 0	0/ 0	0/ 0	0/ 0
1HZ SNR(DB)	19.57	7.42	.00	.00	.00	.00
ADJ SNR(DB)	-14.90	-27.06	.00	.00	.00	.00
VIR HT1(KM)	426.18	432.68	.00	.00	.00	.00
VIR HT2(KM)	.00	429.01	.00	.00	.00	.00
VIR HT3(KM)	.00	.00	.00	.00	.00	.00

RA>

```
*** UNCLASSIFIED ***        DATE: 1/ 1  AT  09:00 UT
   GROUNDWAVE IS FROM HELO1  ON:          3.123 MHZ
    RANGE TO RECEIVER NFOLK  IS:          106.0 NMI
      TRANSMIT GROUNDWAVE GAIN:             .0 dBi
                  POLARIZATION:              V
       TRANSMIT ANTENNA HEIGHT:          500.0 FEET
        RECEIVE ANTENNA HEIGHT:             .0 FEET
            TRANSMITTER POWER:          100.0 WATTS
          REQUIRED BANDWIDTH:             2.8 KHZ
       REQUIRED SIGNAL TO NOISE:          12.0 dB
                       TERRAIN:             SE
                  SURFACE COVER:             //
          SURFACE CONDUCTIVITY:        .40E+01 MHO/M
                   DIELECTRIC:          81.00
                WIND VELOCITY:          25.0 KNOTS
          MANMADE NOISE MODEL:             SH
             ATMOSPHERIC NOISE:            YES
    CALCULATED GROUNDWAVE LOSS:          83.49 dB
                REQUIRED POWER:          9.009 WATTS
              AVAILABLE POWER:         100.000 WATTS
 MAX RANGE FOR POWER OF      100.000 WATTS:       175.7 NMI
 NOTE:  RECEIVE ANTENNA GROUNDWAVE GAIN ASSUMED = 0.0 dBi
GW>
```

```
*** UNCLASSIFIED ***        DATE: 1/ 1  AT  09:00 UT
   GROUNDWAVE IS FROM HELO2  ON:          3.123 MHZ
    RANGE TO RECEIVER NFOLK  IS:          198.9 NMI
      TRANSMIT GROUNDWAVE GAIN:             .0 dBi
                  POLARIZATION:              V
       TRANSMIT ANTENNA HEIGHT:          500.0 FEET
        RECEIVE ANTENNA HEIGHT:             .0 FEET
            TRANSMITTER POWER:          100.0 WATTS
          REQUIRED BANDWIDTH:             2.8 KHZ
      REQUIRED SIGNAL TO NOISE:            12.0 dB
                       TERRAIN:              SE
                 SURFACE COVER:              //
          SURFACE CONDUCTIVITY:         .40E+01 MHO/M
                  DIELECTRIC:            81.00
                WIND VELOCITY:            25.0 KNOTS
           MANMADE NOISE MODEL:              SH
             ATMOSPHERIC NOISE:             YES
    CALCULATED GROUNDWAVE LOSS:          97.03 dB
                REQUIRED POWER:         202.093 WATTS
             AVAILABLE POWER:           100.000 WATTS
 ** SURFACE WAVE PROPAGATION TO RECEIVER NFOLK  UNLIKELY **
 MAX RANGE FOR POWER OF      100.000 WATTS:      176.0 NMI
NOTE:  RECEIVE ANTENNA GROUNDWAVE GAIN ASSUMED = 0.0 dBi
GW>
```

```
*** UNCLASSIFIED ***        DATE: 1/ 1  AT  09:00 UT
   GROUNDWAVE IS FROM HELO3  ON:          3.123 MHZ
    RANGE TO RECEIVER NFOLK  IS:          106.0 NMI
      TRANSMIT GROUNDWAVE GAIN:             .0 dBi
                  POLARIZATION:              H
       TRANSMIT ANTENNA HEIGHT:          500.0 FEET
        RECEIVE ANTENNA HEIGHT:             .0 FEET
             TRANSMITTER POWER:          100.0 WATTS
           REQUIRED BANDWIDTH:             2.8 KHZ
      REQUIRED SIGNAL TO NOISE:            12.0 dB
                       TERRAIN:              SE
                 SURFACE COVER:              //
          SURFACE CONDUCTIVITY:        .40E+01 MHO/M
                    DIELECTRIC:           81.00
                  WIND VELOCITY:            25.0 KNOTS
           MANMADE NOISE MODEL:              SH
            ATMOSPHERIC NOISE:              YES
    CALCULATED GROUNDWAVE LOSS:         192.16 dB
                REQUIRED POWER:        100.000 WATTS
              AVAILABLE POWER:         100.000 WATTS
  ** SURFACE WAVE PROPAGATION TO RECEIVER NFOLK  UNLIKELY **
 SIGNIFICANT IMPROVEMENT MAY BE GAINED WITH VERTICAL POLARIZATION.
  MAX RANGE FOR POWER OF      100.000 WATTS:       10.8 NMI
 NOTE:  RECEIVE ANTENNA GROUNDWAVE GAIN ASSUMED = 0.0 dBi
GW>
```

```
SELECT DISPLAY OPTION ( A/F/P/E )
GW>a
*** UNCLASSIFIED ***        DATE: 1/ 1  AT  09:00 UT
   GROUNDWAVE IS FROM HELO4  ON:          3.123 MHZ
    RANGE TO RECEIVER NFOLK  IS:           47.7 NMI
       TRANSMIT GROUNDWAVE GAIN:            .0 dBi
                   POLARIZATION:             V
        TRANSMIT ANTENNA HEIGHT:         500.0 FEET
         RECEIVE ANTENNA HEIGHT:            .0 FEET
              TRANSMITTER POWER:         100.0 WATTS
           REQUIRED BANDWIDTH:            2.8 KHZ
      REQUIRED SIGNAL TO NOISE:           12.0 dB
                       TERRAIN:             SE
                  SURFACE COVER:             //
            SURFACE CONDUCTIVITY:       .40E+01 MHO/M
                    DIELECTRIC:          81.00
                  WIND VELOCITY:           25.0 KNOTS
           MANMADE NOISE MODEL:             SH
          ATMOSPHERIC NOISE:               YES
    CALCULATED GROUNDWAVE LOSS:         72.76 dB
                REQUIRED POWER:           .766 WATTS
              AVAILABLE POWER:        100.000 WATTS
  MAX RANGE FOR POWER OF      100.000 WATTS:       175.5 NMI
 NOTE:  RECEIVE ANTENNA GROUNDWAVE GAIN ASSUMED = 0.0 dBi
GW>
```

*** UNCLASSIFIED ***
GROUNDWAVE ANALYSIS FOR DATE: 1/ 1/86 TIME: 00:00 GT
XMTR: HELO4 POLARIZATION: V POWER: 100.000 WATTS
RCVR: NFOLK FREQUENCY: 3.123 MHZ RANGE: 12.7 NMI
ANTENNA HEIGHT XMTR: 500.0 FEET RCVR: .0 FEET
TERRAIN: SE COVER: // WIND: 25.0 KNOTS ATMOSPHERIC NOISE: YES
DIELECTRIC: 81.0 SURFACE CONDUCTIVITY: .10E+01 MHO/M
REQD SNR: 12.0 DB BANDWIDTH: 2.800 KHZ MANMADE NOISE: SH

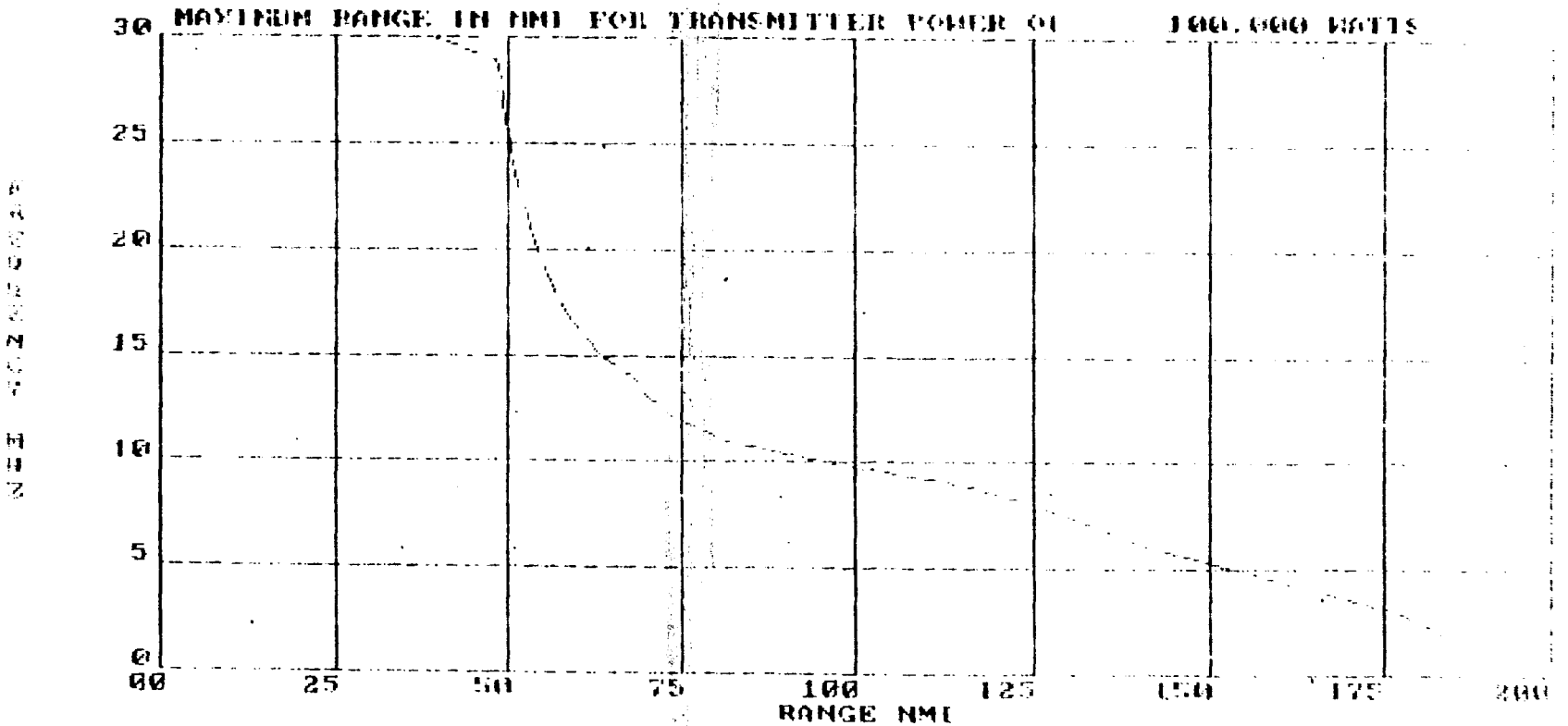

*** UNCLASSIFIED ***
[AREA COVERAGE] DATE: 12/ 1/86 TIME: 09:00 HT

TRANSMITTER FREQUENCY: 5.70 MHZ

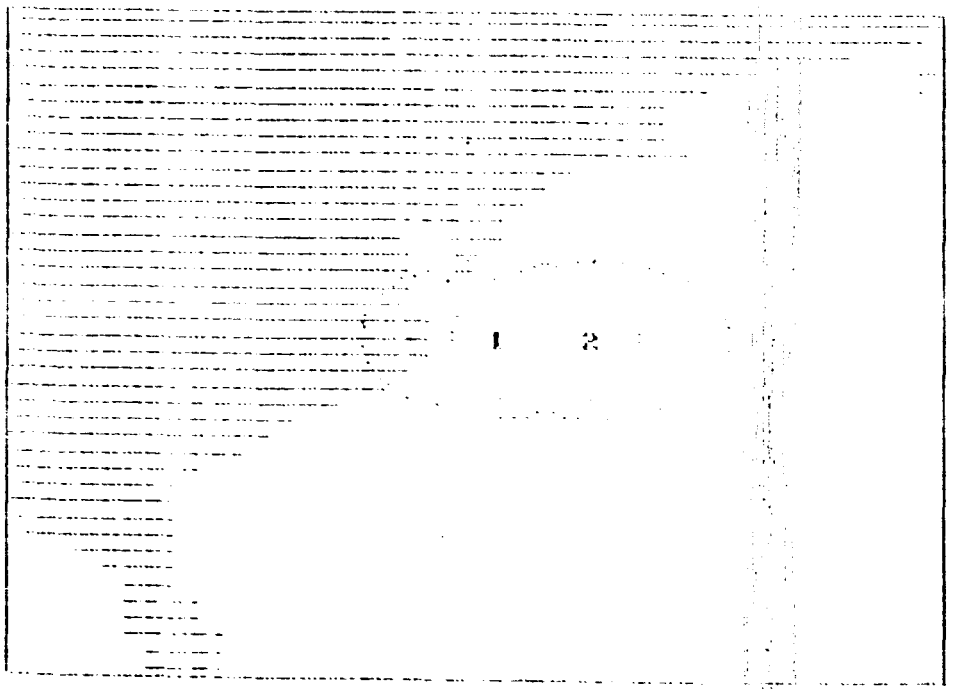

85.0 LON: WEST 65.0

HELO1 (#1) = / HELO2 (#2) = \ BOTH = X GROUNDWAVE= . . . .

303

*** UNCLASSIFIED ***

AREA COVERAGE 1 DATE: 1/ 1/86 TIME: 09:00 UT

TRANSMITTER FREQUENCY: 5.70 MHZ

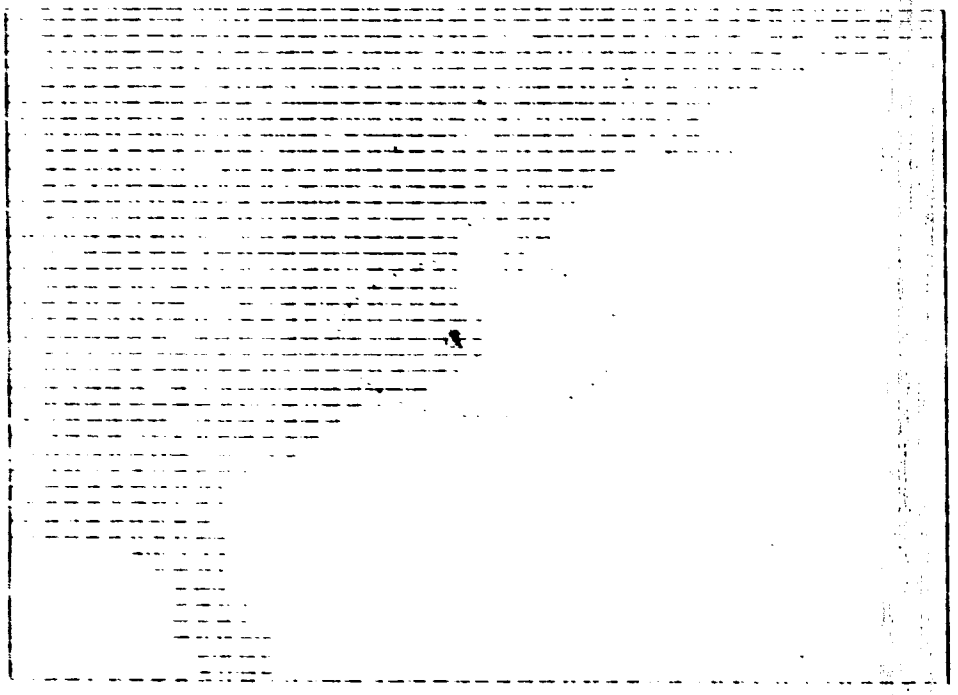

46.0

LAT
NORTH

26.0

66.0

LON: WEST

HELP (&) COVERAGE = X

GROUNDWAVE

PAGE 1

304

*** UNCLASSIFIED ***
DATE: 1/ 1/86 TIME: 09:00 UT ATMOSPHERIC NOISE: YES
SSN: 50.0 KP: 1.0 MAN-MADE NOISE: SU SNR REQD: 12.0 DB
TRMTR: HELOI 36- 0- 0 N 74-30- 0 W ANT: 0 @ *OMNI* PWR: 100.00
RCVR: NFOLK 36-40-12 N 76-31-48 W ANT: 144 @ 1.5 RANGE: 106.0 NMI
IONOSPHERE: FOE= .4 MHZ FOF1= .6 MHZ FOF2= 3.7
HMF2= 350. KM YMF2=100.0 KM

PROPAGATING MODES MAX MODES ALLOWED= 3 EACH I.C= 100 KM

RAYFAN LAUNCH ANGLES: START= 1.00 END= 87.00 INC= 2.00

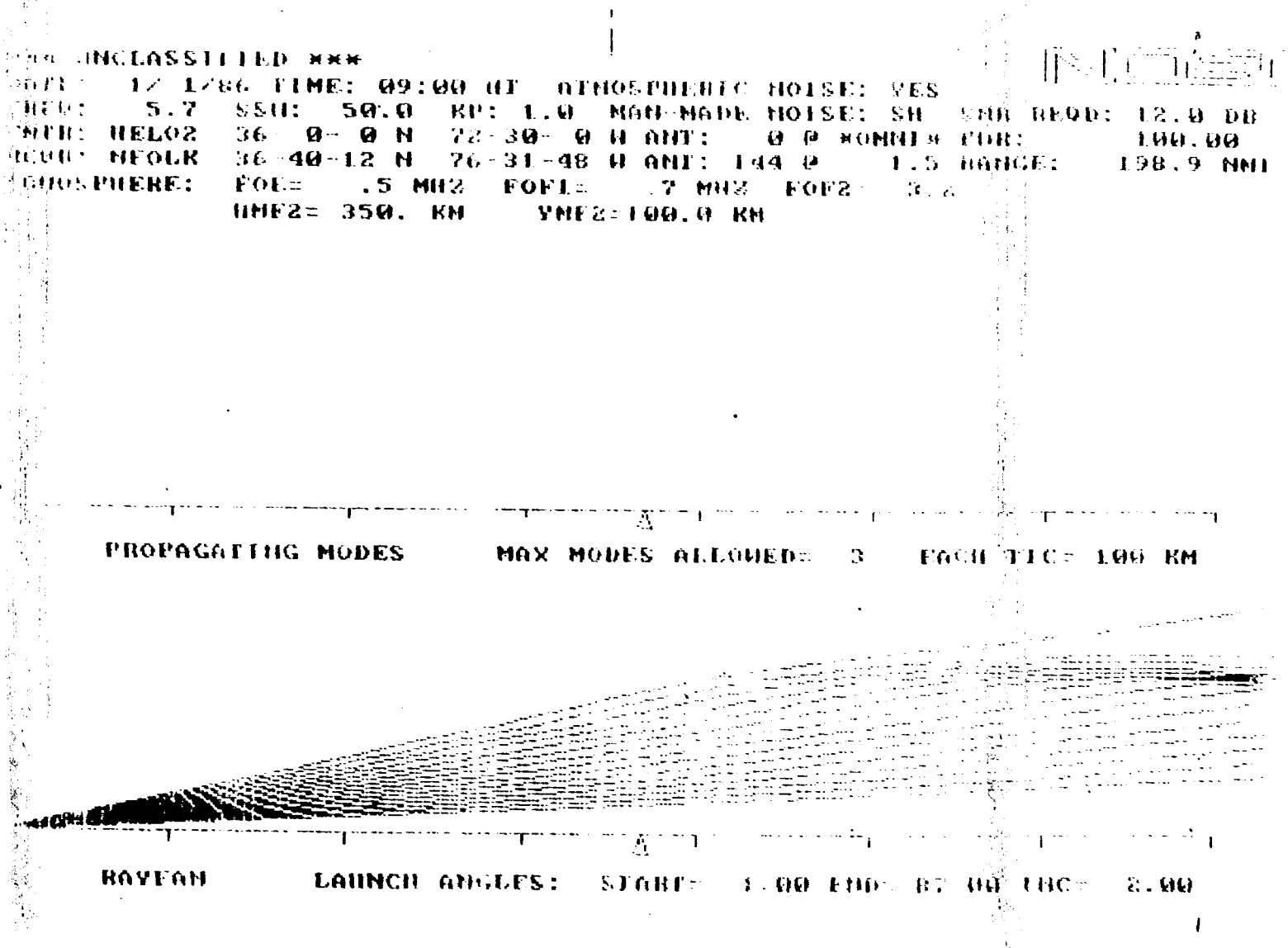
*** UNCLASSIFIED ***
DATE: 17 1/86 TIME: 09:00 UT ATMOSPHERIC NOISE: YES
FREQ: 5.7 SSN: 50.0 KP: 1.0 MAN-MADE NOISE: SH SNR REQD: 12.0 DB
XMTR: NELO2 36 0- 0 N 72-30- 0 W ANT: 0 @ *OMNI* POR: 100.00
RCVR: NFOLK 36-40-12 N 76-31-48 W ANT: 144 @ 1.5 RANGE: 198.9 NMI
IONOSPHERE: FOE= .5 MHZ FOF1= .7 MHZ FOF2= 3.6
HMF2= 350. KM YMF2=100.0 KM
PROPAGATING MODES MAX MODES ALLOWED= 3 EACH TIC= 100 KM
RAYFAN LAUNCH ANGLES: START= 1.00 END= 87.00 INC= 2.00

```
*** UNCLASSIFIED ***
DATE:  1/ 1/86 TIME: 09:00 UT  ATMOSPHERIC NOISE: YES
FREQ:   5.7   SSN:  50.0  KP: 1.0  MAN-MADE NOISE: SH  SNR REQD:  12.0 DB
XMTR: HELO4   36- 0- 0 N  76- 0- 0 W ANT:   0 @ *OMNI* PWR:       100.00
RCVR: NFOLK   36-40-12 N  76-31-48 W ANT: 182 @ *OMNI* RANGE:     17.7 NMI
IONOSPHERE:   FOE=   .4 MHZ  FOF1=   .6 MHZ  FOF2=  3.3
              HMF2= 350. KM    YMF2=100.0 KM
```

PROPAGATING MODES MAX MODES ALLOWED= 3 EACH LIC= 100 KM

RAYFAN LAUNCH ANGLES: START= 1.00 END= 87.00 INC= 2.00

```
*** UNCLASSIFIED ***        DATE: 1/ 1  AT  09:00 UT
   GROUNDWAVE IS FROM HELO1  ON:          5.696 MHZ
    RANGE TO RECEIVER NFOLK  IS:          106.0 NMI
       TRANSMIT GROUNDWAVE GAIN:            .0 dBi
                    POLARIZATION:             V
        TRANSMIT ANTENNA HEIGHT:          500.0 FEET
         RECEIVE ANTENNA HEIGHT:            .0 FEET
              TRANSMITTER POWER:          100.0 WATTS
            REQUIRED BANDWIDTH:             2.8 KHZ
       REQUIRED SIGNAL TO NOISE:            12.0 dB
                        TERRAIN:              SE
                  SURFACE COVER:              //
             SURFACE CONDUCTIVITY:        .40E+01 MHO/M
                     DIELECTRIC:           81.00
                   WIND VELOCITY:            25.0 KNOTS
              MANMADE NOISE MODEL:              SH
               ATMOSPHERIC NOISE:             YES
     CALCULATED GROUNDWAVE LOSS:           93.53 dB
                  REQUIRED POWER:         17.655 WATTS
                 AVAILABLE POWER:         100.000 WATTS
  MAX RANGE FOR POWER OF      100.000 WATTS:       145.5 NMI
 NOTE:  RECEIVE ANTENNA GROUNDWAVE GAIN ASSUMED = 0.0 dBi
GW>
```

```
*** UNCLASSIFIED ***        DATE: 1/ 1  AT  09:00 UT
   GROUNDWAVE IS FROM HELO2  ON:          5.696 MHZ
    RANGE TO RECEIVER NFOLK  IS:          198.9 NMI
       TRANSMIT GROUNDWAVE GAIN:            .0 dBi
                   POLARIZATION:             V
        TRANSMIT ANTENNA HEIGHT:          500.0 FEET
         RECEIVE ANTENNA HEIGHT:            .0 FEET
              TRANSMITTER POWER:          100.0 WATTS
            REQUIRED BANDWIDTH:            2.8 KHZ
       REQUIRED SIGNAL TO NOISE:           12.0 dB
                        TERRAIN:             SE
                  SURFACE COVER:             //
            SURFACE CONDUCTIVITY:        .40E+01 MHO/M
                    DIELECTRIC:           81.00
                  WIND VELOCITY:           25.0 KNOTS
           MANMADE NOISE MODEL:              SH
             ATMOSPHERIC NOISE:             YES
    CALCULATED GROUNDWAVE LOSS:         110.23 dB
                 REQUIRED POWER:        821.762 WATTS
                AVAILABLE POWER:        100.000 WATTS
  ** SURFACE WAVE PROPAGATION TO RECEIVER NFOLK  UNLIKELY **
  MAX RANGE FOR POWER OF      100.000 WATTS:      145.7 NMI
 NOTE:  RECEIVE ANTENNA GROUNDWAVE GAIN ASSUMED = 0.0 dBi
GW>
```

```
SELECT DISPLAY OPTION ( A/F/P/E )
GW>a
*** UNCLASSIFIED ***        DATE: 1/ 1  AT  09:00 UT
   GROUNDWAVE IS FROM HELO4  ON:          5.696 MHZ
    RANGE TO RECEIVER NFOLK  IS:           47.7 NMI
       TRANSMIT GROUNDWAVE GAIN:             .0 dBi
                    POLARIZATION:              V
         TRANSMIT ANTENNA HEIGHT:          500.0 FEET
          RECEIVE ANTENNA HEIGHT:             .0 FEET
               TRANSMITTER POWER:          100.0 WATTS
             REQUIRED BANDWIDTH:             2.8 KHZ
       REQUIRED SIGNAL TO NOISE:            12.0 dB
                        TERRAIN:              SE
                  SURFACE COVER:              //
           SURFACE CONDUCTIVITY:         .40E+01 MHO/M
                    DIELECTRIC:           81.00
                  WIND VELOCITY:            25.0 KNOTS
            MANMADE NOISE MODEL:              SH
              ATMOSPHERIC NOISE:             YES
    CALCULATED GROUNDWAVE LOSS:           79.52 dB
                REQUIRED POWER:            .704 WATTS
              AVAILABLE POWER:          100.000 WATTS
  MAX RANGE FOR POWER OF      100.000 WATTS:       145.4 NMI
 NOTE:  RECEIVE ANTENNA GROUNDWAVE GAIN ASSUMED = 0.0 dBi
GW>
```

*** UNCLASSIFIED ***

(AREA COVERAGE) DATE: 1[illegible]/86 TIME: 18:00 HI

TRANSMITTER FREQUENCY: 3.12 MHZ

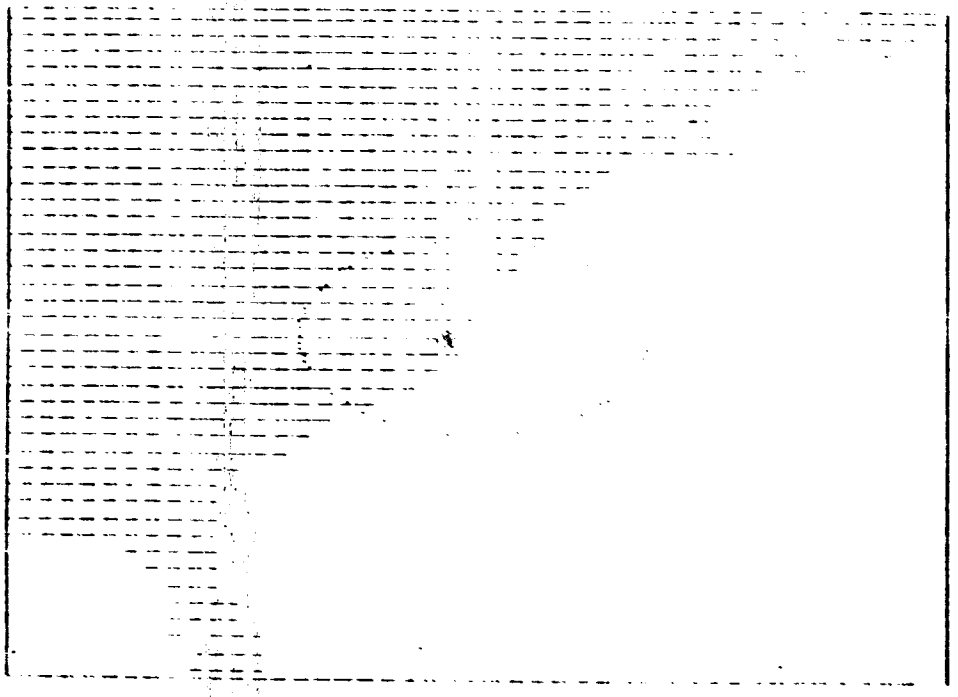

46.0

LAT
NORTH

26.0

86.0 LON: WEST 66.0

HELO4 (&) COVERAGE = X

GROUNDWOOD

PAGE 1

** UNCLASSIFIED ***

DATE: 12/ 1/86 TIME: 18:00 UT ATMOSPHERIC NOISE: YES

REQ: 3.1 SSN: 50.0 KP: 1.0 MAN MADE NOISE: SH SNR REQD: 12.0 DB

TXR: HELO4 36- 0- 0 N 76 0 0 W ANT: 0 @ OMNI @ PWR: 100.00

RCVR: NFOLK 36-10-12 N 75 31 18 W ANT: 192 @ OMNI @ RANGE: 47.7 NMI

IONOSPHERE: FOE= 3.0 MHZ FOF1= 4.3 MHZ FOF2= 8.6

HME2= 341. KM YME2=119.6 KM

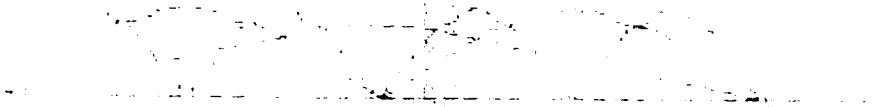

PROPAGATING MODES MAX MODES ALLOWED= 3 RANGE INC= 104 KM

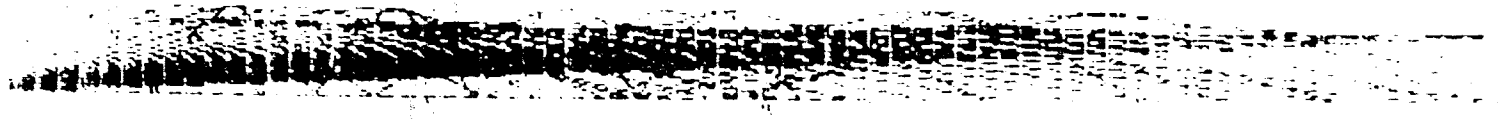

RAYFAN LAUNCH ANGLES: START 1.00 END 87.00 INC= 1.00

*** UNCLASSIFIED ***

ADVANCED PROPHET RAYTRACE SYNOPSIS

DATE: 1/ 1/86 TIME: 18:00 UT ATMOSPHERIC NOISE: YES BWIDTH: 2.800 KHZ
FREQ: 3.1 SSN: 50.0 KP: 1.0 MAN-MADE NOISE: SH SNR REQD: 12.0 DB
XMTR: HELO4 36- 0- 0 N 76- 0- 0 W ANT: 0 @ *OMNI* PWR: 100.00
RCVR: NFOLK 36-40-12 N 76-31-48 W ANT: 182 @ *OMNI* RANGE: 47.7 NMI
IONOSPHERE: FOE= 3.0 MHZ FOF1= 4.2 MHZ FOF2= 8.6
HMF2= 341. KM YMF2=119.6 KM

NHOP	1	2	4	0	0	0
MODE	1000000	2200000	2222000	0000000	0000000	0000000
ANGLE	69.50	82.85	86.40	.00	.00	.00
DELAY(MSEC)	.856	2.436	4.816	.000	.000	.000
LOSS(DB)	133.60	189.60	271.87	.00	.00	.00
GAIN TX/RX	0/-18	0/-40	0/-40	0/ 0	0/ 0	0/ 0
1HZ SNR(DB)	9.30	-68.70	EXCESSIVE	.00	.00	.00
ADJ SNR(DB)	-25.17	-103.17	EXCESSIVE	.00	.00	.00
VIR HT1(KM)	120.40	182.03	180.95	.00	.00	.00
VIR HT2(KM)	.00	181.47	180.74	.00	.00	.00
VIR HT3(KM)	.00	.00	180.55	.00	.00	.00

RA>

```
SELECT DISPLAY OPTION ( A/F/P/E )
GW>a
*** UNCLASSIFIED ***        DATE: 1/ 1  AT  18:00 UT
   GROUNDWAVE IS FROM HELO4  ON:          3.123 MHZ
    RANGE TO RECEIVER NFOLK  IS:           47.7 NMI
       TRANSMIT GROUNDWAVE GAIN:             .0 dBi
                   POLARIZATION:              V
        TRANSMIT ANTENNA HEIGHT:          500.0 FEET
         RECEIVE ANTENNA HEIGHT:             .0 FEET
              TRANSMITTER POWER:          100.0 WATTS
            REQUIRED BANDWIDTH:            2.8 KHZ
      REQUIRED SIGNAL TO NOISE:           12.0 dB
                       TERRAIN:             SE
                  SURFACE COVER:             //
           SURFACE CONDUCTIVITY:        .40E+01 MHO/M
                    DIELECTRIC:          81.00
                  WIND VELOCITY:           25.0 KNOTS
            MANMADE NOISE MODEL:             SH
              ATMOSPHERIC NOISE:            YES
    CALCULATED GROUNDWAVE LOSS:          72.76 dB
                REQUIRED POWER:           .681 WATTS
               AVAILABLE POWER:        100.000 WATTS
  MAX RANGE FOR POWER OF      100.000 WATTS:      179.3 NMI
 NOTE:  RECEIVE ANTENNA GROUNDWAVE GAIN ASSUMED = 0.0 dBi
GW>
```

*** UNCLASSIFIED ***

[AREA COVERAGE] DATE: 1/ 1/86 TIME: 18:00 UT

TRANSMITTER FREQUENCY: 5.70 MHZ

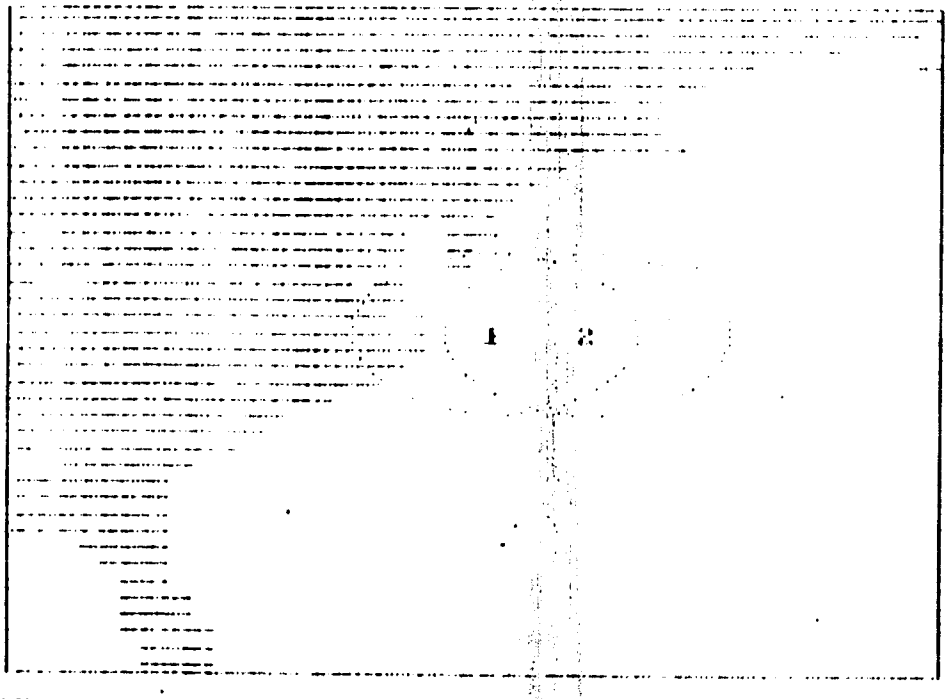

HELO1 (#1)= / HELO2 (#2)= \ BOTH = X GROUNDWAVE= . . . . .

*** UNCLASSIFIED ***

[AREA COVERAGE] DATE: 1/ 1/86 TIME: 18:00 GT

TRANSMITTER FREQUENCY: 5.70 MHZ

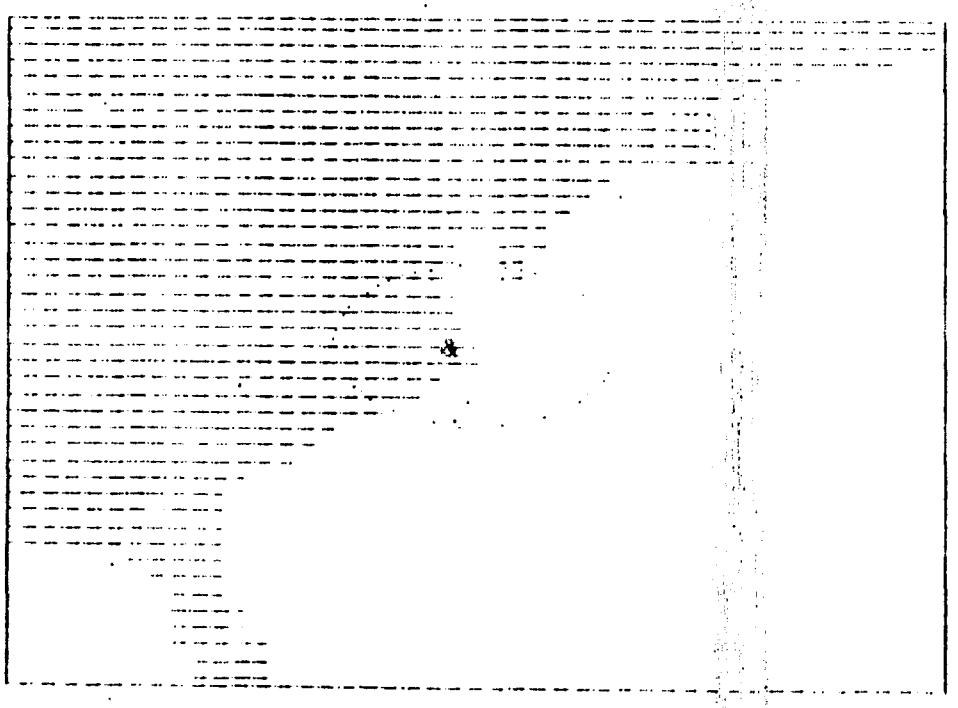

46.0

LAT:
NORTH

26.0

86.0 LON: WEST 66.0

HELO4 (&) COVERAGE = X

GROUNDWAVE: . . . . .

PAGE 1

*** UNCLASSIFIED ***

DATE: 1/ 1/86 TIME: 18:00 UT ATMOSPHERIC NOISE: YES

SFI: 5.7 SSN: 50.0 KP: 1.0 MAN-MADE NOISE: SU SNR REQD: 12.0 DB

XMTR: HELO1 36- 0- 0 N 74-30- 0 W ANT: 0 @ OMNI PWR: 100.00

RCVR: NFOLK . 36-40-12 N 76-31-48 W AND: 144 @ 1.5 RANGE: 106.0 NMI

IONOSPHERE: FOE= 3.0 MHZ FOF1= 4.2 MHZ FOF2= 8.6

HMF2= 341. KM YMF2=119.5 KM

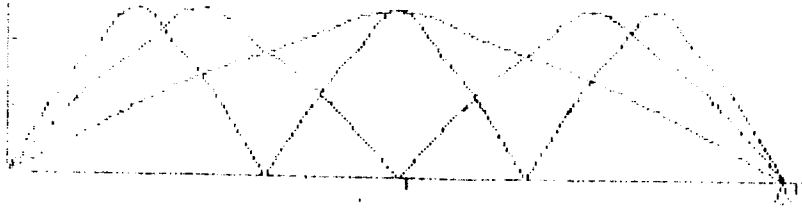

PROPAGATING MODES MAX MODES ALLOWED= 3 EACH FIC= 100 KM

RAYFAN LAUNCH ANGLES: START= 1.00 END= 17.00 INC= 2.00

*** UNCLASSIFIED ***

ADVANCED PROPHET RAYTRACE SYNOPSIS

DATE: 1/ 1/86 TIME: 18:00 UT ATMOSPHERIC NOISE: YES BWIDTH: 2.800 KHZ
FREQ: 5.7 SSN: 50.0 KP: 1.0 MAN-MADE NOISE: SH SNR REQD: 12.0 DB
XMTR: HELO1 36- 0- 0 N 74-30- 0 W ANT: 0 @ *OMNI* PWR: 100.00
RCVR: NFOLK 36-40-12 N 76-31-48 W ANT: 144 @ 1.5 RANGE: 106.0 NMI
IONOSPHERE: FOE= 3.0 MHZ FOF1= 4.2 MHZ FOF2= 8.6
HMF2= 341. KM YMF2=119.5 KM

NHOP	1	2	3	0	0	0
MODE	3000000	3300000	3330000	0000000	0000000	0000000
ANGLE	72.40	80.95	83.95	.00	.00	.00
DELAY(MSEC)	2.262	4.368	6.511	.000	.000	.000
LOSS(DB)	121.19	147.74	170.09	.00	.00	.00
GAIN TX/RX	0/-11	0/-13	0/-13	0/ 0	0/ 0	0/ 0
1HZ SNR(DB)	36.18	7.64	-14.72	.00	.00	.00
ADJ SNR(DB)	1.71	-26.83	-49.19	.00	.00	.00
VIR HT1(KM)	326.01	325.04	324.96	.00	.00	.00
VIR HT2(KM)	.00	325.75	325.43	.00	.00	.00
VIR HT3(KM)	.00	.00	325.91	.00	.00	.00

RA>

*** UNCLASSIFIED ***

DATE: 1/ 1/86 TIME: 18:00 UT ATMOSPHERIC NOISE: YES

FREQ: 5.7 SSN: 50.0 KP: 1.0 MAN-MADE NOISE: SH SNR REQD: 12.0 DB

XMTR: HELO2 36- 0- 0 N 72-30- 0 W ANT: 0 @ *OMNI* PWR: 100.00

RCVR: NFOLK 36-40-12 N 76-31-48 W ANT: 144 @ 1.5 RANGE: 198.9 NMI

IONOSPHERE: FOE= 3.0 MHZ FOF1= 4.2 MHZ FOF2= 8.6

HMF2= 342. KM YMF2=119.5 KM

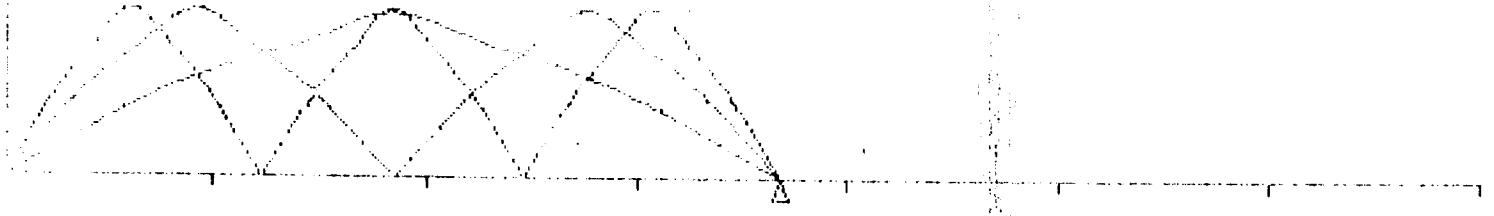

PROPAGATING MODES MAX MODES ALLOWED= 3 EACH TIC= 100 KM

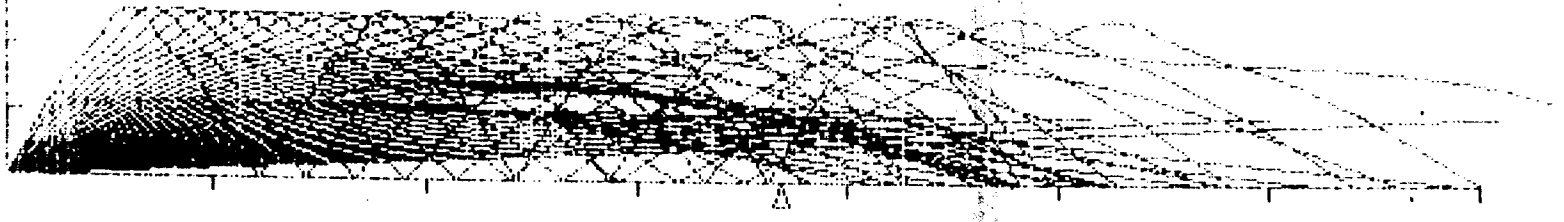

RAYFAN LAUNCH ANGLES: START= 1.00 END= 87.00 INC= 2.00

*** UNCLASSIFIED ***

ADVANCED PROPHET RAYTRACE SYNOPSIS

DATE: 1/ 1/86 TIME: 18:00 UT ATMOSPHERIC NOISE: YES BWIDTH: 2.800 KHZ
FREQ: 5.7 SSN: 50.0 KP: 1.0 MAN-MADE NOISE: SH SNR REQD: 12.0 DB
XMTR: HELO2 36- 0- 0 N 72-30- 0 W ANT: 0 @ *OMNI* PWR: 100.00
RCVR: NFOLK 36-40-12 N 76-31-48 W ANT: 144 @ 1.5 RANGE: 198.9 NMI
IONOSPHERE: FOE= 3.0 MHZ FOF1= 4.2 MHZ FOF2= 8.6
HMF2= 342. KM YMF2=119.5 KM

NHOP	1	2	3	0	0	0
MODE	3000000	3300000	3330000	0000000	0000000	0000000
ANGLE	59.85	73.45	78.80	.00	.00	.00
DELAY(MSEC)	2.556	4.505	6.605	.000	.000	.000
LOSS(DB)	125.32	148.93	170.71	.00	.00	.00
GAIN TX/RX	0/ -8	0/-11	0/-11	0/ 0	0/ 0	0/ 0
1HZ SNR(DB)	35.06	8.44	-13.34	.00	.00	.00
ADJ SNR(DB)	.59	-26.03	-47.81	.00	.00	.00
VIR HT1(KM)	336.82	326.25	325.87	.00	.00	.00
VIR HT2(KM)	.00	326.41	325.96	.00	.00	.00
VIR HT3(KM)	.00	.00	326.06	.00	.00	.00

RA>

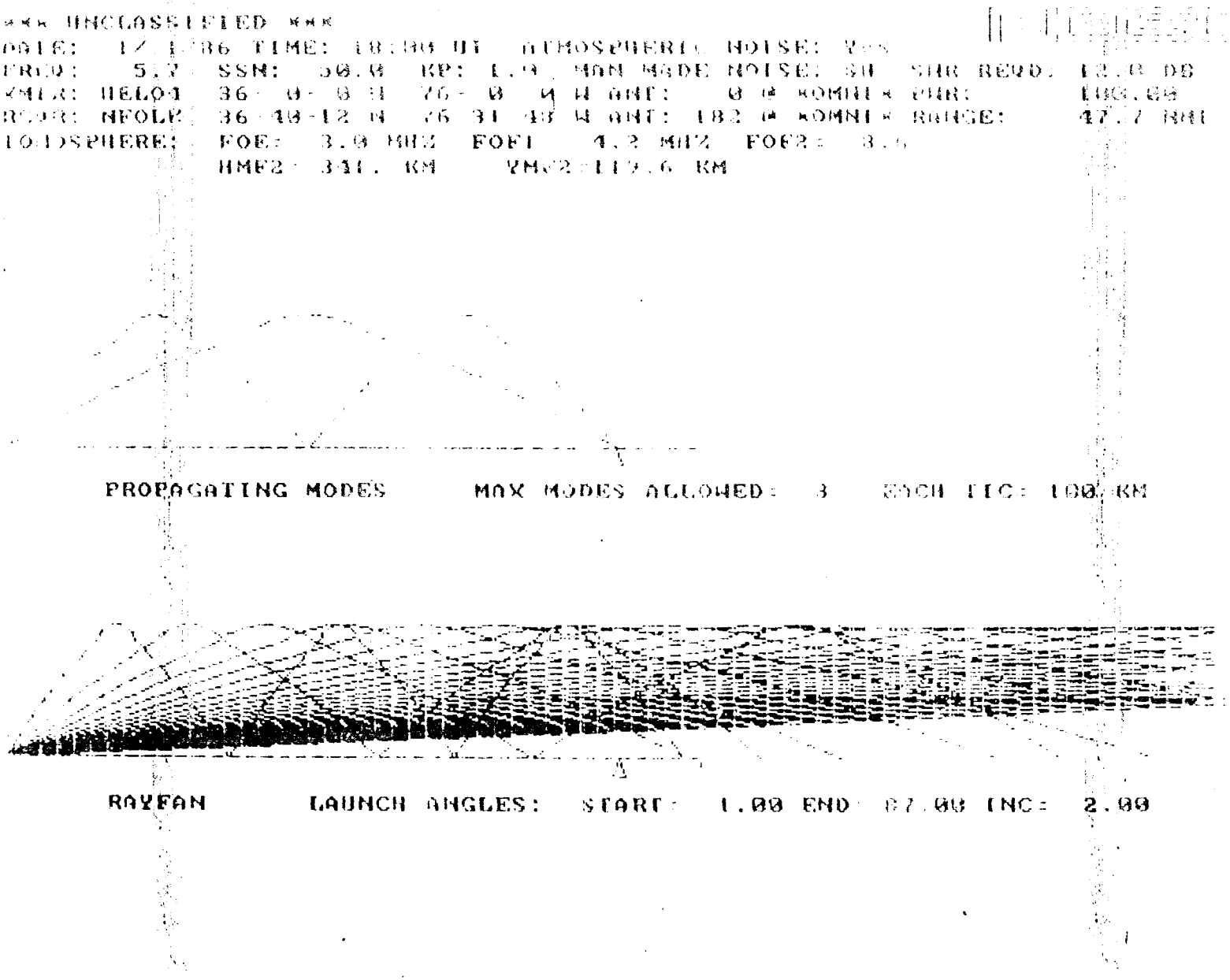
*** UNCLASSIFIED ***
DATE: 1/ 1/86 TIME: 18:30 UT ATMOSPHERIC NOISE: Yes
FREQ: 5.7 SSN: 50.0 KP: 1.0 MAN MADE NOISE: 58 SNR REQD: 13.0 DB
XMTR: HELO1 36 0 0.0 N 76 0 0.0 W ANT: 0 @ *OMNI* GAIN: 106.00
RCVR: NFOLK 36 48 12.0 N 76 31 48.0 W ANT: 182 @ *OMNI* RANGE: 47.7 KM
IONOSPHERE: FOE: 3.0 MHZ FOF1 4.2 MHZ FOF2: 5.6
HMF2: 341. KM VMF2: 119.6 KM
PROPAGATING MODES MAX MODES ALLOWED: 3 EACH FIC: 100 KM
RAYFAN LAUNCH ANGLES: START: 1.00 END: 87.00 INC: 2.00

*** UNCLASSIFIED ***

ADVANCED PROPHET RAYTRACE SYNOPSIS

DATE: 1/ 1/86 TIME: 18:00 UT ATMOSPHERIC NOISE: YES BWIDTH: 2.800 KHZ
FREQ: 5.7 SSN: 50.0 KP: 1.0 MAN-MADE NOISE: SH SNR REQD: 12.0 DB
XMTR: HELO4 36- 0- 0 N 76- 0- 0 W ANT: 0 @ *OMNI* PWR: 100.00
RCVR: NFOLK 36-40-12 N 76-31-48 W ANT: 182 @ *OMNI* RANGE: 47.7 NMI
IONOSPHERE: FOE= 3.0 MHZ FOF1= 4.2 MHZ FOF2= 8.6
HMF2= 341. KM YMF2=119.6 KM

NHOP	1	2	0	0	0	0
MODE	3000000	3300000	0000000	0000000	0000000	0000000
ANGLE	81.85	85.90	.00	.00	.00	.00
DELAY(MSEC)	2.177	4.323	.000	.000	.000	.000
LOSS(DB)	119.85	147.35	.00	.00	.00	.00
GAIN TX/RX	0/-40	0/-40	0/ 0	0/ 0	0/ 0	0/ 0
1HZ SNR(DB)	8.28	-19.23	.00	.00	.00	.00
ADJ SNR(DB)	-26.19	-53.70	.00	.00	.00	.00
VIR HT1(KM)	325.02	324.51	.00	.00	.00	.00
VIR HT2(KM)	.00	325.63	.00	.00	.00	.00
VIR HT3(KM)	.00	.00	.00	.00	.00	.00

RA>

```
*** UNCLASSIFIED ***        DATE: 1/ 1  AT  18:00 UT
   GROUNDWAVE IS FROM HELO1  ON:          5.696 MHZ
    RANGE TO RECEIVER NFOLK  IS:          106.0 NMI
      TRANSMIT GROUNDWAVE GAIN:             .0 dBi
                  POLARIZATION:              V
       TRANSMIT ANTENNA HEIGHT:          500.0 FEET
        RECEIVE ANTENNA HEIGHT:             .0 FEET
            TRANSMITTER POWER:          100.0 WATTS
          REQUIRED BANDWIDTH:             2.8 KHZ
       REQUIRED SIGNAL TO NOISE:          12.0 dB
                     TERRAIN:               SE
                SURFACE COVER:               //
           SURFACE CONDUCTIVITY:        .40E+01 MHO/M
                  DIELECTRIC:           81.00
               WIND VELOCITY:           25.0 KNOTS
          MANMADE NOISE MODEL:               SH
            ATMOSPHERIC NOISE:              YES
    CALCULATED GROUNDWAVE LOSS:          93.53 dB
               REQUIRED POWER:         15.392 WATTS
              AVAILABLE POWER:        100.000 WATTS
  MAX RANGE FOR POWER OF      100.000 WATTS:      148.8 NMI
 NOTE:  RECEIVE ANTENNA GROUNDWAVE GAIN ASSUMED = 0.0 dBi
GW>
```

```
*** UNCLASSIFIED ***        DATE: 1/ 1  AT  18:00 UT
   GROUNDWAVE IS FROM HELO2  ON:          5.696 MHZ
     RANGE TO RECEIVER NFOLK  IS:         198.9 NMI
        TRANSMIT GROUNDWAVE GAIN:           .0 dBi
                    POLARIZATION:            V
         TRANSMIT ANTENNA HEIGHT:        500.0 FEET
          RECEIVE ANTENNA HEIGHT:           .0 FEET
               TRANSMITTER POWER:        100.0 WATTS
             REQUIRED BANDWIDTH:           2.8 KHZ
       REQUIRED SIGNAL TO NOISE:          12.0 dB
                        TERRAIN:            SE
                  SURFACE COVER:            //
          SURFACE CONDUCTIVITY:        .40E+01 MHO/M
                   DIELECTRIC:          81.00
                 WIND VELOCITY:          25.0 KNOTS
           MANMADE NOISE MODEL:            SH
             ATMOSPHERIC NOISE:           YES
    CALCULATED GROUNDWAVE LOSS:        110.23 dB
                REQUIRED POWER:       721.029 WATTS
              AVAILABLE POWER:        100.000 WATTS
  ** SURFACE WAVE PROPAGATION TO RECEIVER NFOLK  UNLIKELY **
  MAX RANGE FOR POWER OF      100.000 WATTS:      148.8 NMI
 NOTE:  RECEIVE ANTENNA GROUNDWAVE GAIN ASSUMED = 0.0 dBi
GW>
```

```
SELECT DISPLAY OPTION ( A/F/P/E )
GW>a
*** UNCLASSIFIED ***        DATE: 1/ 1  AT  18:00 UT
   GROUNDWAVE IS FROM HELO4  ON:          5.696 MHZ
    RANGE TO RECEIVER NFOLK  IS:           47.7 NMI
       TRANSMIT GROUNDWAVE GAIN:            .0 dBi
                   POLARIZATION:             V
        TRANSMIT ANTENNA HEIGHT:          500.0 FEET
         RECEIVE ANTENNA HEIGHT:            .0 FEET
              TRANSMITTER POWER:          100.0 WATTS
            REQUIRED BANDWIDTH:            2.8 KHZ
      REQUIRED SIGNAL TO NOISE:           12.0 dB
                       TERRAIN:             SE
                  SURFACE COVER:             //
           SURFACE CONDUCTIVITY:        .40E+01 MHO/M
                    DIELECTRIC:          81.00
                  WIND VELOCITY:           25.0 KNOTS
            MANMADE NOISE MODEL:             SH
              ATMOSPHERIC NOISE:            YES
    CALCULATED GROUNDWAVE LOSS:          79.52 dB
                REQUIRED POWER:           .611 WATTS
               AVAILABLE POWER:        100.000 WATTS
  MAX RANGE FOR POWER OF      100.000 WATTS:       148.8 NMI
 NOTE:  RECEIVE ANTENNA GROUNDWAVE GAIN ASSUMED = 0.0 dBi
GW>
```

*** UNCLASSIFIED ***
GROUNDWAVE ANALYSIS FOR DATE: 1/ 1/86 TIME: 18:00 UT
XMTR: HELO4 POLARIZATION: V POWER: 100.000 WATTS
RCVR: NFOLK FREQUENCY: 5.696 MHZ RANGE: 47.7 NMI
ANTENNA HEIGHT XMTR: 500.0 FEET RCVR: .0 FEET
TERRAIN: SE COVER: // WIND: 25.0 KNOTS ATMOSPHERIC NOISE: YES
DIELECTRIC: 81.0 SURFACE CONDUCTIVITY: .40E+01 MHO/M
REQD SNR: 12.0 dB BANDWIDTH: 2.800 KHZ MANMADE NOISE: SH

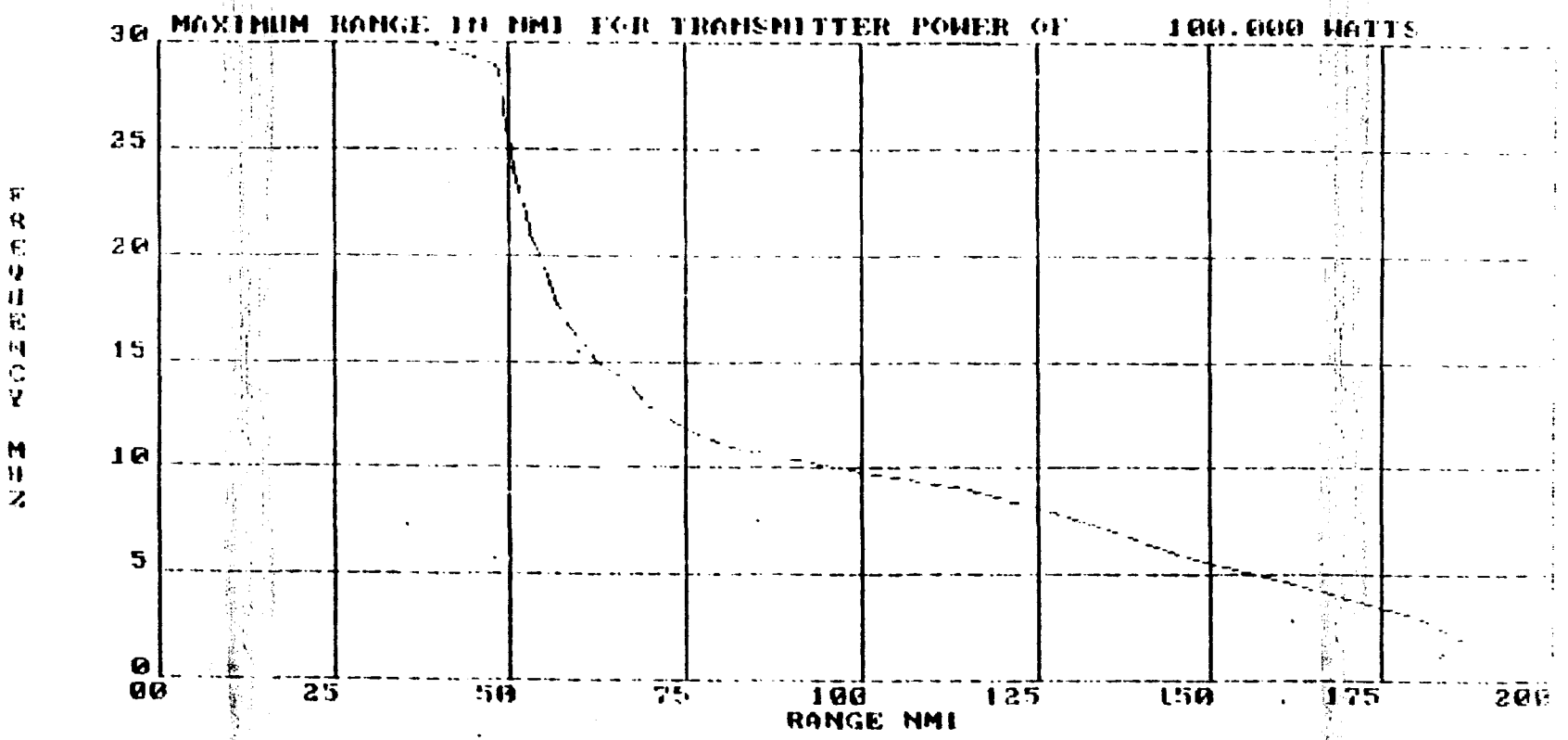

*** UNCLASSIFIED ***

(AREA COVERAGE) DATE: 12 12 86 TIME: 18:00 HT

TRANSMITTER FREQUENCY: 8.98 MHZ

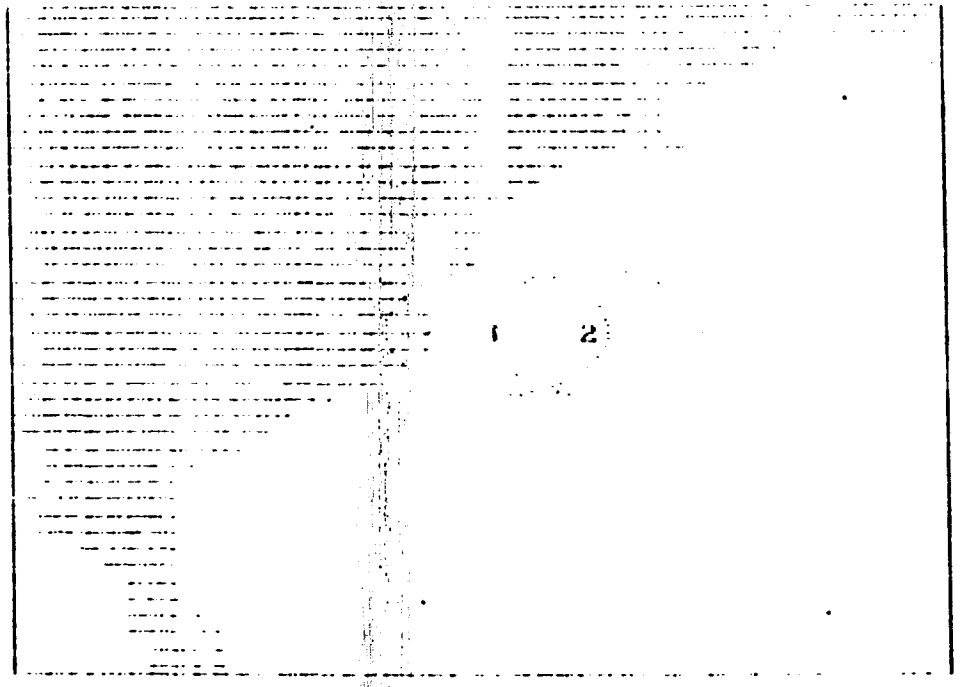

85.0 LON: WEST 65.0

HELO1 (M1): X HELO2 (M2): . BOTH X GROUNDWAVE: . . . .

PAGE 1

*** UNCLASSIFIED ***

(AREA COVERAGE) DATE: 1/ 1/86 TIME: 18:00 UT

TRANSMITTER FREQUENCY: 8.98 MHZ

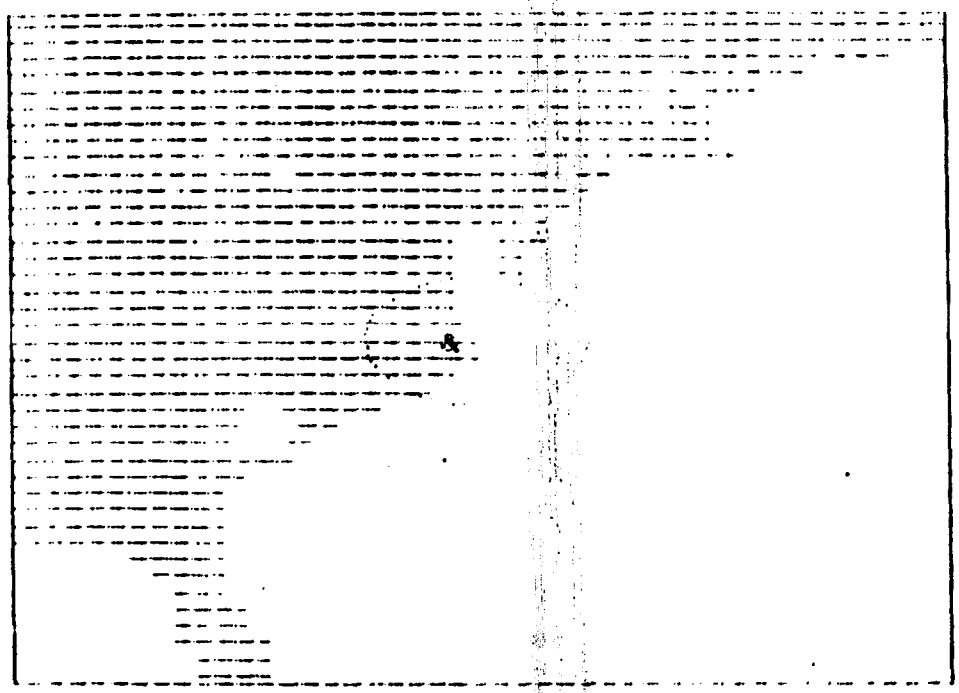

46.0

LAT:
NORTH

26.0

86.0 LON: WEST 66.0

HELO4 (&) COVERAGE = X

GROUNDWAVE:

PAGE 1

*** UNCLASSIFIED ***

DATE: 1/ 1/86 TIME: 18:00 UT ATMOSPHERIC NOISE: YES

FREQ: 9.0 SSN: 50.0 KP: 1.0 MAN-MADE NOISE: SH SNR REQD: 12.0 DB

XMTR: HELO1 36- 0- 0 N 74 30- 0 W ANT: 0 @ *OMNI* PWR: 100.0

RCVR: NFOLK 36-40-12 N 76 31-48 W ANT: 144 @ 1.5 BOUNCE: 106.0 NMI

IONOSPHERE: FOE= 3.0 MHZ FOF1= 4.2 MHZ FOF2= 8.6

HMF2= 340. KM VMF2= 119.4 KM

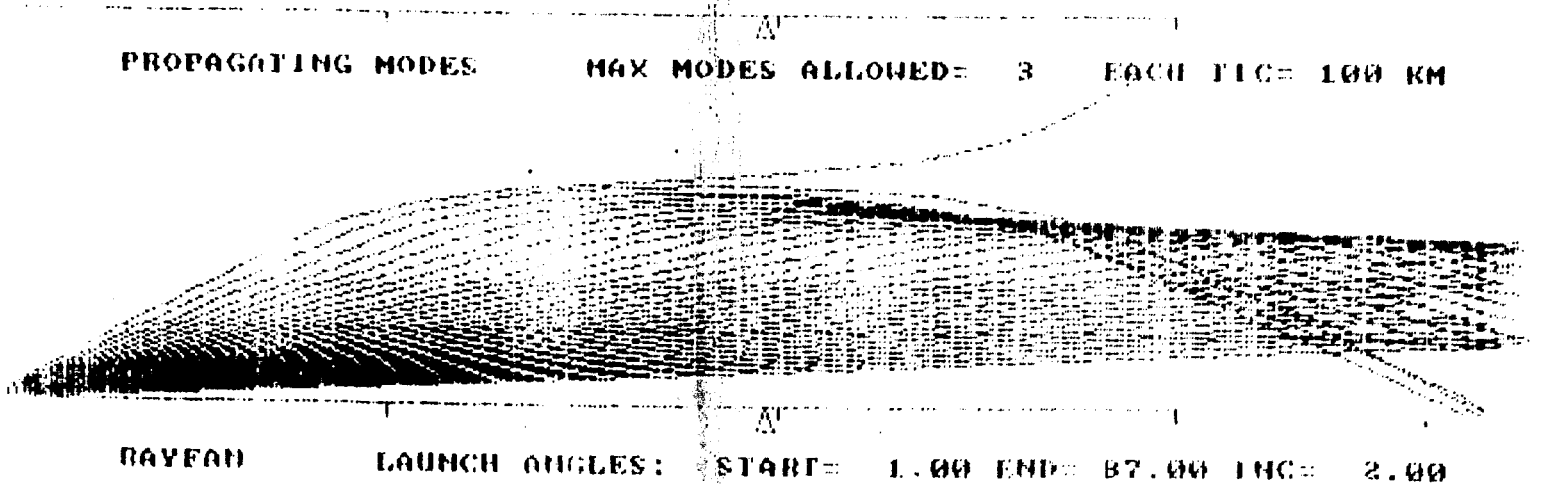

*** UNCLASSIFIED ***

DATE: 1/ 1/86 TIME: 18:00 UT ATMOSPHERIC NOISE: YES
FREQ: 9.0 SSN: 50.0 KP: 1.0 MAN-MADE NOISE: SH SNR REQD: 12.0 DB
XMTR: HELO2 36- 0- 0 N 72-30- 0 W ANT: 0 @ *OMNI* PWR: 100.00
RCVR: NFOLK 36-40-12 N 76 31-48 W ANT: 182 @ *OMNI* RANGE: 198.9 NMI
IONOSPHERE: FOE= 3.0 MHZ FOE1= 4.2 MHZ FOF2= 8.6
HMF2= 341. KM YMF2=119.3 KM

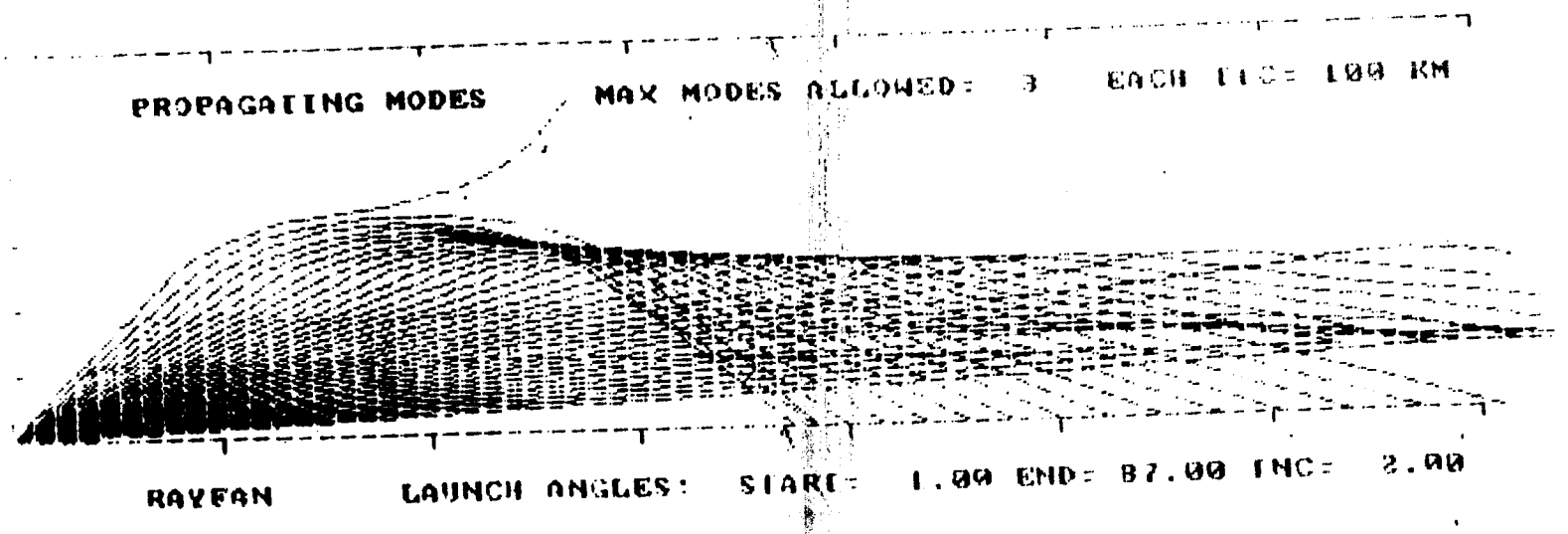

```
*** UNCLASSIFIED ***
DATE:  1/ 1/86 TIME: 18:00 UT  ATMOSPHERIC NOISE: YES
FREQ:    9.0   SSN:   50.0  KP: 1.0  MAN-MADE NOISE: SR   SNR REQD: 12.0 DB
XMTR: HELO4    36- 0- 0 N   76- 0- 0 W ANT:    0 @ *OMNI* PWR:       100.00
RCVR: NFOLK    36-40-12 N   76-31-48 W ANT: 182 @ *OMNI* RANGE:     47.7 NMI
IONOSPHERE:    FOE=  3.0 MHZ  FOF1=  4.2 MHZ  FOF2=  8.6
               HMF2= 340. KM    YMF2=119.5 KM
```

PROPAGATING MODES MAX MODES ALLOWED= 3 EACH INC= 100 KM

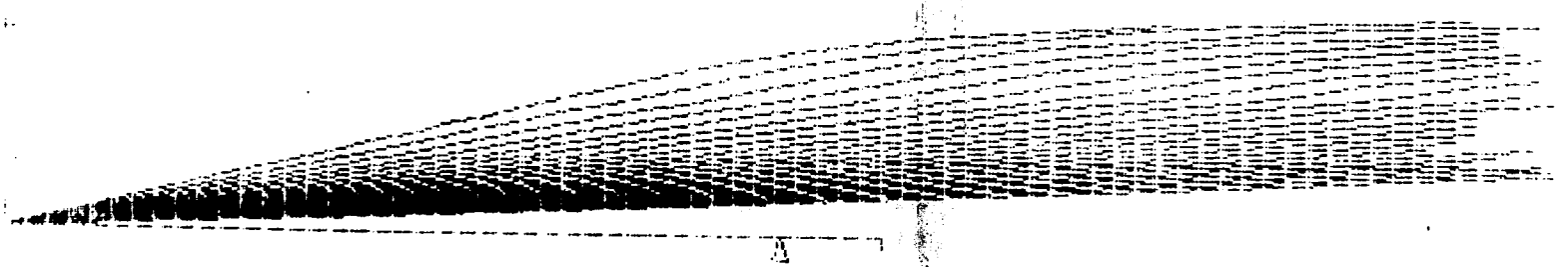

RAYFAN LAUNCH ANGLES: START= 1.00 END= 87.00 INC= 2.00

```
*** UNCLASSIFIED ***        DATE: 1/ 1  AT  18:00 UT
   GROUNDWAVE IS FROM HELO1  ON:          8.984 MHZ
    RANGE TO RECEIVER NFOLK  IS:          106.0 NMI
      TRANSMIT GROUNDWAVE GAIN:             .0 dBi
                  POLARIZATION:              V
       TRANSMIT ANTENNA HEIGHT:          500.0 FEET
        RECEIVE ANTENNA HEIGHT:             .0 FEET
            TRANSMITTER POWER:          100.0 WATTS
          REQUIRED BANDWIDTH:             2.8 KHZ
      REQUIRED SIGNAL TO NOISE:            12.0 dB
                     TERRAIN:              SE
                SURFACE COVER:              //
          SURFACE CONDUCTIVITY:         .40E+01 MHO/M
                  DIELECTRIC:           81.00
                WIND VELOCITY:            25.0 KNOTS
           MANMADE NOISE MODEL:             SH
             ATMOSPHERIC NOISE:            YES
    CALCULATED GROUNDWAVE LOSS:         104.59 dB
               REQUIRED POWER:          56.573 WATTS
             AVAILABLE POWER:          100.000 WATTS
 MAX RANGE FOR POWER OF      100.000 WATTS:      115.4 NMI
 NOTE:  RECEIVE ANTENNA GROUNDWAVE GAIN ASSUMED = 0.0 dBi
GW>
```

```
*** UNCLASSIFIED ***        DATE: 1/ 1  AT  18:00 UT
   GROUNDWAVE IS FROM HELO2  ON:          8.984 MHZ
    RANGE TO RECEIVER NFOLK  IS:          198.9 NMI
      TRANSMIT GROUNDWAVE GAIN:             .0 dBi
                  POLARIZATION:              V
       TRANSMIT ANTENNA HEIGHT:          500.0 FEET
        RECEIVE ANTENNA HEIGHT:             .0 FEET
             TRANSMITTER POWER:          100.0 WATTS
          REQUIRED BANDWIDTH:              2.8 KHZ
       REQUIRED SIGNAL TO NOISE:          12.0 dB
                       TERRAIN:             SE
                 SURFACE COVER:             //
          SURFACE CONDUCTIVITY:        .40E+01 MHO/M
                   DIELECTRIC:           81.00
                WIND VELOCITY:           25.0 KNOTS
           MANMADE NOISE MODEL:             SH
              ATMOSPHERIC NOISE:            YES
    CALCULATED GROUNDWAVE LOSS:        127.36 dB
                REQUIRED POWER:      10712.970 WATTS
              AVAILABLE POWER:       100.000 WATTS
  ** SURFACE WAVE PROPAGATION TO RECEIVER NFOLK  UNLIKELY **
  MAX RANGE FOR POWER OF      100.000 WATTS:       115.4 NMI
 NOTE:  RECEIVE ANTENNA GROUNDWAVE GAIN ASSUMED = 0.0 dBi
GW>
```

```
SELECT DISPLAY OPTION ( A/F/P/E )
Gw>a
*** UNCLASSIFIED ***        DATE: 1/ 1  AT  18:00 UT
   GROUNDWAVE IS FROM HELO4  ON:          8.984 MHZ
    RANGE TO RECEIVER NFOLK  IS:           47.7 NMI
       TRANSMIT GROUNDWAVE GAIN:             .0 dBi
                   POLARIZATION:              V
        TRANSMIT ANTENNA HEIGHT:          500.0 FEET
         RECEIVE ANTENNA HEIGHT:             .0 FEET
              TRANSMITTER POWER:          100.0 WATTS
            REQUIRED BANDWIDTH:            2.8 KHZ
      REQUIRED SIGNAL TO NOISE:           12.0 dB
                       TERRAIN:             SE
                 SURFACE COVER:             //
           SURFACE CONDUCTIVITY:        .40E+01 MHO/M
                    DIELECTRIC:          81.00
                WIND VELOCITY:           25.0 KNOTS
            MANMADE NOISE MODEL:             SH
              ATMOSPHERIC NOISE:            YES
    CALCULATED GROUNDWAVE LOSS:          86.77 dB
                REQUIRED POWER:           .934 WATTS
              AVAILABLE POWER:         100.000 WATTS
  MAX RANGE FOR POWER OF      100.000 WATTS:       115.4 NMI
 NOTE:  RECEIVE ANTENNA GROUNDWAVE GAIN ASSUMED = 0.0 dBi
GW>
```

```
*** UNCLASSIFIED ***          FREQ:  3.12 MHZ
XMTR: HELO1      36- 0- 0 N   74-30- 0 W  ANT:    0
CVR:  NFOLK      36-40-12 N   76-31-48 W  ANT: 144  RANGE:    106.0 NMI
DATE:  7/ 1/86   SSN=  50.0   KP3= 1.0 1.0 1.0 1.0 1.0 1.0 1.0 1.0
DATA SOURCES:  XRAY=DEFAULT    KP=DEFAULT    SSN=DEFAULT
```

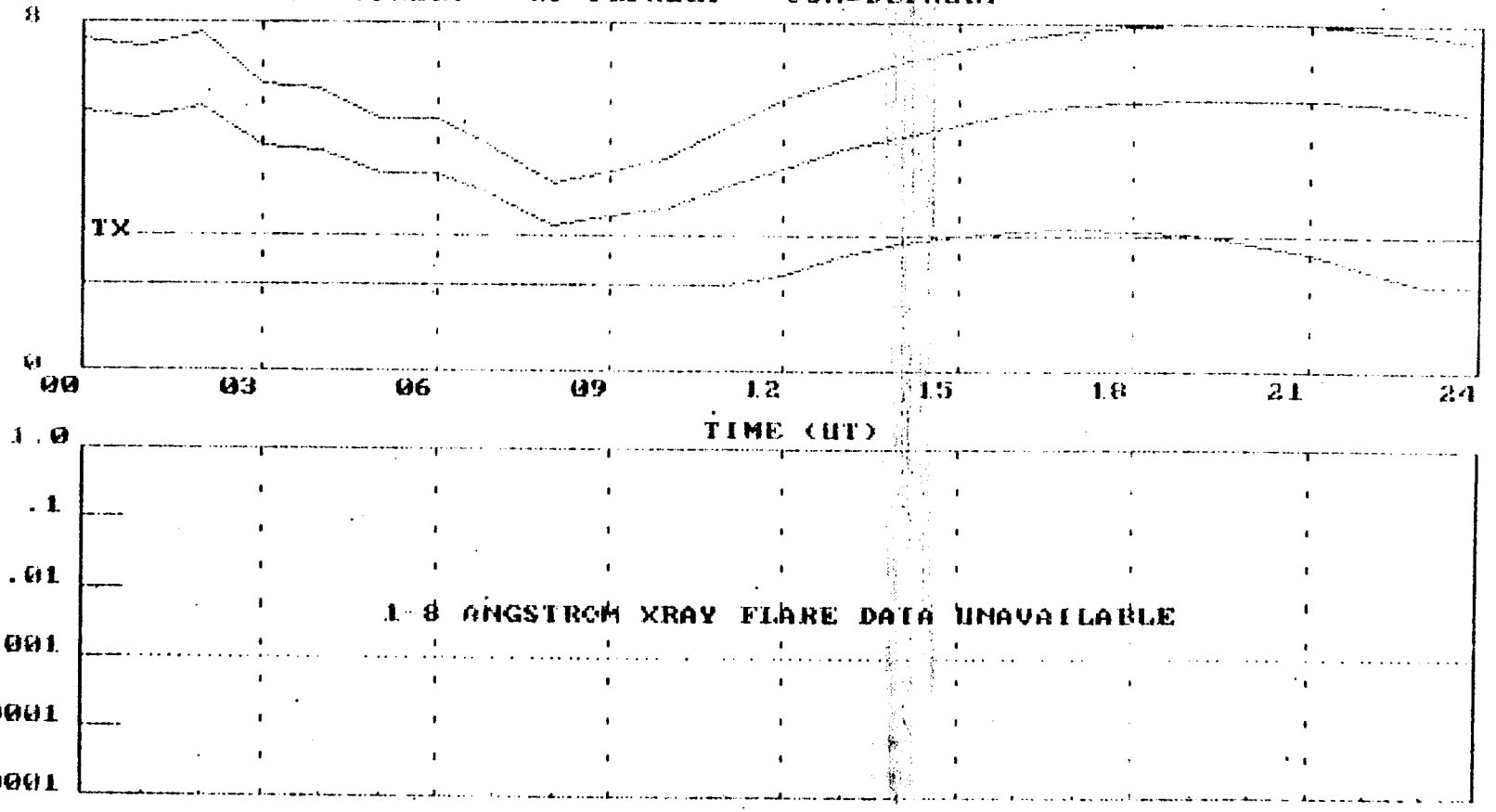

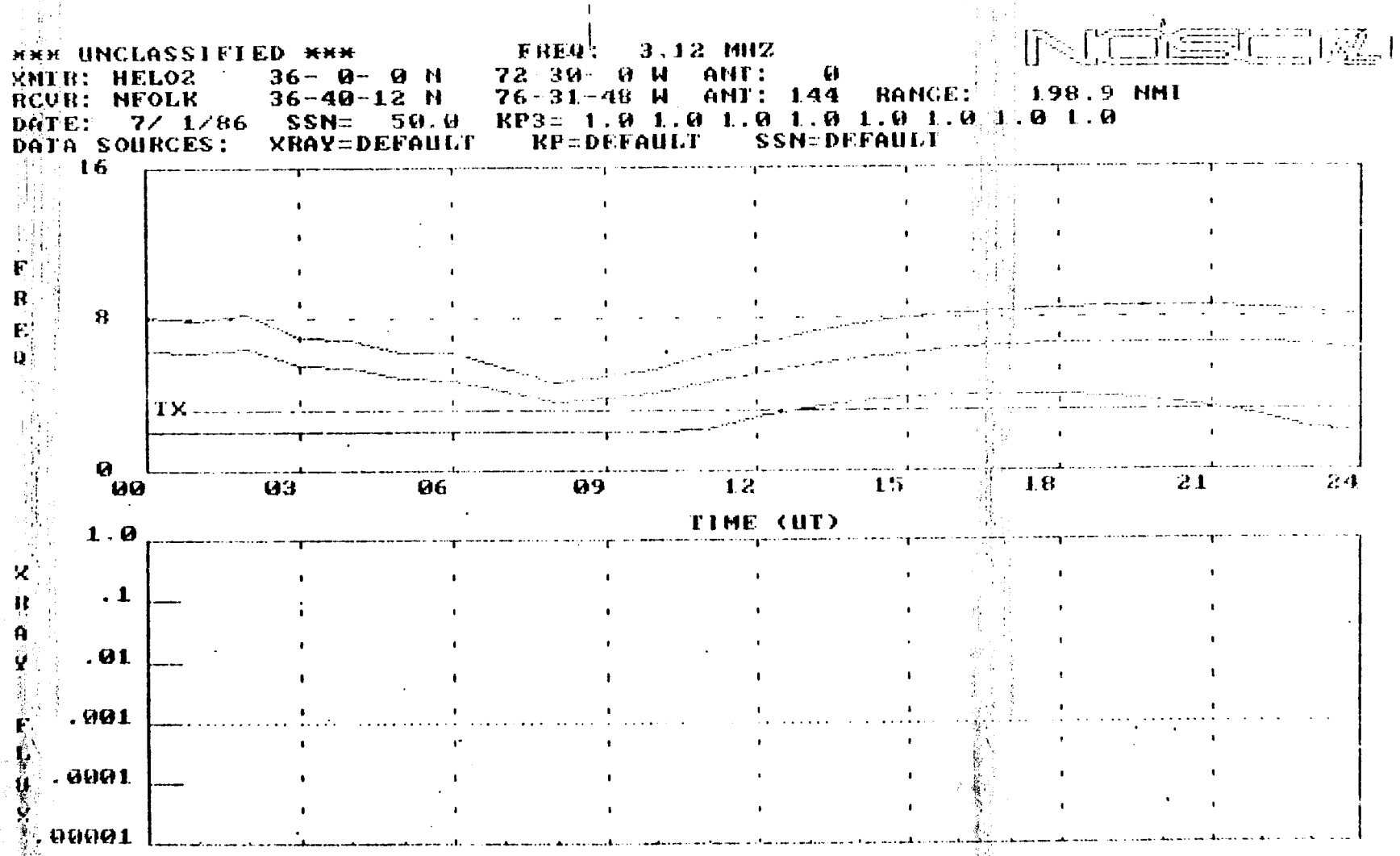
*** UNCLASSIFIED ***
FREQ: 3.12 MHZ
XMTR: HELO2 36- 0- 0 N 72 30- 0 W ANT: 0
RCVR: NFOLK 36-40-12 N 76-31-48 W ANT: 144 RANGE: 198.9 NMI
DATE: 7/ 1/86 SSN= 50.0 KP3= 1.0 1.0 1.0 1.0 1.0 1.0 1.0 1.0
DATA SOURCES: XRAY=DEFAULT KP=DEFAULT SSN=DEFAULT
FREQ
16
8
0
TX
00
03
06
09
12
15
18
21
24
TIME (UT)
XRAY FLUX
1.0
.1
.01
.001
.0001
.00001

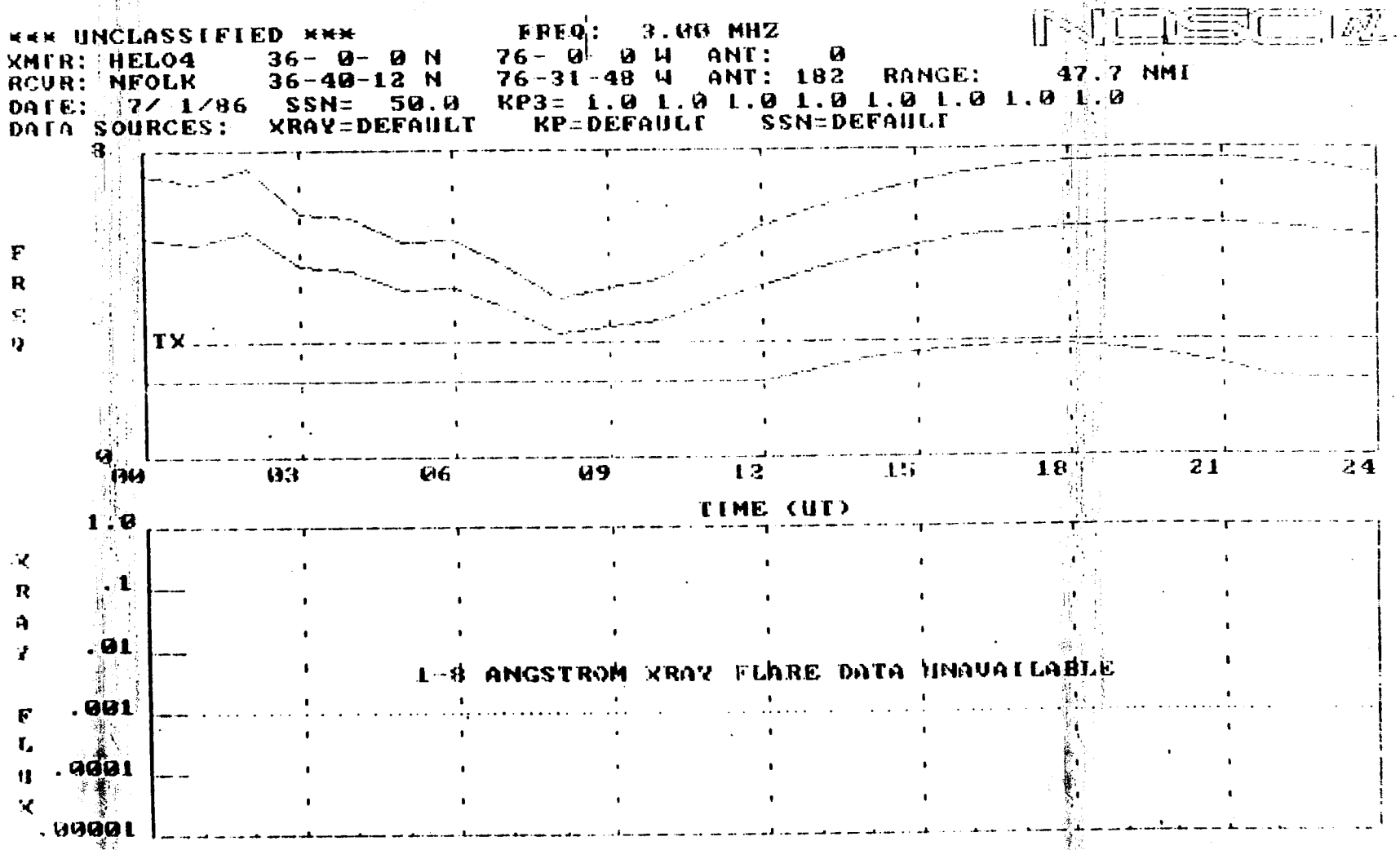
*** UNCLASSIFIED ***
FREQ: 3.00 MHZ
XMTR: HELO4 36- 0- 0 N 76- 0 0 W ANT: 0
RCVR: NFOLK 36-40-12 N 76-31-48 W ANT: 182 RANGE: 47.7 NMI
DATE: 7/ 1/86 SSN= 50.0 KP3= 1.0 1.0 1.0 1.0 1.0 1.0 1.0 1.0
DATA SOURCES: XRAY=DEFAULT KP=DEFAULT SSN=DEFAULT
FREQ
TX
00
03
06
09
12
15
18
21
24
TIME (UT)
XRAY FLUX
1.0
.1
.01
.001
.0001
.00001
1-8 ANGSTROM XRAY FLARE DATA UNAVAILABLE

*** UNCLASSIFIED ***

I AREA COVERAGE I DATE: 7/ 1/81 TIME: 09:00 UT

TRANSMITTER FREQUENCY: 3.12 MHZ

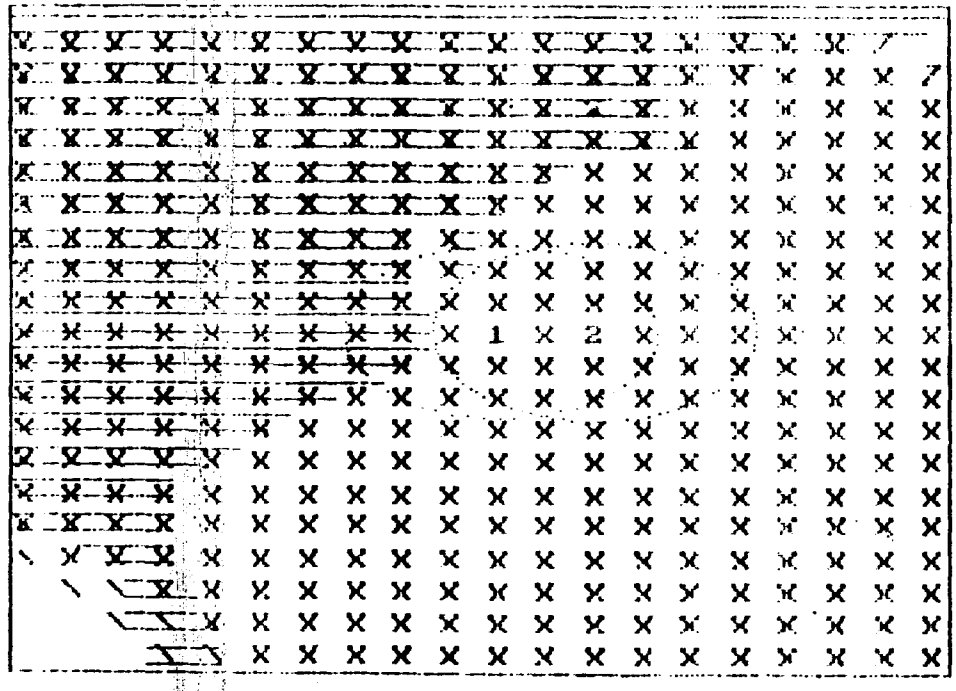

HELO1 (#1)= / HELO2 (#2)= \ BOTH = X GROUNDWAVE .....

*** UNCLASSIFIED ***

[AREA COVERAGE] DATE: 7/ 1/86 TIME: 09:00 UT

TRANSMITTER FREQUENCY: 3.00 MHZ

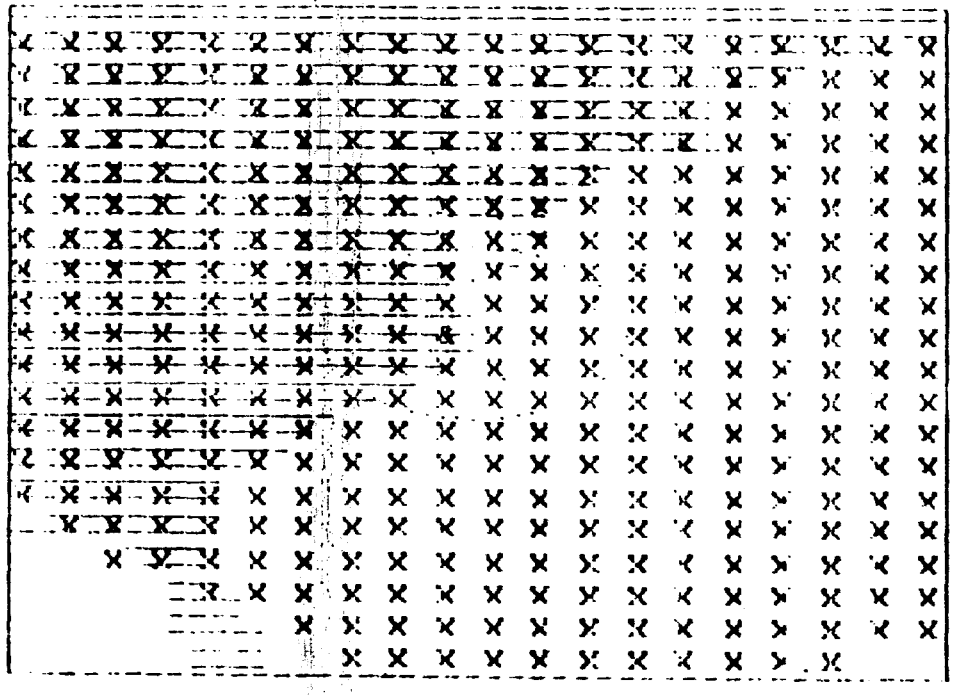

86.0 LON: WEST 66.0

HELP (&) COVERAGE = X

GROUNDWAVE

PAGE 1

*** UNCLASSIFIED ***
DATE: 7/ 1/86 TIME: 09:00 UT ATMOSPHERIC NOISE: YES
CCIR: 3.1 SSN: 50.0 KP: 1.0 MAN-MADE NOISE: SU SNR REQD: 12.0 DB
XMTR: HELO2 36- 0- 0 N 72-30- 0 W ANT: 0 @ *OMNI* PWR: 100.00
RCVR: NFOLK 36-40-12 N 76-31-48 W ANT: 144 @ 1.5 RANGE: 198.9 NMI
IONOSPHERE: FOE= 1.1 MHZ FOF1= 1.6 MHZ FOF2= 4.4
HMF2= 350. KM YMF2=102.5 KM

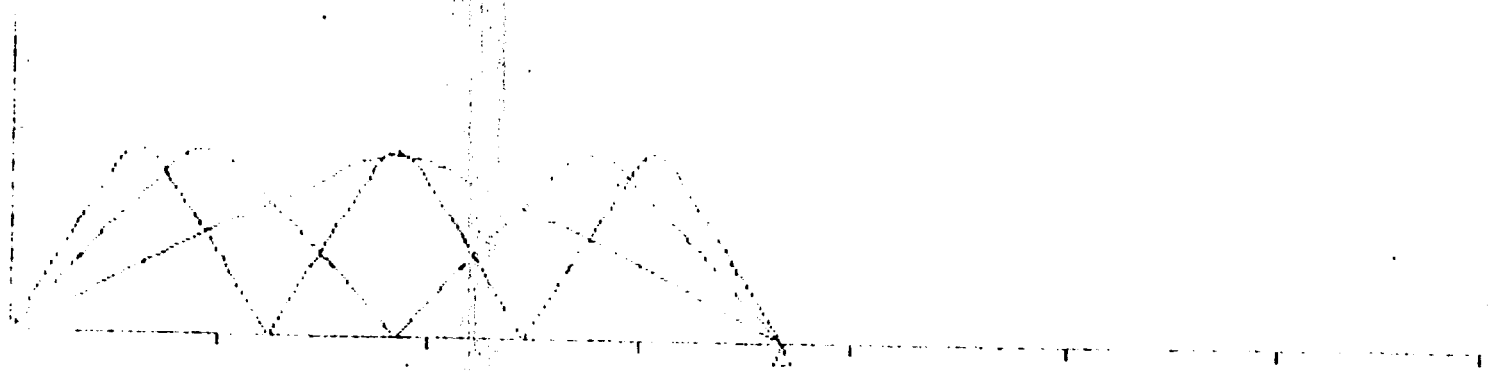

PROPAGATING MODES MAX MODES ALLOWED= 3 EACH TIC= 100 KM

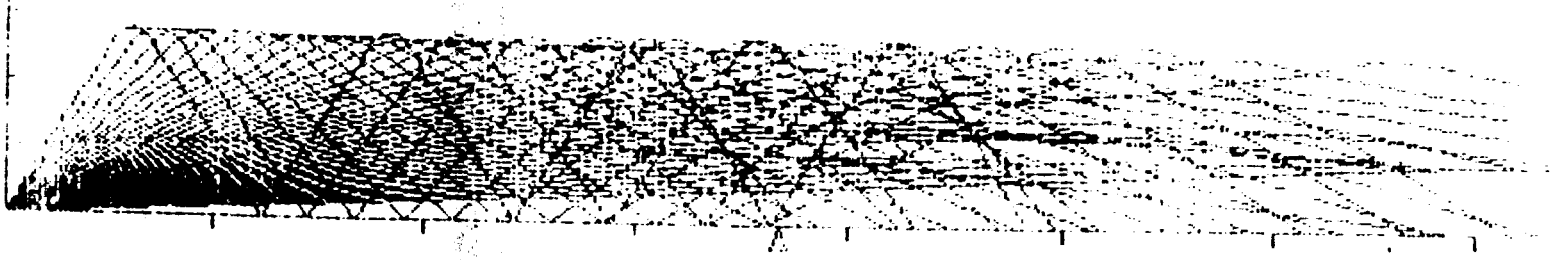

RAYFAN LAUNCH ANGLES: START= 1.00 END= 87.00 INC= 2.00

*** UNCLASSIFIED ***

ADVANCED PROPHET RAYTRACE SYNOPSIS

DATE: 7/ 1/86 TIME: 09:00 UT ATMOSPHERIC NOISE: YES BWIDTH: 2.800 KHZ
FREQ: 3.1 SSN: 50.0 KP: 1.0 MAN-MADE NOISE: SH SNR REQD: 12.0 DB
XMTR: HELO2 36- 0- 0 N 72-30- 0 W ANT: 0 @ *OMNI* PWR: 100.00
RCVR: NFOLK 36-40-12 N 76-31-48 W ANT: 144 @ 1.5 RANGE: 198.9 NMI
IONOSPHERE: FOE= 1.1 MHZ FOF1= 1.6 MHZ FOF2= 4.4
HMF2= 350. KM YMF2=102.5 KM

NHOP	1	2	3	0	0	0
MODE	3000000	3300000	3330000	0000000	0000000	0000000
ANGLE	58.55	73.45	78.90	.00	.00	.00
DELAY(MSEC)	2.464	4.520	6.680	.000	.000	.000
LOSS(DB)	100.75	111.05	117.88	.00	.00	.00
GAIN TX/RX	0/-10	0/-10	0/-10	0/ 0	0/ 0	0/ 0
1HZ SNR(DB)	47.14	36.84	30.01	.00	.00	.00
ADJ SNR(DB)	12.67	2.37	-4.46	.00	.00	.00
VIR HT1(KM)	318.94	327.98	330.85	.00	.00	.00
VIR HT2(KM)	.00	324.94	328.79	.00	.00	.00
VIR HT3(KM)	.00	.00	326.92	.00	.00	.00

RA>

*** UNCLASSIFIED ***

DATE: 7/ 1/86 TIME: 09:00 UT ATMOSPHERIC NOISE: YES

FREQ: 3.1 SSN: 50.0 KP: 1.0 MAN MADE NOISE: 58 SNR REQD: 12.0 DB

XMTR: HELO1 36- 0- 0 N 74-30- 0 W ANT: 0 @ *OMNI* PWR: 100.00

RCVR: NFOLK 36-40-12 N 76-31-48 W ANT: 144 @ 1.5 RANGE: 106.0 NMI

IONOSPHERE: FOE= 1.1 MHZ FOE1= 1.6 MHZ FOE2= 4.4

HMF2= 350. KM YMF2=103.4 KM

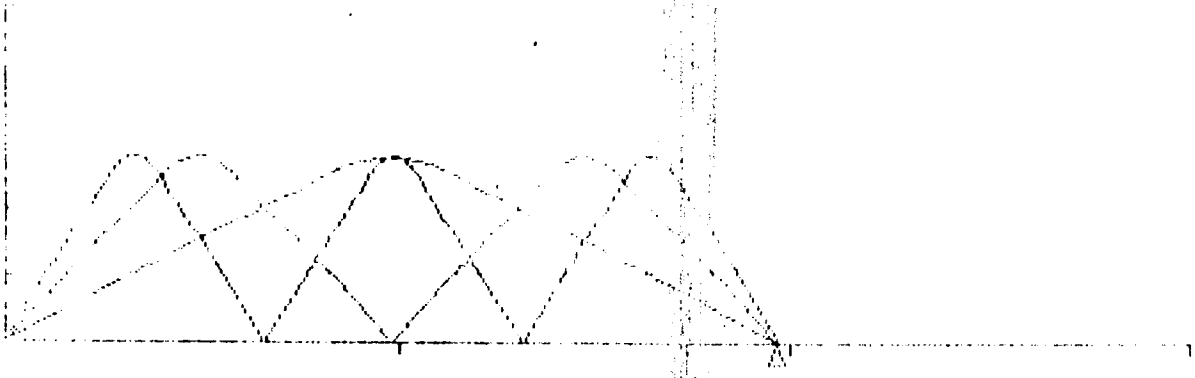

PROPAGATING MODES MAX MODES ALLOWED= 3 EACH FIC= 100 KM

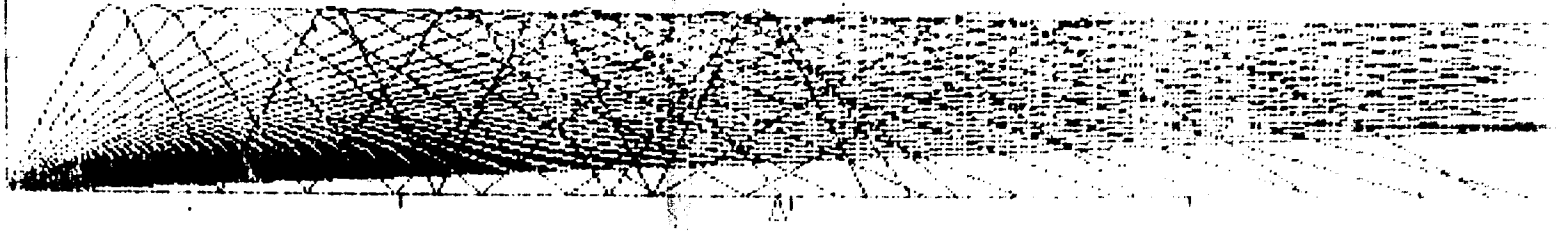

RAYFAN LAUNCH ANGLES: START= 1.00 END= 87.00 INC= 2.00

*** UNCLASSIFIED ***

ADVANCED PROPHET RAYTRACE SYNOPSIS

DATE: 7/ 1/86 TIME: 09:00 UT ATMOSPHERIC NOISE: YES BWIDTH: 2.800 KHZ
FREQ: 3.1 SSN: 50.0 KP: 1.0 MAN-MADE NOISE: SH SNR REQD: 12.0 DB
XMTR: HELO1 36- 0- 0 N 74-30- 0 W ANT: 0 @ *OMNI* PWR: 100.00
RCVR: NFOLK 36-40-12 N 76-31-48 W ANT: 144 @ 1.5 RANGE: 106.0 NMI
IONOSPHERE: FOE= 1.1 MHZ FOF1= 1.6 MHZ FOF2= 4.4
HMF2= 350. KM YMF2=102.4 KM

NHOP	1	2	3	0	0	0
MODE	3000000	3300000	3330000	0000000	0000000	0000000
ANGLE	72.30	81.05	84.00	.00	.00	.00
DELAY(MSEC)	2.261	4.421	6.603	.000	.000	.000
LOSS(DB)	99.23	110.94	117.98	.00	.00	.00
GAIN TX/RX	0/-10	0/-10	0/-10	0/ 0	0/ 0	0/ 0
1HZ SNR(DB)	48.66	36.95	29.91	.00	.00	.00
ADJ SNR(DB)	14.19	2.48	-4.56	.00	.00	.00
VIR HT1(KM)	324.54	329.30	330.22	.00	.00	.00
VIR HT2(KM)	.00	327.55	329.13	.00	.00	.00
VIR HT3(KM)	.00	.00	328.08	.00	.00	.00

RA>

*** UNCLASSIFIED ***

DATE: 7/ 1/86 TIME: 09:00 UT ATMOSPHERIC NOISE: YES
FREQ: 3.0 SSN: 50.0 KP: 1.0 MAN MADE NOISE: SH SNR REQD: 12.0 DB
XMTR: HELO4 36- 0- 0 N 76- 0- 0 W ANT: 0 @ *OMNI* PWR: 100.00
RCVR: NFOLK 36-40-12 N 76-31-18 W ANT: 182 @ *OMNI* RANGE: 17.7 NMI
IONOSPHERE: FOE: 1.1 MHZ FOF1: 1.6 MHZ FOF2: 4.1
HMF2: 350. KM YMF2: 102.3 KM

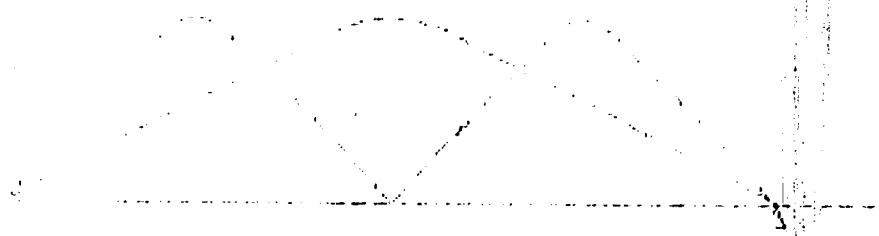

PROPAGATING MODES MAX MODES ALLOWED: 3 EACH TIC: 100 KM

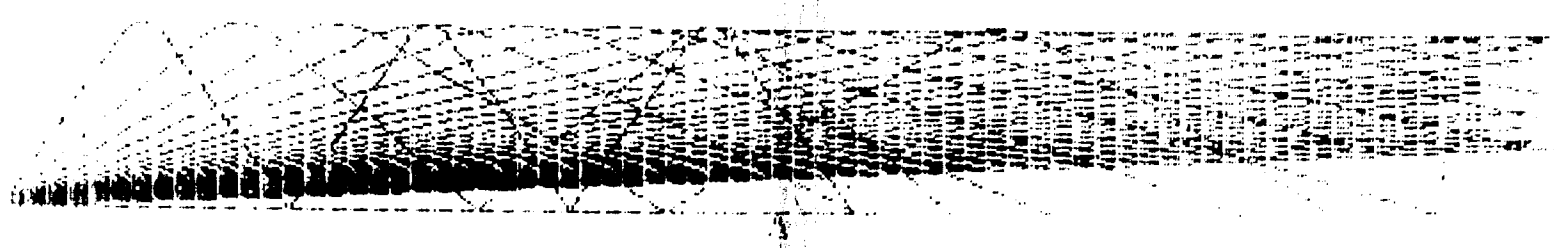

RAYFAN LAUNCH ANGLES: START: 1.00 END: 87.00 INC: 2.00

*** UNCLASSIFIED ***

ADVANCED PROPHET RAYTRACE SYNOPSIS

DATE: 7/ 1/86 TIME: 09:00 UT ATMOSPHERIC NOISE: YES BWIDTH: 2.800 KHZ
FREQ: 3.0 SSN: 50.0 KP: 1.0 MAN-MADE NOISE: SH SNR REQD: 12.0 DB
XMTR: HELO4 36- 0- 0 N 76- 0- 0 W ANT: 0 @ *OMNI* PWR: 100.00
RCVR: NFOLK 36-40-12 N 76-31-48 W ANT: 182 @ *OMNI* RANGE: 47.7 NMI
IONOSPHERE: FOE= 1.1 MHZ FOF1= 1.6 MHZ FOF2= 4.4
HMF2= 350. KM YMF2=102.3 KM

NHOP	1	2	0	0	0	0
MODE	3000000	3300000	0000000	0000000	0000000	0000000
ANGLE	81.80	85.90	.00	.00	.00	.00
DELAY(MSEC)	2.170	4.318	.000	.000	.000	.000
LOSS(DB)	98.37	110.40	.00	.00	.00	.00
GAIN TX/RX	0/-40	0/-40	0/ 0	0/ 0	0/ 0	0/ 0
1HZ SNR(DB)	18.81	6.78	.00	.00	.00	.00
ADJ SNR(DB)	-15.66	-27.69	.00	.00	.00	.00
VIR HT1(KM)	322.98	324.06	.00	.00	.00	.00
VIR HT2(KM)	.00	323.39	.00	.00	.00	.00
VIR HT3(KM)	.00	.00	.00	.00	.00	.00

RA>

```
*** UNCLASSIFIED ***        DATE: 7/ 1  AT  09:00 UT
   GROUNDWAVE IS FROM HELO1  ON:          3.123 MHZ
    RANGE TO RECEIVER NFOLK  IS:          106.0 NMI
      TRANSMIT GROUNDWAVE GAIN:             .0 dBi
                  POLARIZATION:              V
       TRANSMIT ANTENNA HEIGHT:          500.0 FEET
        RECEIVE ANTENNA HEIGHT:             .0 FEET
            TRANSMITTER POWER:          100.0 WATTS
          REQUIRED BANDWIDTH:             2.8 KHZ
       REQUIRED SIGNAL TO NOISE:          12.0 dB
                       TERRAIN:             SE
                 SURFACE COVER:             //
          SURFACE CONDUCTIVITY:         .40E+01 MHO/M
                   DIELECTRIC:           81.00
                WIND VELOCITY:           25.0 KNOTS
           MANMADE NOISE MODEL:             SH
            ATMOSPHERIC NOISE:            YES
     CALCULATED GROUNDWAVE LOSS:         83.49 dB
                REQUIRED POWER:         14.832 WATTS
              AVAILABLE POWER:         100.000 WATTS
 MAX RANGE FOR POWER OF      100.000 WATTS:      160.1 NMI
 NOTE:  RECEIVE ANTENNA GROUNDWAVE GAIN ASSUMED = 0.0 dBi
GW>
```

```
*** UNCLASSIFIED ***        DATE: 7/ 1  AT  09:00 UT
   GROUNDWAVE IS FROM HELO2  ON:          3.123 MHZ
    RANGE TO RECEIVER NFOLK  IS:          198.9 NMI
      TRANSMIT GROUNDWAVE GAIN:             .0 dBi
                  POLARIZATION:              V
       TRANSMIT ANTENNA HEIGHT:          500.0 FEET
        RECEIVE ANTENNA HEIGHT:             .0 FEET
            TRANSMITTER POWER:          100.0 WATTS
          REQUIRED BANDWIDTH:             2.8 KHZ
       REQUIRED SIGNAL TO NOISE:          12.0 dB
                       TERRAIN:             SE
                  SURFACE COVER:             //
          SURFACE CONDUCTIVITY:        .40E+01 MHO/M
                   DIELECTRIC:           81.00
                WIND VELOCITY:           25.0 KNOTS
           MANMADE NOISE MODEL:             SH
              ATMOSPHERIC NOISE:            YES
    CALCULATED GROUNDWAVE LOSS:          97.03 dB
                REQUIRED POWER:        288.807 WATTS
             AVAILABLE POWER:          100.000 WATTS
  ** SURFACE WAVE PROPAGATION TO RECEIVER NFOLK  UNLIKELY **
  MAX RANGE FOR POWER OF      100.000 WATTS:       164.8 NMI
 NOTE:  RECEIVE ANTENNA GROUNDWAVE GAIN ASSUMED = 0.0 dBi
GW>
```

```
SELECT DISPLAY OPTION ( A/F/P/E )
GW>a
*** UNCLASSIFIED ***          DATE: 7/ 1  AT  09:00 UT
   GROUNDWAVE IS FROM HELO4  ON:          3.000 MHZ
    RANGE TO RECEIVER NFOLK  IS:           47.7 NMI
       TRANSMIT GROUNDWAVE GAIN:             .0 dBi
                   POLARIZATION:              V
        TRANSMIT ANTENNA HEIGHT:          500.0 FEET
         RECEIVE ANTENNA HEIGHT:             .0 FEET
              TRANSMITTER POWER:          100.0 WATTS
            REQUIRED BANDWIDTH:            2.8 KHZ
      REQUIRED SIGNAL TO NOISE:           12.0 dB
                       TERRAIN:             SE
                 SURFACE COVER:             //
           SURFACE CONDUCTIVITY:        .40E+01 MHO/M
                     DIELECTRIC:          81.00
                 WIND VELOCITY:           25.0 KNOTS
           MANMADE NOISE MODEL:             SH
              ATMOSPHERIC NOISE:            YES
    CALCULATED GROUNDWAVE LOSS:          72.41 dB
                REQUIRED POWER:          1.450 WATTS
              AVAILABLE POWER:         100.000 WATTS
  MAX RANGE FOR POWER OF      100.000 WATTS:       157.5 NMI
 NOTE:  RECEIVE ANTENNA GROUNDWAVE GAIN ASSUMED = 0.0 dBi
GW>
```

*** UNCLASSIFIED ***

GROUNDWAVE ANALYSIS FOR DATE: 7/ 1/86 TIME: 09:00 UT
XMTR: HELO1 POLARIZATION: V POWER: 100.000 WATTS
RCVR: NFOLK FREQUENCY: 3.000 MHZ RANGE: 47.7 NMI
ANTENNA HEIGHT XMTR: 500.0 FEET RCVR: .0 FEET
TERRAIN: SE COVER: // WIND: 25.0 KNOTS ATMOSPHERIC NOISE: YES
DIELECTRIC: 81.0 SURFACE CONDUCTIVITY: .40E+01 MHO/M
REQD SNR: 12.0 dB BANDWIDTH: 2.800 KHZ MANMADE NOISE: SH

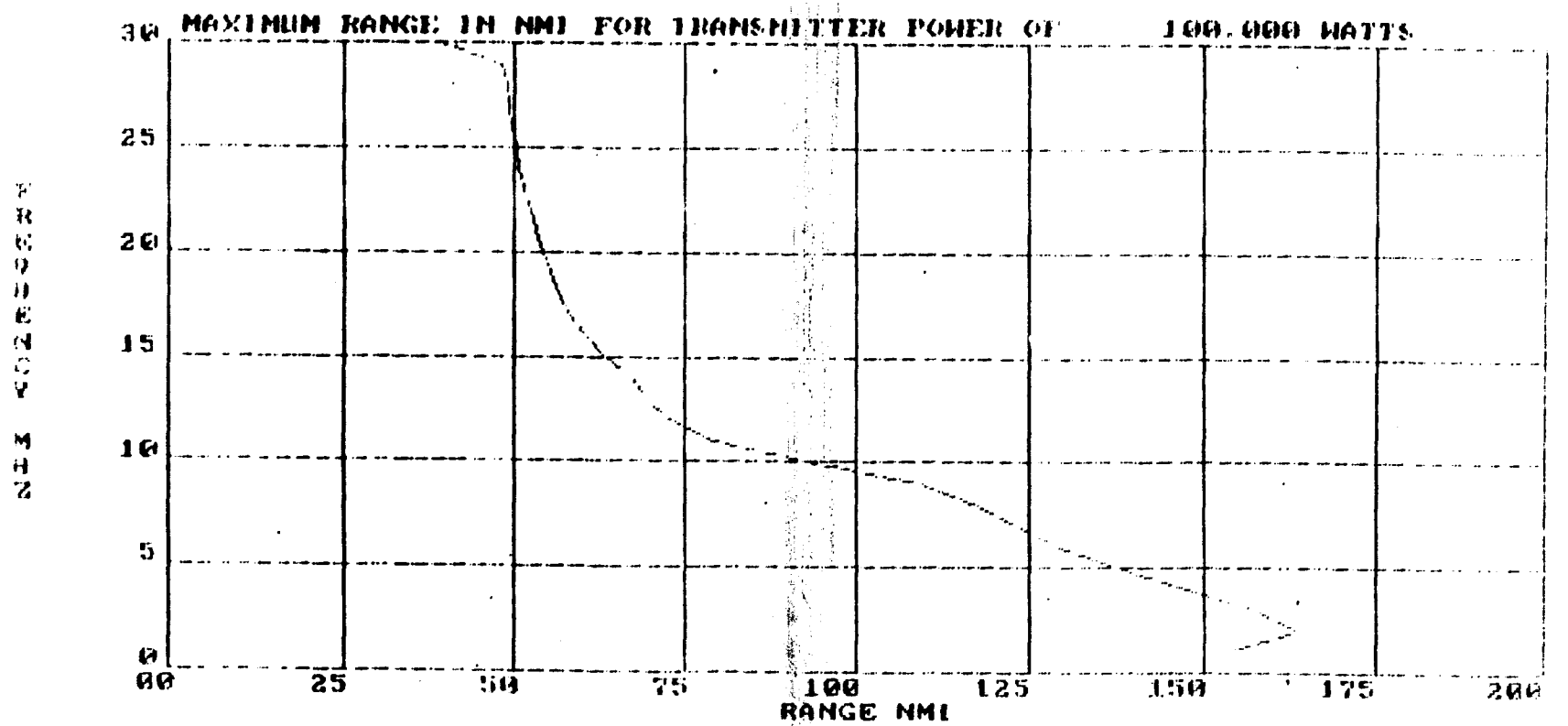

346

*** UNCLASSIFIED ***

[AREA COVERAGE] DATE: 7/ 1/86 TIME: 09:00 UT

TRANSMITTER FREQUENCY: 5.70 MHZ

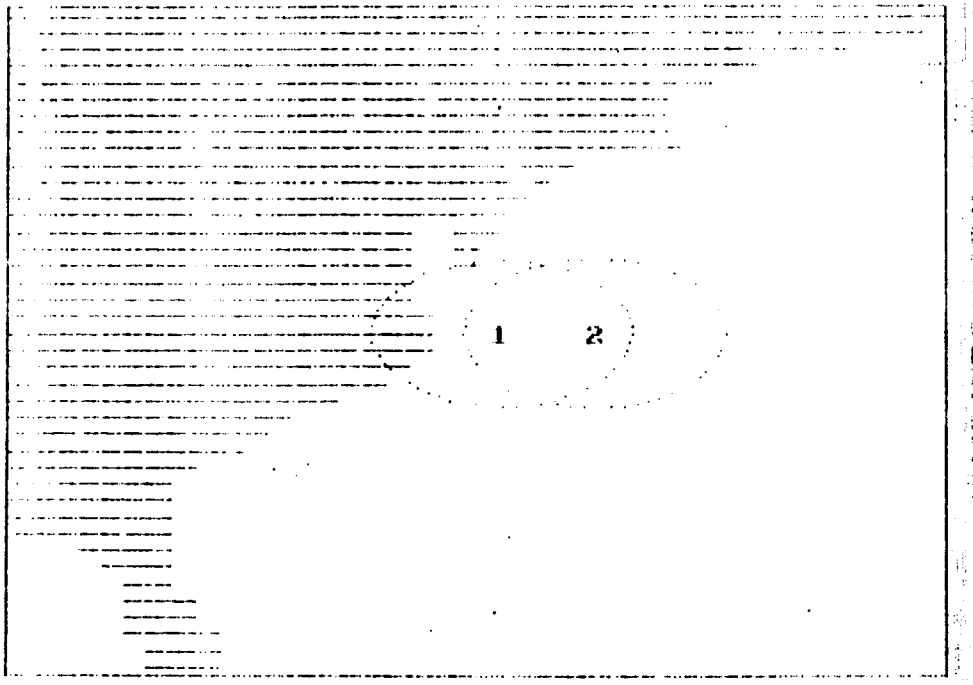

46.0

LAT:
NORTH

26.0

85.0 LON: WEST 65.0

HELO1 (#1) = / HELO2 (#2) = \ BOTH = X GROUNDWAVE = ...

*** UNCLASSIFIED ***

[AREA COVERAGE] DATE: 7/ 1/86 TIME: 09:00 UT

TRANSMITTER FREQUENCY: 5.70 MHZ

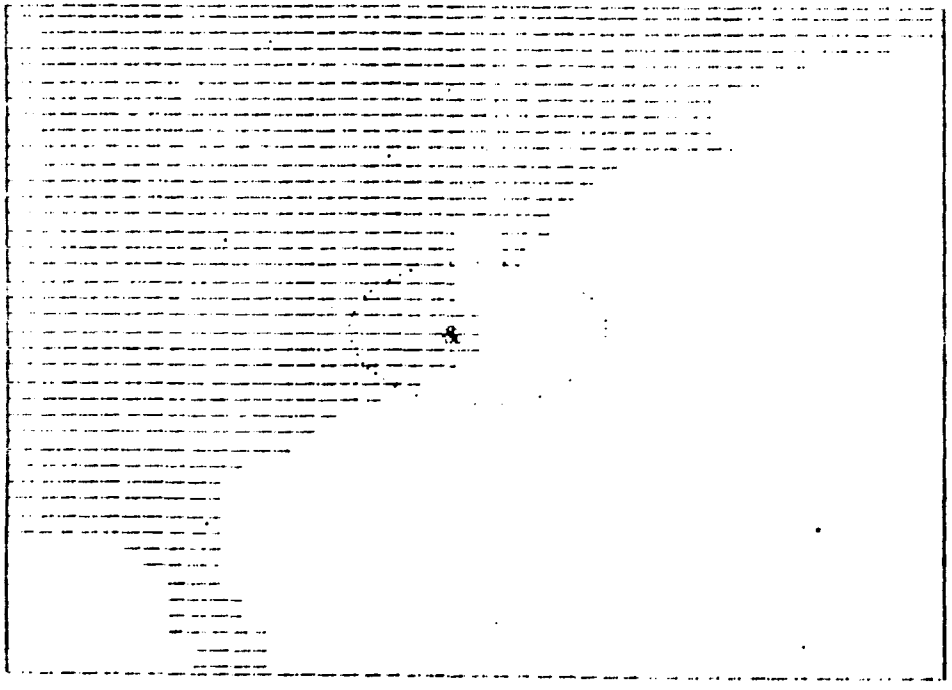

HELO4 (&) COVERAGE = X

GROUNDWAVE:

PAGE 1

351

```
*** UNCLASSIFIED ***
DATE:  7/ 1/86 TIME: 09:00 UT  ATMOSPHERIC NOISE: YES
FREQ:   5.7   SSN:  50.0  KP: 1.0  MAN-MADE NOISE: SH  SNR REQD: 12.0 DB
XMTR: HELO1  36- 0- 0 N  74-30- 0 W ANT:   0 @ *OMNI* PWR:      100.00
RCVR: NFOLK  36-40-12 N  76-31-48 W ANT: 144 @    1.5 RANGE:   106.0 NMI
IONOSPHERE:  FOE=  1.2 MHZ  FOF1=  1.6 MHZ  FOF2=  4.3
             HMF2= 350. KM    YMF2=102.6 KM
```

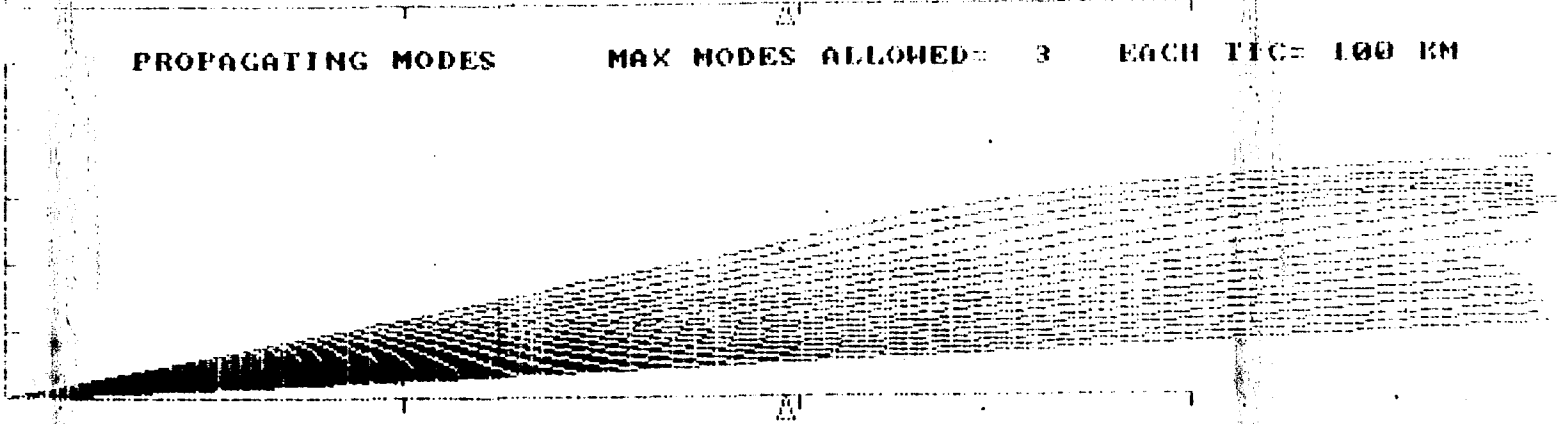

*** UNCLASSIFIED ***
DATE: 7/ 1/86 TIME: 09:00 UT ATMOSPHERIC NOISE: YES
FREQ: 5.7 SSN: 50.0 KP: 1.0 MAN-MADE NOISE: SH SNR REQD: 12.0 DB
XMTR: HELO2 36- 0- 0 N 72-30- 0 W ANT: 0 @ *OMNI* PWR: 100.00
RCVR: NFOLK 36-40-12 N 76-31-48 W ANT: 144 @ 1.5 RANGE: 198.9 NMI
IONOSPHERE: FOE= 1.2 MHZ FOF1= 1.7 MHZ FOF2= 4.3
HMF2= 350. KM YMF2=103.1 KM

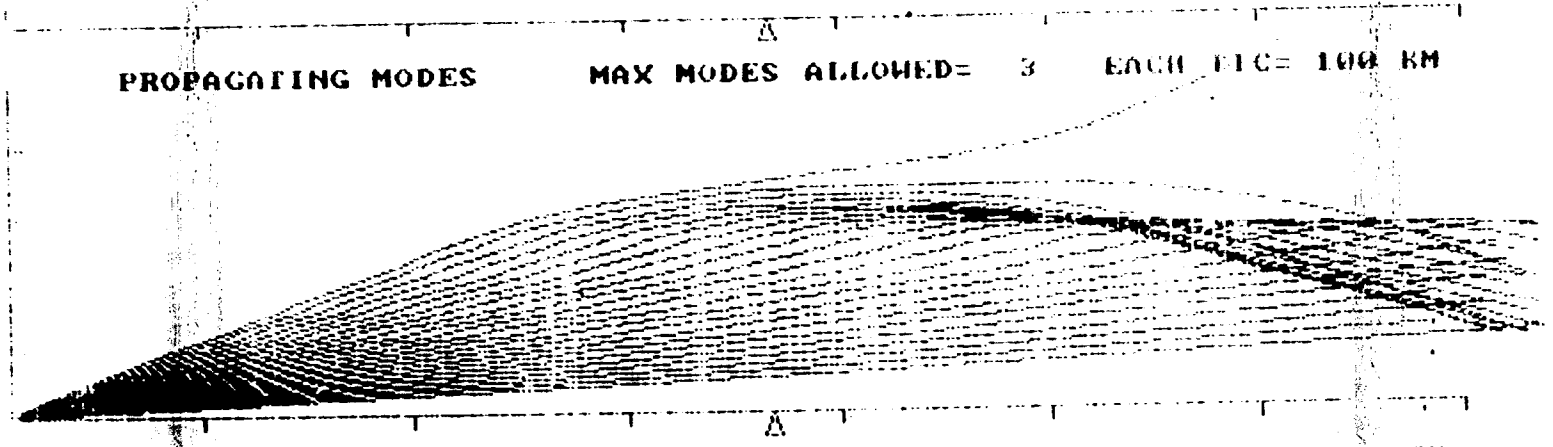

```
*** UNCLASSIFIED ***
DATE:  27 1/86 TIME: 09:00 HT   ATMOSPHERIC NOISE: Y65
FREQ:   5.7   SSN:  50.0  KP: 1.0  MAN MADE NOISE: SH   SNR REQD: 12.0 DB
XMTR: HELO4  36- 0- 0 N  76- 0- 0 W ANT:   0 @ *OMNI* THR:      100.00
RCVR: NFOLK  36-40-12 N  76-31-48 W ANT: 182 @ *OMNI* RANGE:    17.7 NMI
IONOSPHERE:  FOE=  1.1 MHZ  FOF1=  1.6 MHZ  FOF2=  4.3
             HMF2= 350. KM    YMF2=102.3 KM
```

PROPAGATING MODES MAX MODES ALLOWED= 3 EACH ITC= 100 KM

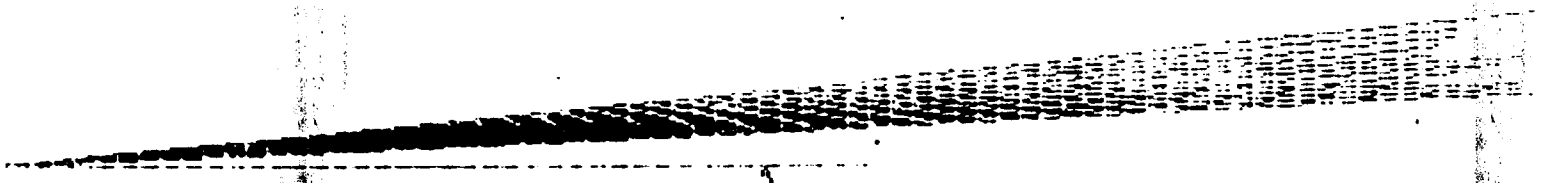

RAYFAN LAUNCH ANGLES: START= 1.00 END= 87.00 INC= 2.00

```
*** UNCLASSIFIED ***        DATE: 7/ 1  AT  09:00 UT
   GROUNDWAVE IS FROM HELO1  ON:          5.696 MHZ
    RANGE TO RECEIVER NFOLK  IS:          106.0 NMI
      TRANSMIT GROUNDWAVE GAIN:             .0 dBi
                  POLARIZATION:              V
       TRANSMIT ANTENNA HEIGHT:          500.0 FEET
        RECEIVE ANTENNA HEIGHT:             .0 FEET
            TRANSMITTER POWER:          100.0 WATTS
          REQUIRED BANDWIDTH:             2.8 KHZ
       REQUIRED SIGNAL TO NOISE:           12.0 dB
                       TERRAIN:              SE
                  SURFACE COVER:              //
             SURFACE CONDUCTIVITY:        .40E+01 MHO/M
                    DIELECTRIC:           81.00
                  WIND VELOCITY:           25.0 KNOTS
            MANMADE NOISE MODEL:              SH
              ATMOSPHERIC NOISE:             YES
     CALCULATED GROUNDWAVE LOSS:          93.53 dB
                 REQUIRED POWER:         29.126 WATTS
               AVAILABLE POWER:         100.000 WATTS
  MAX RANGE FOR POWER OF      100.000 WATTS:       133.7 NMI
 NOTE:  RECEIVE ANTENNA GROUNDWAVE GAIN ASSUMED = 0.0 dBi
GW>
```

```
*** UNCLASSIFIED ***        DATE: 7/ 1  AT  09:00 UT
   GROUNDWAVE IS FROM HELO2  ON:          5.696 MHZ
    RANGE TO RECEIVER NFOLK  IS:          198.9 NMI
      TRANSMIT GROUNDWAVE GAIN:            .0 dBi
                  POLARIZATION:             V
       TRANSMIT ANTENNA HEIGHT:          500.0 FEET
        RECEIVE ANTENNA HEIGHT:            .0 FEET
             TRANSMITTER POWER:          100.0 WATTS
           REQUIRED BANDWIDTH:             2.8 KHZ
       REQUIRED SIGNAL TO NOISE:           12.0 dB
                        TERRAIN:             SE
                  SURFACE COVER:             //
          SURFACE CONDUCTIVITY:        .40E+01 MHO/M
                   DIELECTRIC:           81.00
                 WIND VELOCITY:           25.0 KNOTS
           MANMADE NOISE MODEL:             SH
              ATMOSPHERIC NOISE:           YES
    CALCULATED GROUNDWAVE LOSS:        110.23 dB
                REQUIRED POWER:       1222.074 WATTS
             AVAILABLE POWER:          100.000 WATTS
  ** SURFACE WAVE PROPAGATION TO RECEIVER NFOLK  UNLIKELY **
  MAX RANGE FOR POWER OF      100.000 WATTS:      136.3 NMI
 NOTE:  RECEIVE ANTENNA GROUNDWAVE GAIN ASSUMED = 0.0 dBi
GW>
```

```
SELECT DISPLAY OPTION ( A/F/P/E )
GW>a
*** UNCLASSIFIED ***        DATE: 7/ 1  AT  09:00 UT
    GROUNDWAVE IS FROM HELO4  ON:          5.696 MHZ
     RANGE TO RECEIVER NFOLK  IS:           47.7 NMI
        TRANSMIT GROUNDWAVE GAIN:             .0 dBi
                    POLARIZATION:              V
         TRANSMIT ANTENNA HEIGHT:          500.0 FEET
          RECEIVE ANTENNA HEIGHT:             .0 FEET
               TRANSMITTER POWER:          100.0 WATTS
             REQUIRED BANDWIDTH:             2.8 KHZ
       REQUIRED SIGNAL TO NOISE:            12.0 dB
                        TERRAIN:              SE
                  SURFACE COVER:              //
            SURFACE CONDUCTIVITY:        .40E+01 MHO/M
                     DIELECTRIC:           81.00
                   WIND VELOCITY:           25.0 KNOTS
              MANMADE NOISE MODEL:              SH
                ATMOSPHERIC NOISE:             YES
     CALCULATED GROUNDWAVE LOSS:          79.52 dB
                  REQUIRED POWER:          1.259 WATTS
                AVAILABLE POWER:         100.000 WATTS
  MAX RANGE FOR POWER OF      100.000 WATTS:       131.7 NMI
 NOTE:  RECEIVE ANTENNA GROUNDWAVE GAIN ASSUMED = 0.0 dBi
GW>
```

*** UNCLASSIFIED ***

[AREA COVERAGE] DATE: 7/ 1/86 TIME: 18:00 UT

TRANSMITTER FREQUENCY: 5.70 MHZ

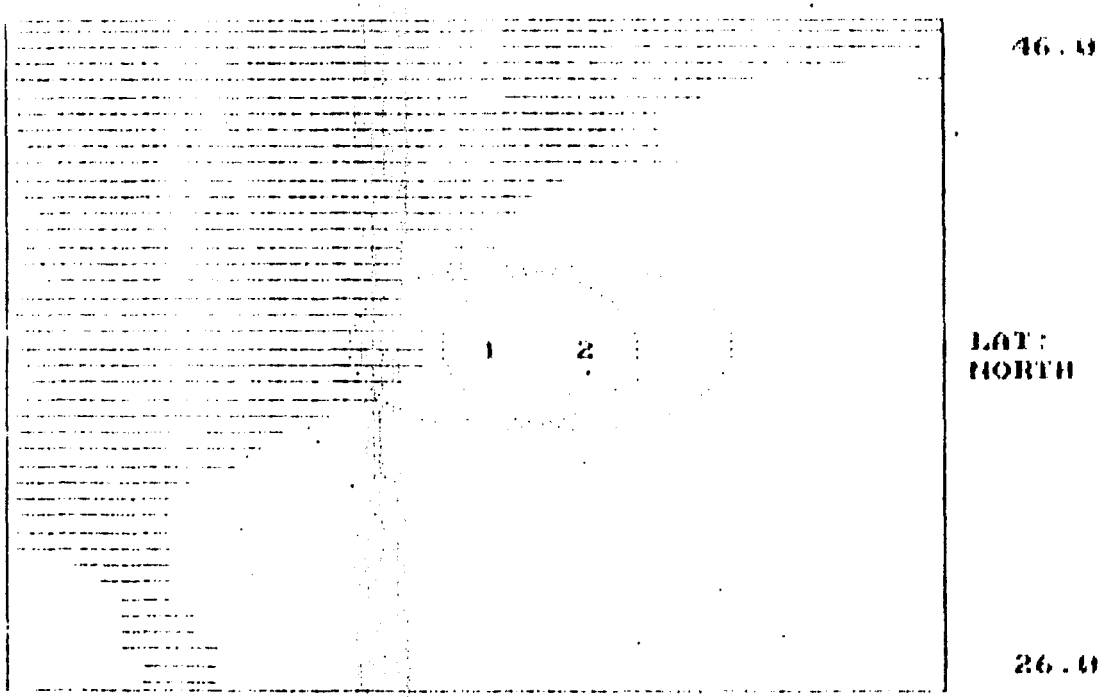

HELO1 (#1) = / HELO2 (#2) = \ BOTH = X GROUNDWAVE= .....

PAGE 1

*** UNCLASSIFIED ***

[AREA COVERAGE] DATE: 7/ 1/86 TIME: 18:00 HT

TRANSMITTER FREQUENCY: 5.70 MHZ

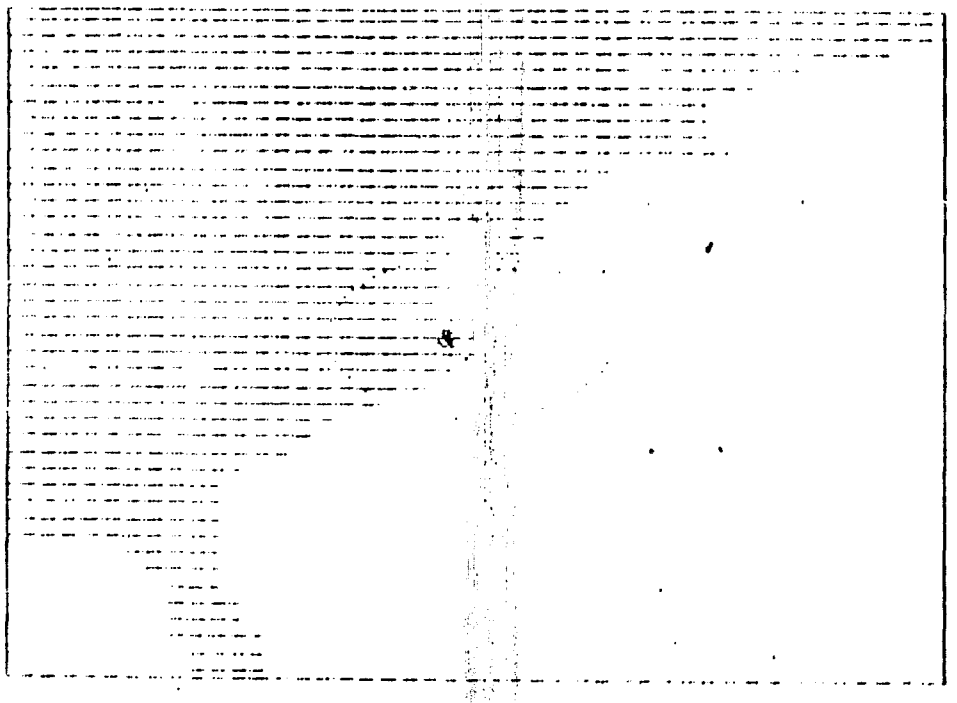

46.0

LAT: NORTH

26.0

65.0 LON: WEST 66.0

HELO4 (&), COVERAGE = X GROUNDMODE: .....

PAGE 1

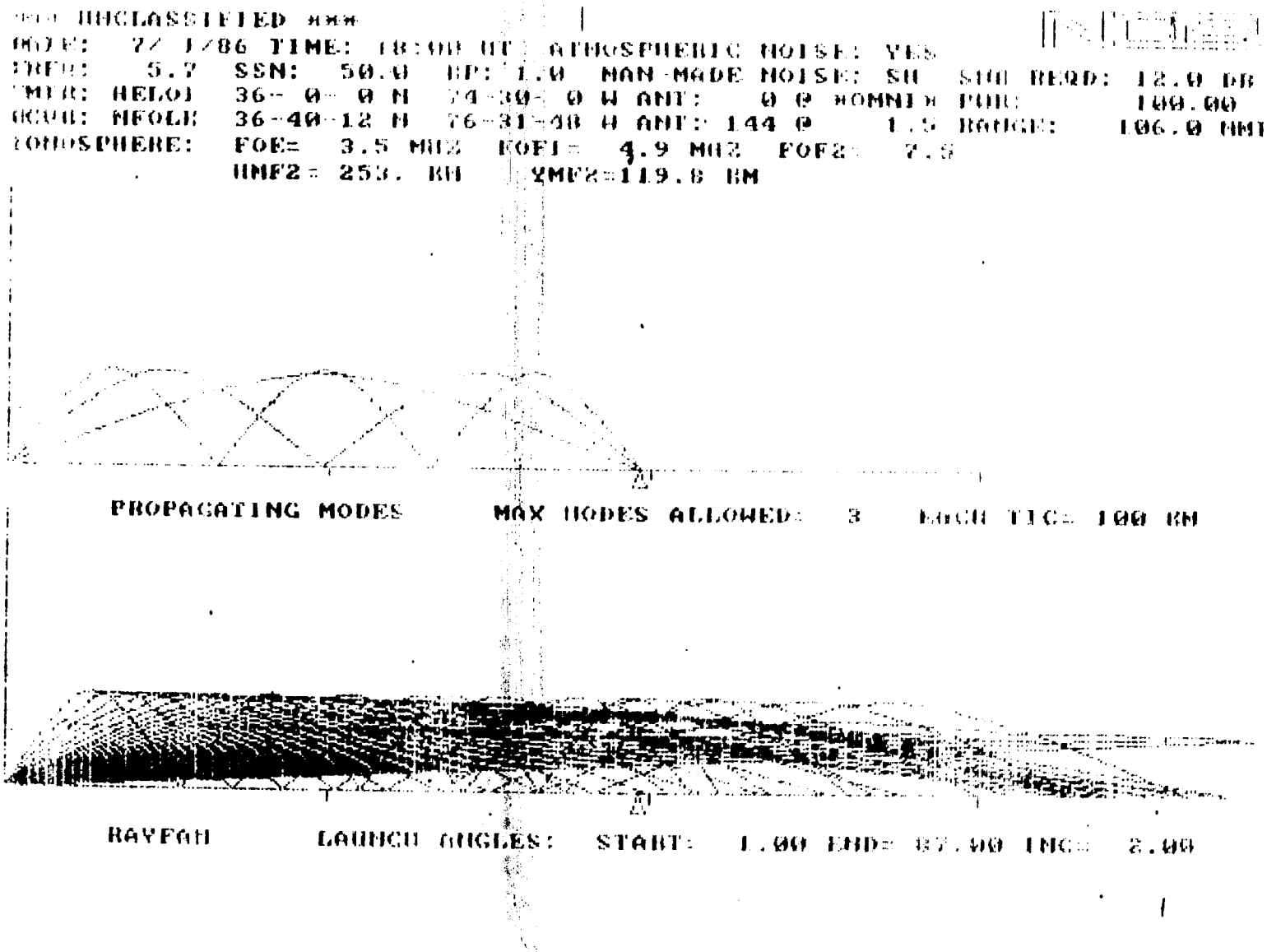
*** UNCLASSIFIED ***
DATE: 7/ 1/86 TIME: 18:00 UT ATMOSPHERIC NOISE: YES
IONO: 5.7 SSN: 50.0 BP: 1.0 MAN-MADE NOISE: SU STN REQD: 12.0 DB
XMTR: HELO1 36- 0- 0 N 74-30- 0 W ANT: 0 0 *OMNI* PWR: 100.00
RCVR: NFOLK 36-40-12 N 76-31-48 W ANT: 144 0 1.5 RANGE: 106.0 NMI
IONOSPHERE: FOE= 3.5 MHZ FOF1= 4.9 MHZ FOF2= 7.5
HMF2= 253. KM XMF2=119.8 KM
PROPAGATING MODES MAX MODES ALLOWED: 3 HIGH TIC= 100 KM
RAYFAN LAUNCH ANGLES: START: 1.00 END= 87.00 INC= 2.00

*** UNCLASSIFIED ***

ADVANCED PROPHET RAYTRACE SYNOPSIS

DATE: 7/ 1/86 TIME: 18:00 UT ATMOSPHERIC NOISE: YES BWIDTH: 2.800 KHZ
FREQ: 5.7 SSN: 50.0 KP: 1.0 MAN-MADE NOISE: SH SNR REQD: 12.0 DB
XMTR: HELO1 36- 0- 0 N 74-30- 0 W ANT: 0 @ *OMNI* PWR: 100.00
RCVR: NFOLK 36-40-12 N 76-31-48 W ANT: 144 @ 1.5 RANGE: 106.0 NMI
IONOSPHERE: FOE= 3.5 MHZ FOF1= 4.9 MHZ FOF2= 7.5
HMF2= 253. KM YMF2=119.8 KM

NHOP	1	2	3	0	0	0
MODE	3000000	3300000	3330000	0000000	0000000	0000000
ANGLE	65.30	77.55	81.70	.00	.00	.00
DELAY(MSEC)	1.619	3.144	4.703	.000	.000	.000
LOSS(DB)	119.51	146.65	169.86	.00	.00	.00
GAIN TX/RX	0/-11	0/-11	0/-13	0/ 0	0/ 0	0/ 0
1HZ SNR(DB)	37.84	10.70	-14.51	.00	.00	.00
ADJ SNR(DB)	3.37	-23.77	-48.98	.00	.00	.00
VIR HT1(KM)	222.03	231.26	233.63	.00	.00	.00
VIR HT2(KM)	.00	230.93	233.40	.00	.00	.00
VIR HT3(KM)	.00	.00	233.20	.00	.00	.00

RA>

*** UNCLASSIFIED ***

DATE: 7/ 1/86 TIME: 18:00 UT ATMOSPHERIC NOISE: YES

CHEQ: 5.7 SSN: 50.0 KP: 1.0 MAN-MADE NOISE: SR SNR REQD: 12.0 DB

XMTR: HELO2 36- 0- 0 N 72-30- 0 W ANT: 0 @ *OMNI* PWR: 100.00

RCVR: NFOLK 36-40-12 N 76-31-48 W ANT: 144 @ 1.5 RANGE: 198.9 NMI

IONOSPHERE: FOE= 3.5 MHZ FOF1= 4.9 MHZ FOF2= 7.5

HMF2= 253. KM YMF2=119.7 KM

PROPAGATING MODES MAX MODES ALLOWED= 3 EACH TIC= 100 KM

RAYFAN LAUNCH ANGLES: START= 1.00 END= 87.00 INC= 2.00

*** UNCLASSIFIED ***

ADVANCED PROPHET RAYTRACE SYNOPSIS

DATE: 7/ 1/86 TIME: 18:00 UT ATMOSPHERIC NOISE: YES BWIDTH: 2.800 KHZ
FREQ: 5.7 SSN: 50.0 KP: 1.0 MAN-MADE NOISE: SH SNR REQD: 12.0 DB
XMTR: HELO2 36- 0- 0 N 72-30- 0 W ANT: 0 @ *OMNI* PWR: 100.00
RCVR: NFOLK 36-40-12 N 76-31-48 W ANT: 144 @ 1.5 RANGE: 198.9 NMI
IONOSPHERE: FOE= 3.5 MHZ FOF1= 4.9 MHZ FOF2= 7.5
HMF2= 253. KM YMF2=119.7 KM

NHOP	1	1	1	0	0	0
MODE	1000000	1000000	2000000	0000000	0000000	0000000
ANGLE	29.90	36.80	44.45	.00	.00	.00
DELAY(MSEC)	1.443	1.537	1.768	.000	.000	.000
LOSS(DB)	135.38	149.81	123.57	.00	.00	.00
GAIN TX/RX	0/-10	0/ -8	0/ -8	0/ 0	0/ 0	0/ 0
1HZ SNR(DB)	22.98	10.55	36.79	.00	.00	.00
ADJ SNR(DB)	-11.49	-23.92	2.32	.00	.00	.00
VIR HT1(KM)	110.53	140.81	188.80	.00	.00	.00
VIR HT2(KM)	.00	.00	.00	.00	.00	.00
VIR HT3(KM)	.00	.00	.00	.00	.00	.00

RA>

*** UNCLASSIFIED ***
DATE: 7/ 1/86 TIME: 18:00 UT ATMOSPHERIC NOISE: YES
FREQ: 5.7 SSN: 50.0 KP: 1.0 MAN-MADE NOISE: SH SNR REQD: 12.0 DB
XMTR: HELO4 36 0- 0 N 76 0- 0 W ANT: 0 @ *OMNI* PWR: 100.00
RCVR: NFOLK 36 10-12 N 76-31-48 W ANT: 182 @ *OMNI* RANGE: 47.7 NMI
IONOSPHERE: FOE= 3.5 MHZ FOF1= 4.9 MHZ FOF2= 7.5
HMF2= 253. KM YMF2=119.8 KM

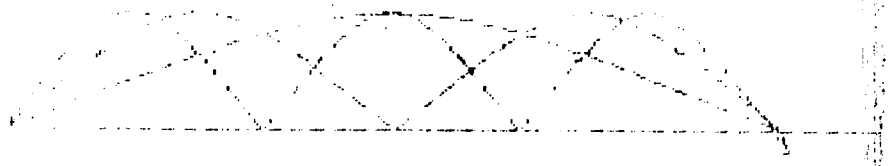

PROPAGATING MODES MAX MODES ALLOWED= 3 EACH HOP= 100 KM

RAYFAN LAUNCH ANGLES: START= 1.00 END= 82.00 INC= 2.00

*** UNCLASSIFIED ***

ADVANCED PROPHET RAYTRACE SYNOPSIS

DATE: 7/ 1/86 TIME: 18:00 UT ATMOSPHERIC NOISE: YES BWIDTH: 2.800 KHZ
FREQ: 5.7 SSN: 50.0 KP: 1.0 MAN-MADE NOISE: SH SNR REQD: 12.0 DB
XMTR: HELO4 36- 0- 0 N 76- 0- 0 W ANT: 0 @ *OMNI* PWR: 100.00
RCVR: NFOLK 36-40-12 N 76-31-48 W ANT: 182 @ *OMNI* RANGE: 47.7 NMI
IONOSPHERE: FOE= 3.5 MHZ FOF1= 4.9 MHZ FOF2= 7.5
HMF2= 253. KM YMF2=119.8 KM

NHOP	1	2	3	0	0	0
MODE	3000000	3300000	3330000	0000000	0000000	0000000
ANGLE	78.80	84.40	86.30	.00	.00	.00
DELAY(MSEC)	1.569	3.129	4.691	.000	.000	.000
LOSS(DB)	117.78	146.13	169.56	.00	.00	.00
GAIN TX/RX	0/-18	0/-40	0/-40	0/ 0	0/ 0	0/ 0
1HZ SNR(DB)	32.33	-18.03	-41.47	.00	.00	.00
ADJ SNR(DB)	-2.14	-52.50	-75.94	.00	.00	.00
VIR HT1(KM)	231.61	234.27	234.80	.00	.00	.00
VIR HT2(KM)	.00	234.21	234.75	.00	.00	.00
VIR HT3(KM)	.00	.00	234.69	.00	.00	.00

RA>

```
*** UNCLASSIFIED ***        DATE: 7/ 1  AT  18:00 UT
   GROUNDWAVE IS FROM HELO1  ON:          5.696 MHZ
    RANGE TO RECEIVER NFOLK  IS:          106.0 NMI
      TRANSMIT GROUNDWAVE GAIN:             .0 dBi
                  POLARIZATION:              V
       TRANSMIT ANTENNA HEIGHT:          500.0 FEET
        RECEIVE ANTENNA HEIGHT:             .0 FEET
            TRANSMITTER POWER:          100.0 WATTS
         REQUIRED BANDWIDTH:              2.8 KHZ
      REQUIRED SIGNAL TO NOISE:           12.0 dB
                       TERRAIN:             SE
                 SURFACE COVER:             //
           SURFACE CONDUCTIVITY:        .40E+01 MHO/M
                   DIELECTRIC:           81.00
                WIND VELOCITY:           25.0 KNOTS
          MANMADE NOISE MODEL:              SH
           ATMOSPHERIC NOISE:              YES
    CALCULATED GROUNDWAVE LOSS:          93.53 dB
               REQUIRED POWER:         15.454 WATTS
              AVAILABLE POWER:        100.000 WATTS
  MAX RANGE FOR POWER OF      100.000 WATTS:       148.7 NMI
 NOTE:  RECEIVE ANTENNA GROUNDWAVE GAIN ASSUMED = 0.0 dBi
GW>
```

```
*** UNCLASSIFIED ***        DATE: 7/ 1  AT  18:00 UT
   GROUNDWAVE IS FROM HELO2  ON:          5.696 MHZ
    RANGE TO RECEIVER NFOLK  IS:          198.9 NMI
      TRANSMIT GROUNDWAVE GAIN:             .0 dBi
                  POLARIZATION:              V
       TRANSMIT ANTENNA HEIGHT:          500.0 FEET
        RECEIVE ANTENNA HEIGHT:             .0 FEET
             TRANSMITTER POWER:          100.0 WATTS
           REQUIRED BANDWIDTH:             2.8 KHZ
       REQUIRED SIGNAL TO NOISE:            12.0 dB
                        TERRAIN:              SE
                  SURFACE COVER:              //
          SURFACE CONDUCTIVITY:         .40E+01 MHO/M
                    DIELECTRIC:           81.00
                  WIND VELOCITY:            25.0 KNOTS
           MANMADE NOISE MODEL:              SH
             ATMOSPHERIC NOISE:             YES
    CALCULATED GROUNDWAVE LOSS:          110.23 dB
                REQUIRED POWER:         723.544 WATTS
              AVAILABLE POWER:          100.000 WATTS
  ** SURFACE WAVE PROPAGATION TO RECEIVER NFOLK  UNLIKELY **
  MAX RANGE FOR POWER OF      100.000 WATTS:       148.8 NMI
 NOTE:  RECEIVE ANTENNA GROUNDWAVE GAIN ASSUMED = 0.0 dBi
GW>
```

```
SELECT DISPLAY OPTION ( A/F/P/E )
GW>a
*** UNCLASSIFIED ***          DATE: 7/ 1  AT  18:00 UT
   GROUNDWAVE IS FROM HELO4  ON:          5.696 MHZ
    RANGE TO RECEIVER NFOLK  IS:           47.7 NMI
       TRANSMIT GROUNDWAVE GAIN:             .0 dBi
                   POLARIZATION:              V
        TRANSMIT ANTENNA HEIGHT:          500.0 FEET
         RECEIVE ANTENNA HEIGHT:             .0 FEET
              TRANSMITTER POWER:          100.0 WATTS
            REQUIRED BANDWIDTH:            2.8 KHZ
      REQUIRED SIGNAL TO NOISE:           12.0 dB
                       TERRAIN:             SE
                  SURFACE COVER:             //
          SURFACE CONDUCTIVITY:        .40E+01 MHO/M
                    DIELECTRIC:          81.00
                  WIND VELOCITY:           25.0 KNOTS
           MANMADE NOISE MODEL:             SH
             ATMOSPHERIC NOISE:            YES
    CALCULATED GROUNDWAVE LOSS:          79.52 dB
                 REQUIRED POWER:           .614 WATTS
               AVAILABLE POWER:        100.000 WATTS
  MAX RANGE FOR POWER OF      100.000 WATTS:       148.7 NMI
 NOTE:  RECEIVE ANTENNA GROUNDWAVE GAIN ASSUMED = 0.0 dBi
GW>
```

*** UNCLASSIFIED ***

GROUNDWAVE ANALYSIS FOR DATE: 22 1/86 TIME: 18:00 GT

XMTR: NELO4 POLARIZATION: V POWER: 100.000 WATTS

RCVR: NFOLK FREQUENCY: 5.696 MHZ RANGE: 47.7 NMI

ANTENNA HEIGHT XMTR: 500.0 FEET RCVR: .0 FEET

TERRAIN: SE COVER: // WIND: 25.0 KNOTS ATMOSPHERIC NOISE: YES

DIELECTRIC: 81.0 SURFACE CONDUCTIVITY: .4000[illegible] MHO/M

SIGNAL SNR: 13.0 DB BANDWIDTH: 2.800 KHZ MANMADE NOISE: SH

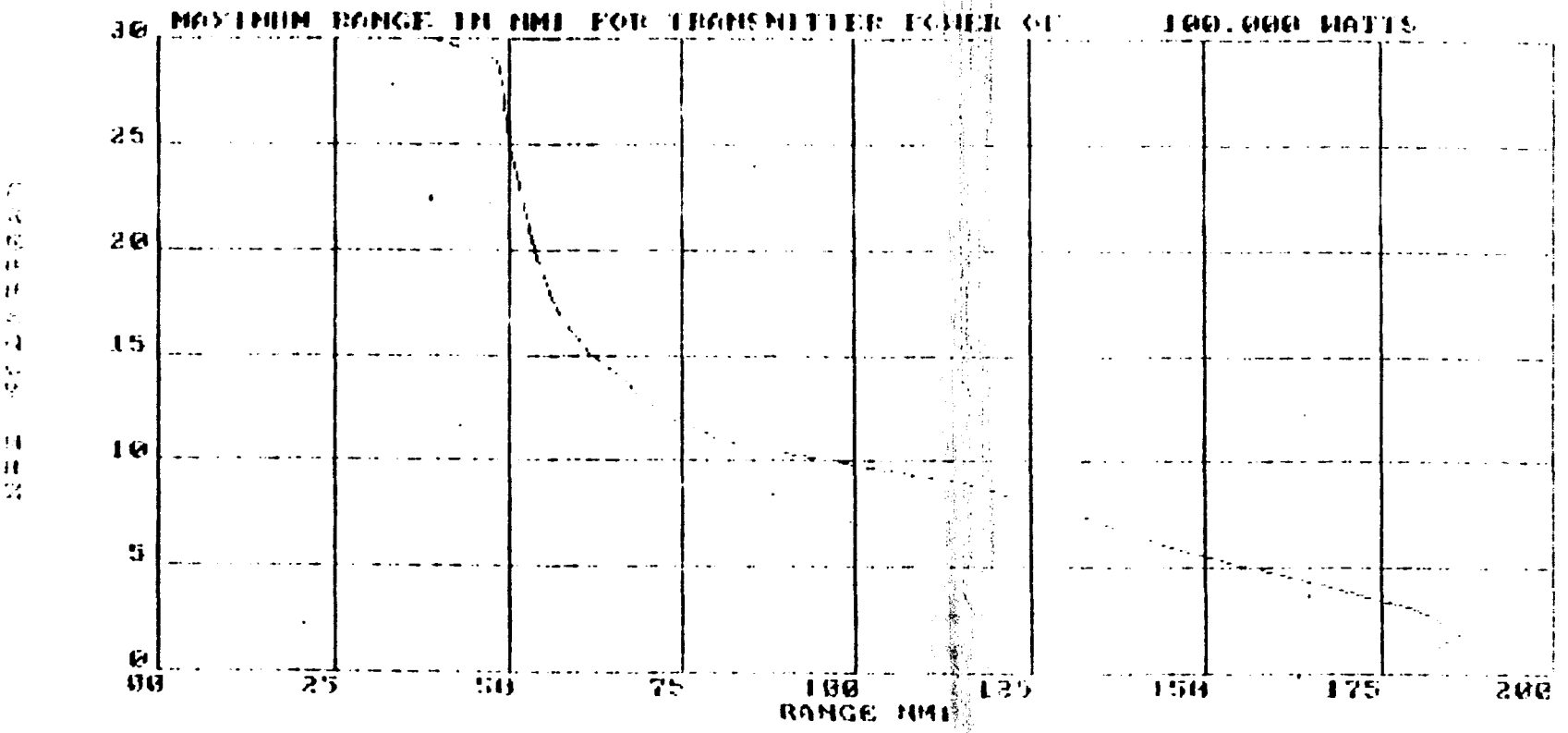

*** UNCLASSIFIED ***

AREA COVERAGE 3 DATE: 27 FEB 86 TIME: 18:00 GT

TRANSMITTER FREQUENCY: 8.98 MHZ

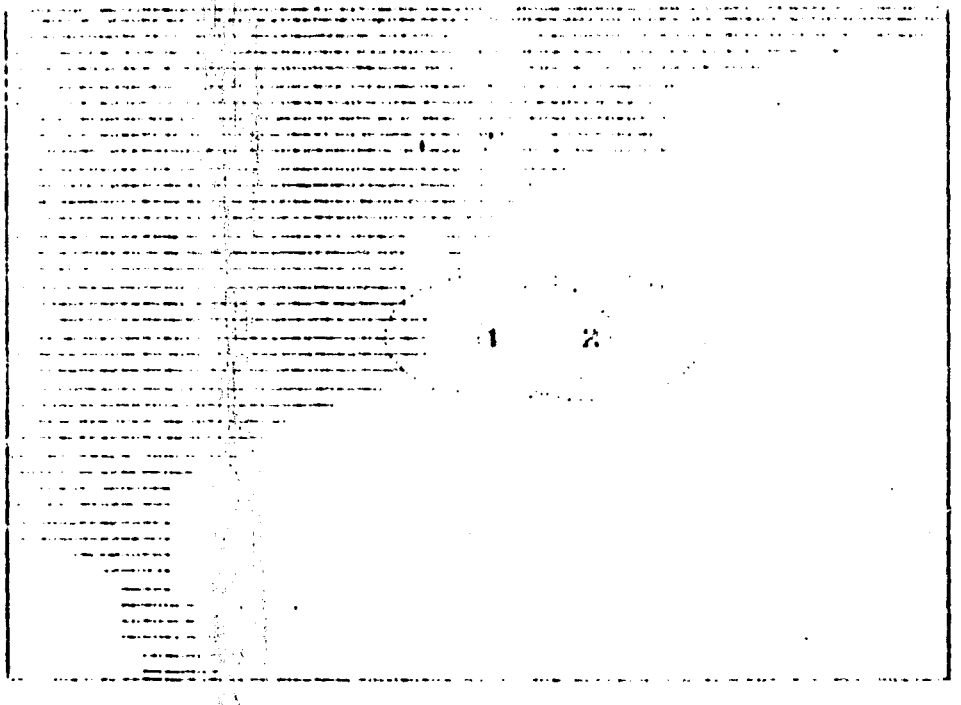

65.0 LON: WEST 65.0

DET 01 (#1) = / HELO2 (#2) = \ BOTH = X GROUNDWAVE = ...

370

*** UNCLASSIFIED ***

[AREA COVERAGE] DATE: 7/ 1/86 TIME: 18:00 HI

TRANSMITTER FREQUENCY: 8.98 MHZ

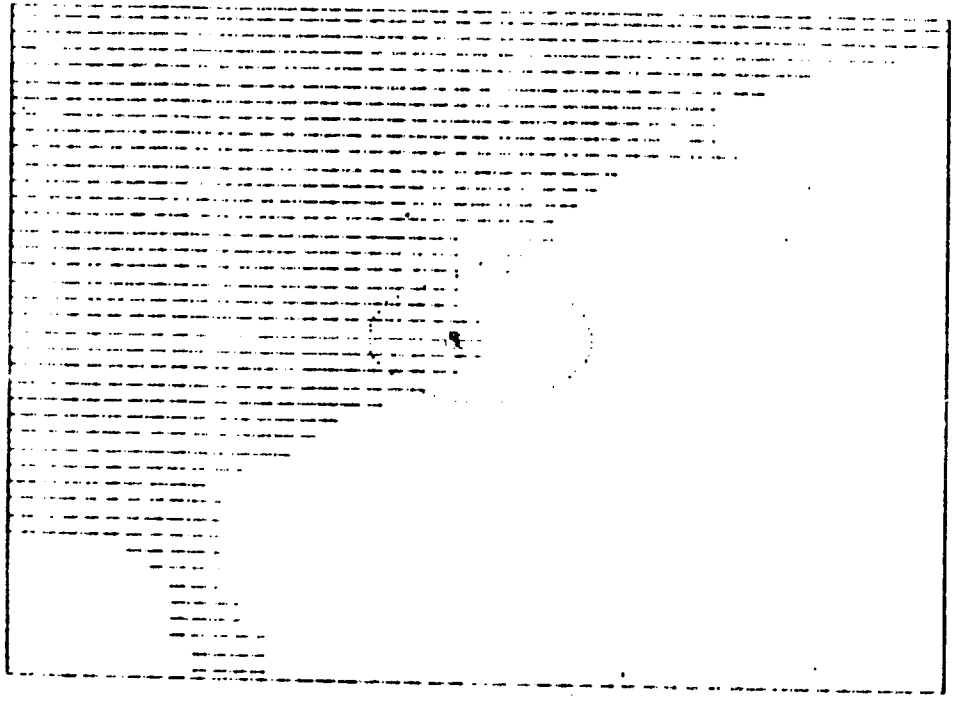

46.0

LAT:
NORTH

26.0

86.0 LON: WEST 66.0

HELO4 (&) COVERAGE = X

GROUNDHOUSE

PAGE 1

371

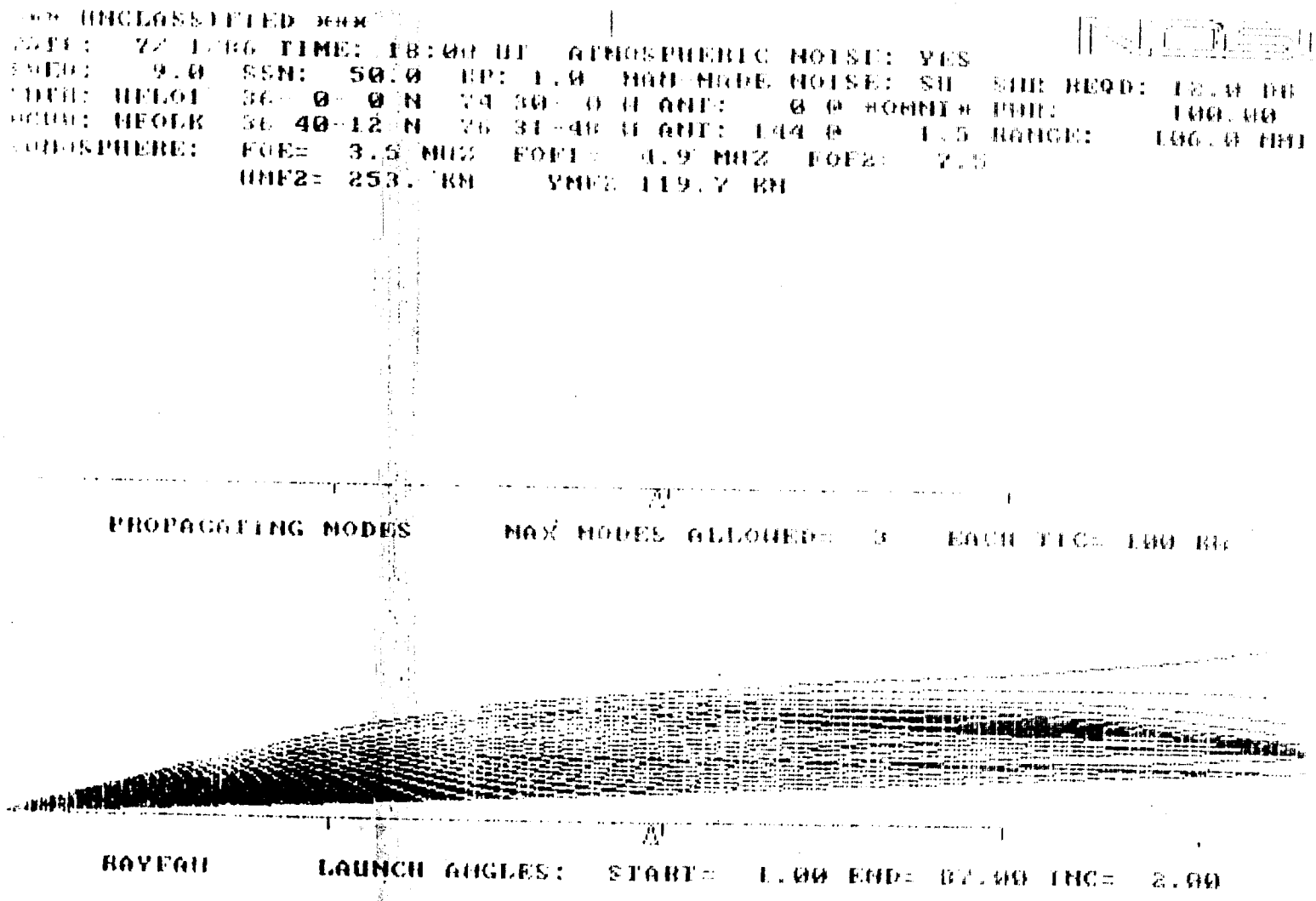
*** UNCLASSIFIED ***
TIME: 18:00 UT ATMOSPHERIC NOISE: YES
9.0 SSN: 50.0 BP: 1.0 MAN MADE NOISE: SU SNR REQD: 12.0 DB
HFLO1 36 0 0 N 74 30 0 W ANT: 0 0 *OMNI* PWR: 100.00
HFOLK 36 40-12 N 76 31-48 W ANT: 144 0 1.5 RANGE: 106.0 NMI
IONOSPHERE: FOE= 3.5 MHZ FOF1= 4.9 MHZ FOF2= 7.5
HMF2= 253. KM YMF2 119.7 KM
PROPAGATING MODES MAX MODES ALLOWED= 3 EACH TIC= 100 KM
RAYFAN LAUNCH ANGLES: START= 1.00 END= 87.00 INC= 2.00

*** UNCLASSIFIED ***
DTG: 7/ 1/86 TIME: 18:00 UT ATMOSPHERIC NOISE: YES
RCVR: 9.0 SSN: 50.0 KP: 1.0 MAN MADE NOISE: SR SNR REQD: 12.0 DB
XMTR: NELO2 36- 0 0 N 72 30 0 W ANT: 0 @ OMNI POR: 100.00
CVR: NFOLK 36 40 12 N 76 31 48 W ANT: 144 @ 1.5 RANGE: 198.9 NMI
IONOSPHERE: FOE= 3.5 MHZ FOF1= 4.9 MHZ FOF2= 7.5
HMF2= 254. KM YMF2=119.6 KM

PROPAGATING MODES MAX MODES ALLOWED= 3 EACH ITS= 100 KM

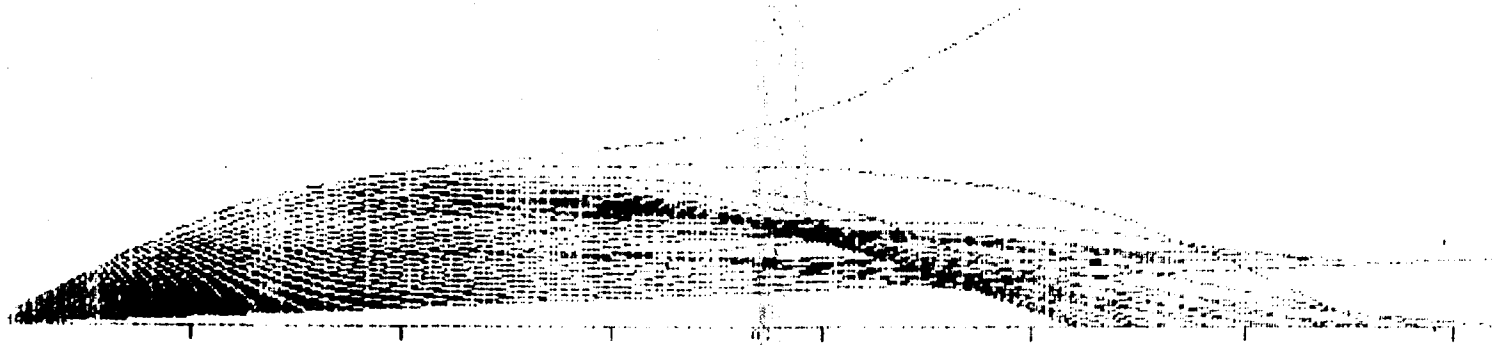

RAYFAN LAUNCH ANGLES: START= 1.00 END= 87.00 INC= 2.00

```
*** UNCLASSIFIED ***
DATE:  7/ 1/86 TIME: 18:00 UT  ATMOSPHERIC NOISE: YES
FREQ:    9.0   SSN:   50.0   KP: 1.0   MAN-MADE NOISE: SU   SNR REQD: 12.0 DB
XMTR: HELO1   36- 0- 0 N  76- 0- 0 W ANT:   0.0 *OMNI* PWR:       100.00
RCVR: NFOLK   36-40-12 N  76-31-48 W ANT: 182.0 *OMNI* RANGE:     47.7 NMI
IONOSPHERE:   FOE=  3.5 MHZ  FOF1=  4.9 MHZ  FOF2=  7.3
              HMF2= 252. KM    YMF2=119.7 KM
```

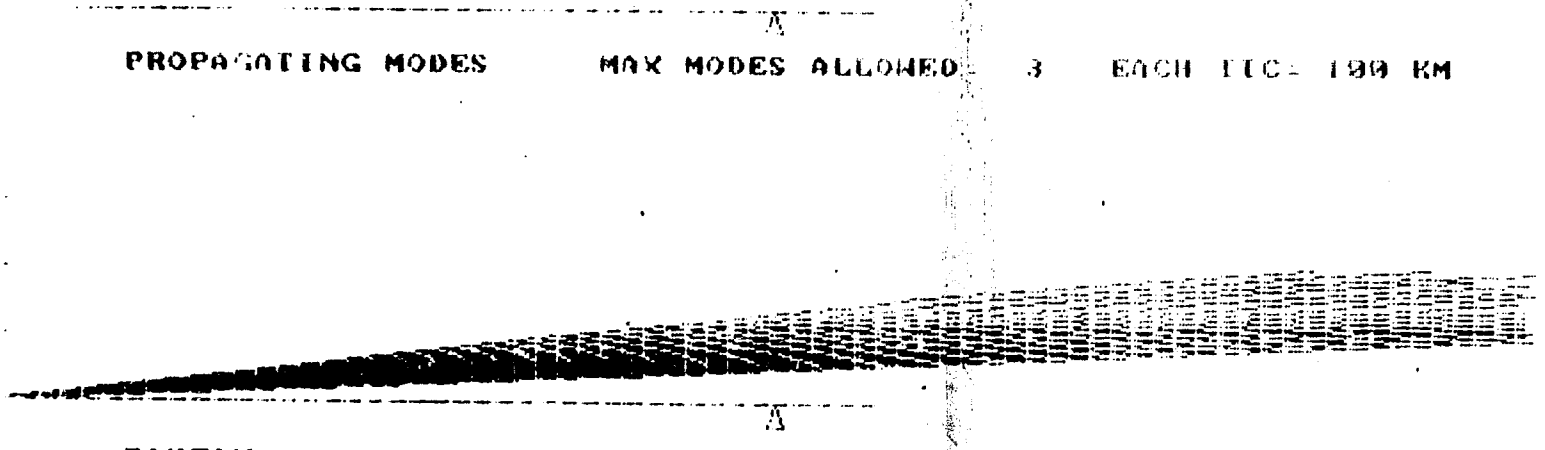

```
*** UNCLASSIFIED ***        DATE: 7/ 1  AT  18:00 UT
   GROUNDWAVE IS FROM HELO1  ON:          8.984 MHZ
    RANGE TO RECEIVER NFOLK  IS:          106.0 NMI
      TRANSMIT GROUNDWAVE GAIN:             .0 dBi
                   POLARIZATION:              V
       TRANSMIT ANTENNA HEIGHT:          500.0 FEET
        RECEIVE ANTENNA HEIGHT:             .0 FEET
             TRANSMITTER POWER:          100.0 WATTS
          REQUIRED BANDWIDTH:             2.8 KHZ
       REQUIRED SIGNAL TO NOISE:          12.0 dB
                        TERRAIN:             SE
                  SURFACE COVER:              //
          SURFACE CONDUCTIVITY:         .40E+01 MHO/M
                   DIELECTRIC:           81.00
                 WIND VELOCITY:          25.0 KNOTS
           MANMADE NOISE MODEL:             SH
             ATMOSPHERIC NOISE:            YES
     CALCULATED GROUNDWAVE LOSS:         104.59 dB
                 REQUIRED POWER:         57.389 WATTS
               AVAILABLE POWER:         100.000 WATTS
  MAX RANGE FOR POWER OF      100.000 WATTS:      115.1 NMI
 NOTE:  RECEIVE ANTENNA GROUNDWAVE GAIN ASSUMED = 0.0 dBi
GW>
```

```
*** UNCLASSIFIED ***        DATE: 7/ 1  AT  18:00 UT
   GROUNDWAVE IS FROM HELO2  ON:          8.984 MHZ
    RANGE TO RECEIVER NFOLK  IS:          198.9 NMI
      TRANSMIT GROUNDWAVE GAIN:             .0 dBi
                  POLARIZATION:              V
       TRANSMIT ANTENNA HEIGHT:          500.0 FEET
        RECEIVE ANTENNA HEIGHT:             .0 FEET
             TRANSMITTER POWER:          100.0 WATTS
          REQUIRED BANDWIDTH:              2.8 KHZ
       REQUIRED SIGNAL TO NOISE:           12.0 dB
                       TERRAIN:              SE
                  SURFACE COVER:              //
            SURFACE CONDUCTIVITY:        .40E+01 MHO/M
                    DIELECTRIC:           81.00
                  WIND VELOCITY:           25.0 KNOTS
             MANMADE NOISE MODEL:              SH
              ATMOSPHERIC NOISE:             YES
     CALCULATED GROUNDWAVE LOSS:         127.36 dB
                 REQUIRED POWER:      10841.040 WATTS
               AVAILABLE POWER:         100.000 WATTS
  ** SURFACE WAVE PROPAGATION TO RECEIVER NFOLK  UNLIKELY **
  MAX RANGE FOR POWER OF      100.000 WATTS:       115.2 NMI
 NOTE:  RECEIVE ANTENNA GROUNDWAVE GAIN ASSUMED = 0.0 dBi
GW>
```

```
SELECT DISPLAY OPTION ( A/F/P/E )
GW>a
*** UNCLASSIFIED ***        DATE: 7/ 1  AT  18:00 UT
   GROUNDWAVE IS FROM HELO4  ON:          8.984 MHZ
    RANGE TO RECEIVER NFOLK  IS:           47.7 NMI
       TRANSMIT GROUNDWAVE GAIN:             .0 dBi
                    POLARIZATION:              V
        TRANSMIT ANTENNA HEIGHT:          500.0 FEET
         RECEIVE ANTENNA HEIGHT:             .0 FEET
              TRANSMITTER POWER:          100.0 WATTS
           REQUIRED BANDWIDTH:             2.8 KHZ
      REQUIRED SIGNAL TO NOISE:            12.0 dB
                       TERRAIN:              SE
                  SURFACE COVER:              //
         SURFACE CONDUCTIVITY:          .40E+01 MHO/M
                    DIELECTRIC:           81.00
                WIND VELOCITY:            25.0 KNOTS
            MANMADE NOISE MODEL:              SH
              ATMOSPHERIC NOISE:             YES
    CALCULATED GROUNDWAVE LOSS:           86.77 dB
                REQUIRED POWER:            .949 WATTS
              AVAILABLE POWER:          100.000 WATTS
  MAX RANGE FOR POWER OF      100.000 WATTS:       115.1 NMI
 NOTE:  RECEIVE ANTENNA GROUNDWAVE GAIN ASSUMED = 0.0 dBi
GW>
```

APPENDIX C
NEC MODELS

FILE: H65 DATA A1

```
CM H65 IGUANA DATA, INCLUDE GW310 ON TAIL
CM GREEN'S FUNCTION FOR HELICOPTER
CM CREATED 8/3/87
**********************************CM FREE SPACE
**********************************CM FREQ = 18.1 MHZ
CE
GW1,1,2.084089,5.784055,.262175,2.084089,5.784055,.5584964,.0254,
GW2,1,2.084089,5.784055,.262175,2.084089,6.174135,.262175,.0254,
GW3,2,2.084089,5.784055,.262175,2.826628,5.275332,0.,.0254,
GW4,1,2.084089,5.784055,.5584964,2.084089,6.174135,.5584964,.0254,
GW5,2,2.084089,5.784055,.5584964,2.826628,5.275332,.8704442,.0254,
GW6,1,2.084089,6.174135,.262175,2.084089,6.174135,.5584964,.0254,
GW7,2,2.084089,6.174135,.262175,2.826628,6.670126,0.,.0254,
GW8,2,2.084089,6.174135,.5584964,2.826628,6.670126,.8704442,.0254,
GW9,2,2.826628,5.275332,0.,2.826628,5.275332,.8704442,.0254,
GW10,1,2.826628,5.275332,0.,2.826628,5.936846,0.,.0254,
GW11,2,2.826628,5.275332,0.,3.718487,5.128907,1.562632E-02,.0254,
GW12,3,2.826628,5.275332,.8704442,2.826628,6.670126,.8704442,.0254,
GW13,2,2.826628,6.670126,0.,2.826628,6.670126,.8704442,.0254,
GW14,2,2.826628,6.670126,.8704442,3.728325,6.876162,1.590991,.0254,
GW15,1,3.728325,5.275332,1.590991,3.728325,5.784055,1.590991,.0254,
GW16,2,2.826628,5.275332,.8704442,3.728325,5.275332,1.590991,.0254,
GW17,1,4.782813,5.784055,1.759408,4.782813,5.784055,1.902939,.0254,
GW18,1,4.782813,5.784055,1.759408,5.126013,5.784055,1.759408,.0254,
GW19,1,4.782813,5.784055,1.902939,5.126013,5.784055,2.140228,.0254,
GW20,1,4.782813,6.077483,1.759408,4.782813,6.077483,1.902939,.0254,
GW21,1,4.782813,6.077483,1.759408,5.126013,6.077483,1.759408,.0254,
GW22,1,4.782813,6.077483,1.902939,5.126013,6.077483,2.140228,.0254,
GW23,2,5.126013,4.901457,1.759408,6.089637,5.029362,1.722368,.0254,
GW24,1,5.126013,5.128907,1.759408,5.425229,5.1509,1.743782,.0254,
GW25,1,5.126013,5.275332,2.140228,5.425229,5.275332,2.685992,.0254,
GW26,1,5.126013,6.670126,2.140228,5.425229,6.670126,2.685992,.0254,
GW27,1,5.126013,6.876162,1.759408,5.425229,6.841436,1.743782,.0254,
GW28,2,5.126013,7.072359,1.759408,6.080377,6.923041,1.718896,.0254,
GW29,1,5.126013,5.128907,1.759408,5.126013,5.53114,1.759408,.0254,
GW30,1,5.126013,5.784055,1.759408,5.126013,6.077483,1.759408,.0254,
GW31,2,5.126013,6.077483,1.759408,5.126013,6.876162,1.759408,.0254,
GW32,1,4.782813,5.784055,1.759408,4.782813,6.077483,1.759408,.0254,
GW33,1,4.782813,5.784055,1.902939,4.782813,6.077483,1.902939,.0254,
GW34,1,5.126013,6.077483,1.759408,5.126013,6.077483,2.140228,.0254,
GW35,1,5.126013,5.784055,2.140228,5.126013,6.077483,2.140228,.0254,
GW36,1,5.126013,5.784055,1.759408,5.126013,5.784055,2.140228,.0254,
GW37,1,5.425229,5.275332,2.685992,5.425229,5.977359,2.685992,.0254,
GW38,3,5.126013,5.275332,2.140228,5.126013,6.670126,2.140228,.0254,
GW39,1,5.126013,6.670126,2.140228,5.126013,6.876162,1.759408,.0254,
GW40,1,5.126013,6.876162,1.759408,5.126013,7.072359,1.759408,.0254,
GW41,1,5.126013,5.128907,1.759408,5.126013,5.275332,2.140228,.0254,
GW42,1,5.126013,4.901457,1.759408,5.126013,5.128907,1.759408,.0254,
GW43,1,5.425229,5.275332,2.685992,6.093109,5.393976,2.685992,.0254,
GW44,1,5.425229,6.670126,2.685992,6.102369,6.539328,2.685992,.0254,
GW45,2,7.009854,5.553133,2.685992,7.583976,5.653257,2.140228,.0254,
GW46,2,7.009854,6.364544,2.685992,7.583976,6.174135,2.140228,.0254,
GW47,2,9.349752,5.453588,.4022332,10.09229,5.550239,.5336101,.0254,
GW48,2,9.349752,6.411423,.4022332,10.0865,6.295673,.5336101,.0254,
GW49,1,10.51999,4.339489,.5584964,10.65715,4.339489,.262175,.0254,
GW50,1,10.51999,4.339489,.5584964,10.87245,4.339489,1.016869,.0254,
GW51,1,10.51999,7.55909,.5584964,10.65715,7.55909,.262175,.0254,
GW52,1,10.65715,4.339489,.262175,11.11553,4.339489,.355933,.0254,
GW53,1,10.65715,7.55909,.262175,11.11553,7.55909,.355933,.0254,
GW54,3,10.87245,4.339489,1.016869,10.87245,5.653257,1.016869,.0254,
GW55,1,10.87245,4.339489,1.016869,11.30594,4.339489,1.590991,.0254,
GW56,1,10.87245,4.339489,1.016869,11.44021,4.339489,1.016869,.0254,
GW57,1,10.87245,5.653257,1.016869,10.87245,5.653257,.6707745,.0254,
GW58,1,10.87245,5.653257,.6707745,11.44021,5.784055,.7645325,.0254,
GW59,1,10.87245,5.653257,1.016869,10.87245,5.653257,1.413314,.0254,
GW60,1,10.87245,5.653257,1.016869,11.44021,5.784055,1.016869,.0254,
GW61,1,10.87245,5.653257,1.413314,11.44021,5.784055,1.413314,.0254,
GW62,1,10.87245,6.174135,.6707745,10.87245,6.174135,1.016869,.0254,
GW63,1,10.87245,6.174135,.6707745,11.44021,6.174135,.7645325,.0254,
GW64,1,10.87245,6.174135,1.016869,10.87245,6.174135,1.413314,.0254,
GW65,3,10.87245,6.174135,1.016869,10.87245,7.55909,1.016869,.0254,
GW66,1,10.87245,6.174135,1.016869,11.44021,6.174135,1.016869,.0254,
```

FILE: H65 DATA A1

```
GW67,1,10.87245,6.174135,1.413314,11.44021,6.174135,1.413314,.0254,
GW68,1,10.87245,7.55909,1.016869,11.44021,7.55909,1.016869,.0254,
GW69,1,11.11553,4.339489,.355933,11.44021,4.339489,1.016869,.0254,
GW70,1,11.30594,4.339489,1.590991,11.70527,4.339489,1.590991,.0254,
GW71,1,11.30594,7.55909,1.590991,11.70527,7.55909,1.590991,.0254,
GW72,3,11.44021,4.339489,1.016869,11.44021,5.784055,1.016869,.0254,
GW73,1,11.44021,4.339489,1.016869,11.70527,4.339489,1.590991,.0254,
GW74,1,11.44021,5.784055,.7645325,11.44021,5.784055,1.016869,.0254,
GW75,1,11.44021,5.784055,.7645325,11.70527,5.784055,.6331555,.0254,
GW76,1,11.44021,5.784055,1.016869,11.44021,5.784055,1.413314,.0254,
GW77,1,11.44021,6.174135,.7645325,11.44021,6.174135,1.016869,.0254,
GW78,1,11.44021,6.174135,.7645325,11.70527,6.174135,.6331555,.0254,
GW79,1,11.44021,6.174135,1.016869,11.44021,6.174135,1.413314,.0254,
GW80,3,11.44021,6.174135,1.016869,11.44021,7.55909,1.016869,.0254,
GW81,1,10.87245,7.55909,1.016869,11.30594,7.55909,1.590991,.0254,
GW82,1,10.51999,7.55909,.5584964,10.87245,7.55909,1.016869,.0254,
GW83,1,11.44021,7.55909,1.016869,11.70527,7.55909,1.590991,.0254,
GW84,1,11.11553,7.55909,.355933,11.44021,7.55909,1.016869,.0254,
GW85,1,10.87245,5.653257,1.413314,10.87245,5.927586,1.413314,.0254,
GW86,1,11.44021,5.784055,.7645325,11.44021,6.174135,.7645325,.0254,
GW87,1,10.87245,5.653257,.6707745,10.87245,5.940319,.6707745,.0254,
GW88,2,11.8679,5.933952,2.162221,12.68163,5.933952,2.162221,.0254,
GW89,1,11.8679,5.933952,2.162221,12.21863,5.933952,2.70046,.0254,
GW90,1,12.04558,6.174135,.4618447,12.48543,6.174135,.4618447,.0254,
GW91,1,12.48543,5.784055,.4618447,13.04682,5.784055,.5584964,.0254,
GW92,1,12.48543,6.174135,.4618447,13.04682,6.174135,.5584964,.0254,
GW93,1,13.69271,5.784055,1.144773,13.69271,6.174135,1.144773,.0254,
GW94,2,13.04682,5.784055,.5584964,13.69271,5.784055,1.144773,.0254,
GW95,2,13.04682,6.174135,.5584964,13.69271,6.174135,1.144773,.0254,
GW96,1,13.04682,5.784055,.5584964,13.04682,6.174135,.5584964,.0254,
GW97,2,13.47105,5.933952,2.162221,13.69271,5.784055,1.144773,.0254,
GW98,2,13.47105,5.933952,2.162221,13.69271,6.174135,1.144773,.0254,
GW99,2,13.47105,5.933952,2.162221,13.63773,5.821674,3.249118,.0254,
GW100,2,12.74414,5.933952,3.506663,13.69271,5.784055,3.609681,.0254,
GW101,1,11.70527,6.174135,.6331555,12.04558,6.174135,.4618447,.0254,
GW102,2,11.44021,5.784055,1.413314,11.8679,5.933952,2.162221,.0254,
GW103,2,11.44021,6.174135,1.413314,11.8679,5.933952,2.162221,.0254,
GW104,2,7.009854,5.147427,7.813162E-02,7.787118,5.250445,.1869372,.0254,
GW105,2,7.009854,6.77951,7.813162E-02,7.790012,6.657393,.1840434,.0254,
GW106,1,5.425229,5.1509,1.743782,6.102369,5.241185,1.716002,.0254,
GW107,1,7.009854,5.553133,2.685992,7.009854,5.958839,2.685992,.0254,
GW108,1,7.583976,5.653257,2.140228,7.583976,6.174135,2.140228,.0254,
GW109,1,5.425229,6.841436,1.743782,6.080377,6.732631,1.718896,.0254,
GW110,1,5.126013,5.784055,1.759408,5.126013,5.53114,1.759408,.0254,
GW111,3,3.728325,6.876162,1.590991,5.126013,7.072359,1.759408,.0254,
GW112,1,7.583976,6.174135,2.140228,7.796379,6.145776,2.074829,.0254,
GW113,1,7.583976,5.653257,2.140228,7.802745,5.687404,2.071356,.0254,
GW114,2,2.826628,6.670126,0.,3.731219,6.795137,1.562632E-02,.0254,
GW115,3,3.728325,5.275332,1.590991,5.126013,4.901457,1.759408,.0254,
GW116,1,7.583976,6.174135,2.140228,7.384307,6.383064,2.140228,.0254,
GW117,1,7.583976,5.653257,2.140228,7.394146,5.48484,2.140228,.0254,
GW118,1,7.394146,5.48484,2.140228,7.412665,5.415968,1.666229,.0254,
GW119,1,7.394146,5.48484,2.140228,7.000594,5.443749,2.140228,.0254,
GW120,1,7.384307,6.383064,2.140228,7.000594,6.439203,2.140228,.0254,
GW121,1,5.126013,5.275332,2.140228,5.4941,5.310057,2.140228,.0254,
GW122,1,5.126013,6.670126,2.140228,5.496994,6.623247,2.140228,.0254,
GW123,2,7.000594,5.443749,2.140228,6.083849,5.362723,2.140228,.0254,
GW124,2,7.000594,6.439203,2.140228,6.077483,6.551481,2.140228,.0254,
GW125,1,7.384307,6.383064,2.140228,7.384307,6.520229,1.669123,.0254,
GW126,2,5.126013,7.072359,1.759408,5.135274,7.028953,.8675504,.0254,
GW127,2,5.126013,4.901457,1.759408,5.1509,4.926343,.8733379,.0254,
GW128,1,3.728325,5.275332,1.590991,3.724853,5.209932,.8831767,.0254,
GW129,3,3.718487,5.128907,1.562632E-02,5.172314,4.947758,.0405127,.0254,
GW130,2,7.009854,5.147427,7.813162E-02,6.093109,5.047882,.05903278,.0254
GW131,3,3.731219,6.795137,1.562632E-02,5.144534,6.98844,.0405127,.0254,
GW132,1,3.728325,6.876162,1.590991,3.728325,6.838543,.8831767,.0254,
GW133,2,3.718487,5.128907,1.562632E-02,3.724853,5.953952,.01562632,.0254
GW134,2,5.144534,6.98844,.0405127,5.16016,5.952472,.0405127,.0254,
GW135,2,7.009854,6.77951,7.813162E-02,6.098897,6.881949,.05903278,.0254
GW136,2,7.009854,5.147427,7.813162E-02,7.009854,5.927586,.07813162,.02554
GW137,2,7.009854,6.77951,7.813162E-02,7.009854,6.77951,.8704442,.0254,
GW138,2,7.009854,5.147427,7.813162E-02,7.00696,5.147427,.8640779,.0254,
```

FILE: H65 DATA A1

```
GW139,1,9.349752,5.453588,.4022332,9.349752,5.453588,.8675504,.0254,
GW140,1,9.349752,5.453588,.4022332,9.349752,5.936846,.4022332,.0254,
GW141,1,9.349752,6.411423,.4022332,9.353224,6.411423,.8704442,.0254,
GW142,2,10.87245,5.653257,1.413314,10.0894,5.550239,1.47582,.0254,
GW143,2,10.87245,6.174135,1.413314,10.0865,6.295673,1.47582,.0254,
GW144,1,9.349752,5.933952,1.590991,9.349752,5.453588,1.534852,.0254,
GW145,1,9.349752,5.933952,1.590991,9.356117,6.411423,1.534852,.0254,
GW146,1,10.0865,6.295673,.5336101,10.0894,5.940319,.5336101,.0254,
GW147,2,10.0865,6.295673,.5336101,10.87245,6.174135,.6707745,.0254,
GW148,1,10.0865,6.295673,1.47582,9.356117,6.411423,1.534852,.0254,
GW149,1,10.0865,6.295673,.5336101,10.0865,6.295673,.8640779,.0254,
GW150,1,10.0894,5.550239,1.47582,9.349752,5.453588,1.534852,.0254,
GW151,1,10.09229,5.550239,.5336101,10.09229,5.550239,.8704442,.0254,
GW152,1,10.0865,6.295673,1.47582,10.0865,5.946106,1.47582,.0254,
GW153,2,9.349752,5.453588,.4022332,8.585797,5.353463,.2963214,.0254,
GW154,2,9.349752,5.453588,1.534852,8.573065,5.353463,1.588098,.0254,
GW155,1,7.787118,5.250445,.1869372,7.787118,5.250445,.8768104,.0254,
GW156,2,7.787118,5.250445,.1869372,8.585797,5.353463,.2963214,.0254,
GW157,2,8.573065,5.353463,1.588098,7.790012,5.250445,1.644237,.0254,
GW158,1,8.585797,5.353463,.2963214,8.579432,5.353463,.8704442,.0254,
GW159,2,9.356117,6.411423,1.534852,8.576537,6.532961,1.590991,.0254,
GW160,2,9.349752,6.411423,.4022332,8.570171,6.532961,.2934277,.0254,
GW161,1,8.585797,5.353463,.2963214,8.576537,5.955945,.2934277,.0254,
GW162,1,7.790012,6.657393,.1840434,8.10659,6.607042,.2286073,.0254,
GW163,1,7.787118,5.250445,.1869372,7.787118,5.940319,.1869372,.0254,
GW164,1,8.576537,6.532961,1.590991,8.573065,6.532961,.8640779,.0254,
GW165,1,8.576537,6.532961,1.590991,8.112378,6.605884,1.622244,.0254,
GW166,1,7.790012,6.657393,.1840434,7.790012,6.657393,.8733379,.0254,
GW167,2,9.349752,5.933952,1.590991,8.548179,5.709396,1.622244,.0254,
GW168,1,8.573065,5.353463,1.588098,8.548179,5.709396,1.622244,.0254,
GW169,2,9.349752,5.933952,1.590991,8.573065,5.808942,1.834646,.0254,
GW170,1,8.548179,5.709396,1.622244,8.573065,5.808942,1.834646,.0254,
GW171,2,9.349752,5.933952,1.590991,8.566699,6.039864,1.834646,.0254,
GW172,1,8.573065,5.808942,1.834646,8.566699,6.039864,1.834646,.0254,
GW173,2,9.349752,5.933952,1.590991,8.566699,6.180501,1.622244,.0254,
GW174,1,8.576537,6.532961,1.590991,8.566699,6.180501,1.622244,.0254,
GW175,1,8.566699,6.039864,1.834646,8.566699,6.180501,1.622244,.0254,
GW176,2,7.790012,5.250445,1.644237,7.000594,5.147427,1.684749,.0254,
GW177,2,7.787118,6.657393,1.644237,7.009854,6.77951,1.681277,.0254,
GW178,2,8.548179,5.709396,1.622244,7.796379,5.496994,1.650603,.0254,
GW179,1,7.790012,5.250445,1.644237,7.796379,5.496994,1.650603,.0254,
GW180,2,7.802745,5.687404,2.071356,8.573065,5.808942,1.834646,.0254,
GW181,1,7.802745,5.687404,2.071356,7.796379,5.496994,1.650603,.0254,
GW182,2,7.796379,6.145776,2.074829,8.566699,6.039864,1.834646,.0254,
GW183,1,7.796379,6.145776,2.074829,7.802745,5.687404,2.071356,.0254,
GW184,2,8.566699,6.180501,1.622244,7.787118,6.426471,1.653497,.0254,
GW185,1,7.796379,6.145776,2.074829,7.787118,6.426471,1.653497,.0254,
GW186,1,7.787118,6.657393,1.644237,7.787118,6.426471,1.653497,.0254,
GW187,1,7.412665,5.415968,1.666229,7.796379,5.496994,1.650603,.0254,
GW188,1,7.384307,6.520229,1.669123,7.787118,6.426471,1.653497,.0254,
GW189,1,7.384307,6.520229,1.669123,7.01622,6.57984,1.684749,.0254,
GW190,1,7.009854,6.77951,1.681277,7.01622,6.57984,1.684749,.0254,
GW191,1,7.000594,6.439203,2.140228,7.01622,6.57984,1.684749,.0254,
GW192,1,7.412665,5.415968,1.666229,7.009854,5.362723,1.681277,.0254,
GW193,1,7.000594,5.443749,2.140228,7.009854,5.362723,1.681277,.0254,
GW194,1,7.000594,5.147427,1.684749,7.009854,5.362723,1.681277,.0254,
GW195,2,5.144534,6.98844,.0405127,6.098897,6.881949,5.903278E-02,.0254,
GW196,2,6.080377,6.923041,1.718896,7.009854,6.77951,1.681277,.0254,
GW197,2,6.098897,6.881949,5.903278E-02,6.089637,6.901048,.8733379,.0254,
GW198,2,6.080377,6.732631,1.718896,7.01622,6.57984,1.684749,.0254,
GW199,1,6.080377,6.923041,1.718896,6.080377,6.732631,1.718896,.0254,
GW200,1,5.496994,6.623247,2.140228,6.077483,6.551481,2.140228,.0254,
GW201,1,6.080377,6.732631,1.718896,6.077483,6.551481,2.140228,.0254,
GW202,2,6.102369,6.539328,2.685992,7.009854,6.364544,2.685992,.0254,
GW203,2,5.172314,4.947758,.0405127,6.093109,5.047882,5.903278E-02,.0254,
GW204,2,6.093897,6.881949,5.903278E-02,6.096003,5.965205,.05903278,.0254
GW205,2,6.089637,5.029362,1.722368,7.000594,5.147427,1.684749,.0254,
GW206,2,6.093109,5.047882,5.903278E-02,6.093109,5.038622,.8768104,.0254,
GW207,2,6.102369,5.241185,1.716002,7.009854,5.362723,1.681277,.0254,
GW208,1,6.089637,5.029362,1.722368,6.102369,5.241185,1.716002,.0254,
GW209,1,5.4941,5.310057,2.140228,6.083849,5.362723,2.140228,.0254,
GW210,1,6.102369,5.241185,1.716002,6.083849,5.362723,2.140228,.0254,
```

FILE: H65 DATA A1

```
GW211,2,6.093109,5.393976,2.685992,7.009854,5.553133,2.685992,.0254,
GW212,1,6.102369,6.539328,2.685992,6.096003,5.965205,2.685992,.0254,
GW213,1,12.04558,6.174135,.4618447,12.04558,5.784055,.4618447,.0254,
GW214,1,11.76527,5.784055,.6331555,12.04558,5.784055,.4618447,.0254,
GW215,1,12.48543,5.784055,.4618447,12.04558,5.784055,.4618447,.0254,
GW216,1,7.009854,5.553133,2.685992,7.394146,5.48484,2.140228,.0254,
GW217,1,7.009854,5.553133,2.685992,7.000594,5.443749,2.140228,.0254,
GW218,1,6.093109,5.393976,2.685992,6.083849,5.382723,2.140228,.0254,
GW219,1,7.009854,6.364544,2.685992,7.384307,6.383064,2.140228,.0254,
GW220,1,7.009854,6.364544,2.685992,7.000594,6.439203,2.140228,.0254,
GW221,1,6.102369,6.539328,2.685992,6.077483,6.551481,2.140228,.0254,
GW222,2,3.728325,6.676162,1.590991,3.728325,6.080377,1.590991,.0254,
GW223,2,4.782813,6.977433,1.759408,3.728325,6.080377,1.590991,.0254,
GW224,1,3.728325,5.784055,1.590991,3.728325,6.080377,1.590991,.0254,
GW225,2,3.728325,5.784055,1.590991,4.782813,5.784055,1.759408,.0254,
GW226,2,3.731219,6.795137,1.562632E-02,3.728325,6.838543,.8831767,.0254,
GW227,2,2.826628,6.670126,.8704442,3.728325,6.838543,.8831767,.0254,
GW228,2,5.135274,7.028953,.8675504,5.144534,6.98844,.0405127,.0254,
GW229,3,5.135274,7.028953,.8675504,3.728325,6.838543,.8831767,.0254,
GW230,2,6.080377,6.923041,1.718896,6.089637,6.901048,.8733379,.0254,
GW231,2,5.135274,7.028953,.8675504,6.089637,6.901048,.8733379,.0254,
GW232,2,7.009854,6.77951,.8704442,7.009854,6.77951,1.681277,.0254,
GW233,2,7.009854,6.77951,.8704442,6.089637,6.901048,.8733379,.0254,
GW234,2,7.787118,6.657393,1.644237,7.790012,6.657393,.8733379,.0254,
GW235,2,7.009854,6.77951,.8704442,7.790012,6.657393,.8733379,.0254,
GW236,1,8.570171,6.532961,.2934277,8.573065,6.532961,.8640779,.0254,
GW237,1,8.573065,6.532961,.8640779,8.110642,6.606463,.8692867,.0254,
GW238,1,9.353224,6.411423,.8704442,9.356117,6.411423,1.534852,.0254,
GW239,2,9.353224,6.411423,.8704442,8.573065,6.532961,.8640779,.0254,
GW240,1,10.0865,6.295673,1.47582,10.0865,6.295673,.8640779,.0254,
GW241,1,9.353224,6.411423,.8704442,10.0865,6.295673,.8640779,.0254,
GW242,2,10.87245,6.174135,1.016869,10.0865,6.295673,.8640779,.0254,
GW243,1,10.0894,5.550239,1.47582,10.0865,5.946106,1.47582,.0254,
GW244,1,9.349752,5.933952,1.590991,10.0865,5.946106,1.47582,.0254,
GW245,2,10.09229,5.550239,.5336101,10.87245,5.653257,.6707745,.0254,
GW246,1,10.87245,6.174135,1.413314,10.87245,5.927586,1.413314,.0254,
GW247,2,10.87245,5.927586,1.413314,10.0865,5.946106,1.47582,.0254,
GW248,1,2.826628,6.670126,0.,2.826628,5.936846,0.,.0254,
GW249,2,3.731219,6.795137,1.562632E-02,3.724853,5.933952,.01562632,.0254
GW250,2,2.826628,5.936846,0.,3.724853,5.933952,1.562632E-02,.0254,
GW251,2,5.172314,4.947758,.0405127,5.16016,5.952472,.0405127,.0254,
GW252,3,3.724853,5.933952,1.562632E-02,5.16016,5.952472,.0405127,.0254,
GW253,2,6.093109,5.047882,5.903278E-02,6.096003,5.965205,.05903278,.0254
GW254,2,5.16016,5.952472,.0405127,6.096003,5.965205,5.903278E-02,.0254,
GW255,2,3.718487,5.128907,1.562632E-02,3.724853,5.209932,.8831767,.0254,
GW256,2,2.826628,5.275332,.8704442,3.724853,5.209932,.8831767,.0254,
GW257,2,5.1509,4.926343,.8733379,5.172314,4.947758,.0405127,.0254,
GW258,3,5.1509,4.926343,.8733379,3.724853,5.209932,.8831767,.0254,
GW259,2,7.009854,6.77951,7.813162E-02,7.009854,5.927586,.07813162,.0254
GW260,2,7.009854,5.927586,7.813162E-02,6.096003,5.965205,.05903278,.0254
GW261,1,7.790012,6.657393,.1840434,7.787118,5.940319,.1869372,.0254,
GW262,2,7.009854,5.927586,7.813162E-02,7.787118,5.940319,.1869372,.0254,
GW263,1,8.570171,6.532961,.2934277,8.576537,5.955945,.2934277,.0254,
GW264,2,8.576537,5.955945,.2934277,7.787118,5.940319,.1869372,.0254,
GW265,2,6.089637,5.029362,1.722368,6.093109,5.038622,.8768104,.0254,
GW266,2,5.1509,4.926343,.8733379,6.093109,5.038622,.8768104,.0254,
GW267,2,7.00696,5.147427,.8640779,7.000594,5.147427,1.684749,.0254,
GW268,2,7.00696,5.147427,.8640779,6.093109,5.038622,.8768104,.0254,
GW269,2,7.787118,5.250445,.8768104,7.790012,5.250445,1.644237,.0254,
GW270,2,7.00696,5.147427,.8640779,7.787118,5.250445,.8768104,.0254,
GW271,1,8.573065,5.353463,1.588098,8.579432,5.353463,.8704442,.0254,
GW272,2,7.787118,5.250445,.8768104,8.579432,5.353463,.8704442,.0254,
GW273,1,9.349752,6.411423,.4022332,9.349752,5.936846,.4022332,.0254,
GW274,2,9.349752,5.936846,.4022332,8.576537,5.955945,.2934277,.0254,
GW275,1,10.09229,5.550239,.5336101,10.0894,5.940319,.5336101,.0254,
GW276,2,9.349752,5.936846,.4022332,10.0894,5.940319,.5336101,.0254,
GW277,1,9.349752,5.453588,.8675504,9.349752,5.453588,1.534852,.0254,
GW278,2,9.349752,5.453588,.8675504,8.579432,5.353463,.8704442,.0254,
GW279,1,10.0894,5.550239,1.47582,10.09229,5.550239,.8704442,.0254,
GW280,1,9.349752,5.453588,.8675504,10.09229,5.550239,.8704442,.0254,
GW281,2,10.87245,5.653257,1.016869,10.09229,5.550239,.8704442,.0254,
GW282,1,11.44021,5.784055,1.413314,11.44021,6.174135,1.413314,.0254,
```

FILE: H65 DATA A1

```
GW283,1,10.87245,6.174135,.6707745,10.87245,5.940319,.6707745,.0254,
GW284,2,10.87245,5.940319,.6707745,10.0894,5.940319,.5336101,.0254,
GW285,1,6.093109,5.393976,2.685992,6.096003,5.965205,2.685992,.0254,
GW286,1,7.009854,6.364544,2.685992,7.009854,5.958839,2.685992,.0254,
GW287,2,7.009854,5.958839,2.685992,6.096003,5.965205,2.685992,.0254,
GW288,1,5.425229,6.670126,2.685992,5.425229,5.977359,2.685992,.0254,
GW289,1,6.096003,5.965205,2.685992,5.968099,5.968099,2.685992,.0254,
GW290,1,5.425229,5.977359,2.685992,5.968099,5.968099,2.685992,.0254,
GW291,1,5.968099,5.968099,2.685992,5.968099,5.963099,2.885661,.0254,
GW292,12,5.968099,5.968099,2.885661,5.968099,11.9362,2.885661,.0254,
GW293,12,5.968099,5.968099,2.885661,5.968099,0.,2.885661,.0254,
GW294,12,5.968099,5.968099,2.885661,0.,5.968099,2.885661,.0254,
GW295,12,5.963099,5.963099,2.885661,11.9362,5.968099,2.885661,.0254,
GW296,1,7.790012,6.657393,.8733579,8.110642,6.606463,.8692867,.0254,
GW297,1,7.787118,6.657393,1.644237,8.112378,6.605884,1.622244,.0254,
GW298,2,8.110642,6.606463,.8692867,8.112378,6.605884,1.622244,.0254,
GW299,1,8.570171,6.532961,.2934277,8.10659,6.607042,.2286073,.0254,
GW300,1,8.110642,6.606463,.8692867,8.10659,6.607042,.2286073,.0254,
GW310,1,12.55083,5.933952,3.209763,12.74414,5.933952,3.506663,.0254,
GW320,2,13.47105,5.933952,2.162221,12.68163,5.933952,2.162221,.0254,
GW321,2,12.48543,6.174135,.4618447,12.58209,6.056069,1.298142,.0254,
GW322,2,12.68163,5.933952,2.162221,12.58209,6.056069,1.298142,.0254,
GW324,1,12.48543,6.174135,.4618447,12.48543,5.784055,.4618447,.0254,
GW326,1,12.21863,5.933952,2.70046,12.55083,5.933952,3.209763,.0254,
GW327,1,13.69271,5.784055,3.609681,13.63773,5.821674,3.249118,.0254,
**********GM 0,0,0,0,180   (MOVE UP @ GND) (ROTATE ABOUT Z AXIS)
**********GE    (GE1 FOR GROUND *** AND ADD GN AND GM CARDS)
**********FR 0,0,0,0,18.1,0
WG
**********SPACE=12" LONGWIRE ANTENNA**********
NX
CM HH-65A DATA
CM CREATED 8/16/87
CM SPACE=12" LONGWIRE ANTENNA
CE
GF
GW401,2,8.110642,6.606463,.8692867,8.18125,6.895364,1.617614,.0254,
GW402,5.11.94025,5.484158,1.413314,12.74414,5.634055,3.206869,.0254,
GW403,1,12.74414,6.233849,3.206869,12.74414,5.634055,3.206869,.0254,
GW404,8,8.187615,5.002636,1.615299,11.94025,5.484158,1.413314,.0254,
GW405,8,11.94025,6.474032,1.413314,8.18125,6.895364,1.617614,.0254,
GW406,5,11.94025,6.474032,1.413314,12.74414,6.233349,3.206869,.0254,
GM 0,0,0,0,180                    (ROTATE ABOUT Z AXIS TO HEAD IN PHI=0)
GE
EX 0,402,3,01, 1,0                 (1 VOLT EXCITATION, ANT = TAG 402)
PL3, 2, 0,4
RP0, 1, 361, 1000, 90, 0, 0, 1     STD. HORIZONTAL PATTERN CUT
PL3, 2, 0, 4
RP0, 1, 361, 1000, 26, 0, 0, 1     HORIZONTAL CUT, ELEVATION = 64 DEG
PL3, 1, 0,4
RP0, 361, 1, 1000, 0, 0, 1, 0      STD. VERTICAL PATTERN CUT
PL3, 1, 0,4
RP0, 361, 1, 1000, 0,45, 1, 0      VERT CUT AT PHI = 45 DEG
XQ
**********COLLINS 437R-Z ANTENNA**********
NX
CM H65 IGUANA DATA
CM COLLINS 437R-2 ANTENNA
CM STANDARD RADIATION PATTERNS
CE
GF
GW401,3,8.110642,6.606463,.8692867,8.110642,7.063678,.8692867,.0254  ANT
GW402,15,8.110642,7.063678,.8692867,11.99986,5.99993,.1996697,.0254  ANT
GM 0,0,0,0,180                    (ROTATE ABOUT Z AXIS TO HEAD IN PHI=0)
GE
EX 0,401,2,01, 1,0                 (1 VOLT EXCITATION, ANT = TAG 401)
PL3, 2, 0,4
RP0, 1, 361, 1000, 90, 0, 0, 1     STD. HORIZONTAL PATTERN CUT
PL3, 2, 0, 4
RP0, 1, 361, 1000, 26, 0, 0, 1     HORIZONTAL CUT, ELEVATION = 64 DEG
PL3, 1, 0,4
RP0, 361, 1, 1000, 0, 0, 1, 0      STD. VERTICAL PATTERN CUT
```

```
FILE: H65       DATA      A1

PL3, 1, 0,4
RP0, 361, 1, 1000, 0,45, 1, 0      VERT CUT AT PHI = 45 DEG
XQ
**************************STANDARD TUBE INSTALLATION**********
NX
CM H65 IGUANA DATA CREATED 7/29/87
CM STANDARD TUBE ANTENNA
CE
GF
GW401,1,8.110642,6.606463,.8692867,8.110642,6.860536..8692867,.0254    ANT
GW402,1,11.44021,6.174135,1.413314,11.44021,6.428207,1.413314,.0254    ANT
GW403,14,11.44021,6.428207,1.413314,8.110642,6.860536,.8692867,.0254   ANT
GM 0,0,0,0,180                     (ROTATE ABOUT Z AXIS TO HEAD IN PHI=0)
GE
EX 0,403,13,01, 1,0                (1 VOLT EXCITATION, ANT = TAG 403)
PL3, 2, 0,4
RP0, 1, 361, 1000, 90, 0, 0, 1     STD. HORIZONTAL PATTERN CUT
PL3, 2, 0, 4
RP0, 1, 361, 1000, 26, 0, 0, 1     HORIZONTAL CUT, ELEVATION = 64 DEG
PL3, 1, 0,4
RP0, 361, 1, 1000, 0, 0, 1, 0      STD. VERTICAL PATTERN CUT
PL3, 1, 0,4
RP0, 361, 1, 1000, 0,45, 1, 0      VERT CUT AT PHI = 45 DEG
XQ
**********************TRIVEC LONG TUBE INSTALLATION***********
NX
CM CREATED 7/30/87
CM LONG TRIVEC TUBE ANTENNA MODEL
CM EXCITATION ON SHORT STUB
CE
GF
GW401,3,8.110642,6.360536,.8692867,8.110642,7.160329,.8692867,.0254   ANT
GW402,14,8.110642,7.160329,.8692867,11.44021,6.728001,1.413314,.9254   ANT
GW403,2,8.110642,6.606463,.8692867,8.110642,6.860536,.8692867,.0254   ANT
GW404,6,11.44021,6.428207,1.413314,10.08419,6.604148,1.191652,.0254   ANT
GW405,2,12.44434,5.933952,2.706827,12.44434,6.188025,2.706827,.0254   ANT
GW406,4,11.44021,6.428207,1.413314,11.91073,6.315351,2.019847,.0254   ANT
GW407,4,12.44434,6.188025,2.706827,11.91073,6.315351,2.019847,.0254   ANT
GW408,2,11.91073,6.315351,2.019847,11.91073,6.061278,2.019847,.0254   ANT
GW409,1,11.8679,5.933952,2.162221,11.91073,6.061278,2.019847,.0254    ANT
GW410,2,12.74414,5.933952,3.506663,12.55083,5.933952,3.209763,.0254   ANT
GW411,2,12.44434,5.933952,2.706827,12.21863,5.933952,2.70046,.0254    ANT
GW412,6,8.110642,6.860536,.8692867,9.348015,6.699642,1.071271,.0254   ANT
GW413,2,9.353224,6.411423,.8704442,9.348015,6.699642,1.071271,.0254   ANT
GW414,4,9.348015,6.699642,1.071271,10.08419,6.604148,1.191652,.0254   ANT
GW415,2,10.0865,6.295673,.8640779,10.08419,6.604148,1.191652,.0254    ANT
GW416,2,12.44434,6.188025,2.706827,12.44434,6.487819,2.706827,.0254   ANT
GW417,6,11.44021,6.728001,1.413314,12.44434,6.487819,2.706827,.0254   ANT
GW418,1,11.44021,6.174135,1.413314,11.44021,6.428207,1.413314,.0254,
GM 0,0,0,0,180                     (ROTATE ABOUT Z AXIS TO HEAD IN PHI=0)
GE
EX 0,401,2,01, 1,0                 (1 VOLT EXCITATION, ANT = TAG 401)
PL3, 2, 0,4
RP0, 1, 361, 1000, 90, 0, 0, 1     STD. HORIZONTAL PATTERN CUT
PL3, 2, 0, 4
RP0, 1, 361, 1000, 26, 0, 0, 1     HORIZONTAL CUT, ELEVATION = 64 DEG
PL3, 1, 0,4
RP0, 361, 1, 1000, 0, 0, 1, 0      STD. VERTICAL PATTERN CUT
PL3, 1, 0,4
RP0, 361, 1, 1000, 0,45, 1, 0      VERT CUT AT PHI = 45 DEG
XQ
EN
```

FILE: H60 DATA A1

```
CM H60 IGUANA DATA CREATED 7/31/87
CM GREEN'S FUNCTION FOR HELICOPTER
CM FINAL GW CARDS
**********CM FREE SPACE
**********CM FREQ = 26.836MHZ
CE
GW1,3,4.26702,9.397726,.150275,5.867054,9.397726,.150275,.0254,
GW2,3,5.867054,9.397726,.150275,7.187892,9.397726,.150275,.0254,
GW3,2,7.187892,9.397726,.150275,8.382183,9.397726,.150275,.0254,
GW4,1,8.978538,9.397726,.150275,9.575684,9.397726,.150275,.0254,
GW5,2,4.26702,9.397726,.150275,4.26702,8.229535,.150275,.0254,
GW6,2,5.867054,9.397726,.150275,5.867054,8.229535,.150275,.0254,
GW7,2,7.187892,9.397726,.150275,7.187892,8.229535,.150275,.0254,
GW8,2,8.382183,9.397726,.150275,8.382183,8.229535,.150275,.0254,
GW9,2,9.575684,9.397726,.150275,9.575684,8.229535,.150275,.0254,
GW10,2,10.73122,8.229535,.150275,10.73122,9.042603,.150275,.0254,
GW11,2,11.88755,8.686688,.150275,11.88755,8.229535,.150275,.0254,
GW12,1,12.53452,8.229535,.2135487,12.53452,8.648724,.2135487,.0254,
GW13,1,13.18228,8.61076,.2776133,13.18228,8.229535,.2776133,.0254,
GW14,1,13.94473,8.229535,.3155776,13.94473,8.58545,.3155776,.0254,
GW15,1,14.70639,8.560141,.3535418,14.70639,8.229535,.3535418,.0254,
GW16,1,5.409901,9.397726,1.978885,5.867054,9.397726,1.978885,.0254,
GW17,1,5.867054,9.397726,1.978885,6.298897,9.397726,1.978885,.0254,
GW18,2,6.298897,9.397726,1.978885,7.187892,9.397726,1.978885,.0254,
GW19,2,7.187892,9.397726,1.978885,8.229535,9.397726,1.978885,.0254,
GW20,1,8.229535,9.397726,1.978885,8.978538,9.397726,1.978885,.0254,
GW21,4,5.409901,9.093222,1.978885,7.187892,9.093222,2.385418,.0254,
GW22,2,7.187892,9.093222,2.385418,8.229535,9.093222,2.385418,.0254,
GW23,1,8.229535,9.397726,2.385418,8.978538,9.397726,2.385418,.0254,
GW24,1,8.978538,9.397726,2.385418,9.575684,9.397726,2.385418,.0254,
GW25,2,5.409901,9.093222,1.978885,5.409901,8.229535,1.978885,.0254,
GW26,1,5.409901,9.397726,1.978885,5.409901,9.093222,1.978885,.0254,
GW27,2,6.298897,8.229535,2.182152,6.298897,9.093222,2.182152,.0254,
GW28,1,6.298897,9.397726,1.978885,6.298897,9.093222,2.182152,.0254,
GW29,2,7.187892,9.093222,2.385418,7.187892,8.229535,2.385418,.0254,
GW30,1,7.187892,9.397726,1.978885,7.187892,9.093222,2.385418,.0254,
GW31,2,8.229535,9.093222,2.385418,8.229535,8.229535,2.385418,.0254,
GW32,1,8.229535,9.093222,2.385418,8.229535,9.397726,2.385418,.0254,
GW33,2,9.575684,9.397726,2.385418,9.575684,8.229535,2.385418,.0254,
GW34,1,10.73122,8.229535,2.182152,10.73122,8.814026,2.182152,.0254,
GW35,1,8.229535,9.397726,1.978885,8.229535,9.397726,2.385418,.0254,
GW36,1,8.978538,9.397726,1.978885,8.978538,9.397726,2.385418,.0254,
GW37,1,13.94473,8.58545,.3155776,13.94473,8.408283,.9665057,.0254,
GW38,2,4.648244,9.397726,.7600753,5.867054,9.397726,.7600753,.0254,
GW39,3,5.867054,9.397726,1.06458,7.187892,9.397726,1.06458,.0254,
GW40,1,8.978538,9.397726,1.06458,9.575684,9.397726,1.267847,.0254,
GW41,3,14.70639,8.394837,.9380326,16.05254,8.229535,.9119322,.0254,
GW42,2,4.838856,8.229535,1.06458,4.838856,9.397726,1.06458,.0254,
GW43,16,8.229535,8.229535,3.071147,8.229535,16.45907,3.071147,.0254,
GW44,4,16.50574,8.229535,1.267847,16.67736,10.42197,1.267847,.0254,
GW45,2,16.67736,10.42197,1.267847,17.45247,10.42197,1.267847,.0254,
GW46,4,17.45247,10.42197,1.267847,17.62331,8.229535,1.267847,.0254,
GW47,2,16.67736,10.42197,1.267847,17.06808,9.517155,1.267847,.0254,
GW48,3,4.26702,7.061345,.150275,5.867054,7.061345,.150275,.0254,
GW49,3,5.867054,7.061345,.150275,7.187892,7.061345,.150275,.0254,
GW50,2,7.187892,7.061345,.150275,8.382183,7.061345,.150275,.0254,
GW51,1,8.382183,7.061345,.150275,8.978538,7.061345,.150275,.0254,
GW52,1,8.978538,7.061345,.150275,9.575684,7.061345,.150275,.0254,
GW53,2,4.26702,8.229535,.150275,4.26702,7.061345,.150275,.0254,
GW54,2,5.867054,8.229535,.150275,5.867054,7.061345,.150275,.0254,
GW55,2,7.187892,8.229535,.150275,7.187892,7.061345,.150275,.0254,
GW56,2,8.382183,8.229535,.150275,8.382183,7.061345,.150275,.0254,
GW57,2,9.575684,8.229535,.150275,9.575684,7.061345,.150275,.0254,
GW58,2,10.73122,8.229535,.150275,10.73122,7.416468,.150275,.0254,
GW59,2,11.88755,8.229535,.150275,11.88755,7.772383,.150275,.0254,
GW60,1,12.53452,8.229535,.2135487,12.53452,7.810347,.2135487,.0254,
GW61,1,13.18228,8.229535,.2776133,13.18228,7.848311,.2776133,.0254,
GW62,1,13.94473,8.229535,.3155776,13.94473,7.873621,.3155776,.0254,
GW63,1,14.70639,8.229535,.3535418,14.70639,7.899721,.3535418,.0254,
GW64,1,5.409901,7.061345,1.978885,5.867054,7.061345,1.978885,.0254,
GW65,1,5.867054,7.061345,1.978885,6.298897,7.061345,1.978885,.0254,
GW66,2,6.298897,7.061345,1.978885,7.187892,7.061345,1.978885,.0254,
```

FILE: H60 DATA A1

```
GW67,2,7.187892,7.061345,1.978885,8.229535,7.061345,1.978885,.0254,
GW68,1,8.229535,7.061345,1.978885,8.978538,7.061345,1.978885,.0254,
GW69,4,5.409901,7.36585,1.978885,7.187892,7.36585,2.385418,.0254,
GW70,2,7.187892,7.36585,2.385418,8.229535,7.36585,2.385418,.0254,
GW71,1,8.229535,7.061345,2.385418,8.978538,7.061345,2.385418,.0254,
GW72,1,8.978538,7.061345,2.385418,9.575684,7.061345,2.385418,.0254,
GW73,2,5.409901,8.229535,1.978885,5.409901,7.36585,1.978885,.0254,
GW74,1,5.409901,7.061345,1.978885,5.409901,7.36585,1.978885,.0254,
GW75,2,6.298897,8.229535,2.182152,6.298897,7.36585,2.182152,.0254,
GW76,1,6.298897,7.061345,1.978885,6.298897,7.36585,2.182152,.0254,
GW77,2,7.187892,8.229535,2.385418,7.187892,7.36585,2.385418,.0254,
GW78,1,7.187892,7.061345,1.978885,7.187892,7.36585,2.385418,.0254,
GW79,2,8.229535,8.229535,2.385418,8.229535,7.36585,2.385418,.0254,
GW80,1,8.229535,7.36585,2.385418,8.229535,7.061345,2.385418,.0254,
GW81,2,9.575684,8.229535,2.385418,9.575684,7.061345,2.385418,.0254,
GW82,1,10.73122,8.229535,2.182152,10.73122,7.645044,2.182152,.0254,
GW83,1,8.229535,7.061345,1.978885,8.229535,7.061345,2.385418,.0254,
GW84,1,8.978538,7.061345,1.978885,8.978538,7.061345,2.385418,.0254,
GW85,2,4.648244,7.061345,.7600753,5.867054,7.061345,.7600753,.0254,
GW86,3,5.867054,7.061345,1.06458,7.187892,7.061345,1.06458,.0254,
GW87,1,8.978538,7.061345,1.06458,9.575684,7.061345,1.267847,.0254,
GW88,3,16.05254,8.229535,.9119322,14.70639,8.064233,.9380326,.0254,
GW89,2,4.838856,8.229535,1.06458,4.838856,7.061345,1.06458,.0254,
GW90,16,8.229535,8.229535,3.071147,8.229535,0.,3.071147,.0254,
GW91,4,16.50574,8.229535,1.267847,16.67736,6.037892,1.267847,.0254,
GW92,2,16.67736,6.037892,1.267847,17.45247,6.037892,1.267847,.0254,
GW93,4,17.62331,8.229535,1.267847,17.45247,6.037892,1.267847,.0254,
GW94,3,4.26702,8.229535,.150275,5.867054,8.229535,.150275,.0254,
GW95,3,5.867054,8.229535,.150275,7.187892,8.229535,.150275,.0254,
GW96,4,5.409901,8.229535,1.978885,7.187892,8.229535,2.385418,.0254,
GW97,2,7.187892,8.229535,2.385418,8.229535,8.229535,2.385418,.0254,
GW98,3,8.229535,8.229535,2.385418,9.575684,8.229535,2.385418,.0254,
GW99,1,16.05254,8.229535,.9119322,16.05254,8.229535,1.217228,.0254,
GW100,1,16.05254,8.229535,.9119322,16.05254,8.229535,.632737,.0254,
GW101,3,16.05254,8.229535,.9119322,17.39869,8.229535,.9119322,.0254,
GW102,2,16.05254,8.229535,1.217228,16.73747,8.229535,1.941712,.0254,
GW103,4,16.73747,8.229535,1.941712,18.26237,8.229535,3.553609,.0254,
GW104,1,17.39869,8.229535,.9119322,17.60195,8.229535,1.267847,.0254,
GW105,2,17.60195,8.229535,1.267847,18.05436,8.229535,1.949621,.0254,
GW106,3,18.05436,8.229535,1.949621,18.92279,8.229535,3.325033,.0254,
GW107,1,18.26237,8.229535,3.553609,18.92279,8.229535,3.325033,.0254,
GW108,3,16.73747,8.229535,1.941712,18.05436,8.229535,1.949621,.0254,
GW109,3,16.73747,8.229535,1.941712,18.1469,8.229535,2.833871,.0254,
GW110,1,16.50574,8.229535,1.267847,16.05254,8.229535,1.217228,.0254,
GW111,2,16.50574,8.229535,1.267847,17.62331,8.229535,1.267847,.0254,
GW112,1,8.229535,8.229535,2.385418,8.229535,8.229535,3.071147,.0254,
GW113,16,8.229535,8.229535,3.071147,0.,8.229535,3.071147,.0254,
GW114,16,8.229535,8.229535,3.071147,16.45907,8.229535,3.071147,.0254,
GW115,2,11.88755,8.686688,.150275,11.68032,8.750752,.150275,.0254,
GW117,2,18.92279,8.229535,3.325033,18.1469,8.229535,2.833871,.0254,
GW118,1,18.26237,8.229535,3.553609,18.1469,8.229535,2.833871,.0254,
GW119,2,18.05436,8.229535,1.949621,18.1469,8.229535,2.833871,.0254,
GW120,2,13.94473,8.229535,1.623761,14.70639,8.229535,1.521732,.0254,
GW121,2,13.18228,8.229535,1.724999,13.94473,8.229535,1.623761,.0254,
GW122,1,12.53452,8.229535,1.852337,13.18228,8.229535,1.724999,.0254,
GW123,1,11.88755,8.229535,1.978885,12.53452,8.229535,1.852337,.0254,
GW124,3,11.88755,8.686688,.150275,12.53452,8.648724,.2135487,.0254,
GW125,1,13.18228,8.61076,.2776133,12.53452,8.648724,.2135487,.0254,
GW126,2,13.18228,8.61076,.2776133,13.94473,8.58545,.3155776,.0254,
GW127,2,14.70639,8.560141,.3535418,13.94473,8.58545,.3155776,.0254,
GW128,2,14.70639,7.899721,.3535418,13.94473,7.873621,.3155776,.0254,
GW129,2,13.18228,7.848311,.2776133,13.94473,7.873621,.3155776,.0254,
GW130,1,13.18228,7.848311,.2776133,12.53452,7.810347,.2135487,.0254,
GW131,1,11.88755,7.772383,.150275,12.53452,7.810347,.2135487,.0254,
GW132,1,14.70639,8.064233,.9380326,13.95818,8.051578,.9688785,.0254,
GW133,2,13.18228,8.038923,1.001306,13.95818,8.051578,.9688785,.0254,
GW134,1,13.18228,8.038923,1.001306,12.54559,8.019941,1.032152,.0254,
GW135,1,11.88755,8.000959,1.06458,12.54559,8.019941,1.032152,.0254,
GW136,2,14.70639,8.394837,.9380326,13.94473,8.408283,.9665057,.0254,
GW137,2,13.18228,8.420147,1.001306,13.94473,8.408283,.9665057,.0254,
GW138,1,13.18228,8.420147,1.001306,12.52345,8.43913,1.033734,.0254,
GW139,4,11.88755,8.458112,1.06458,12.52345,8.43913,1.033734,.0254,
```

FILE: H60 DATA A1

```
GW140,3,14.70639,8.560141,.3535418,16.05254,8.229535,.632737,.0254,
GW141,3,17.39869,8.229535,.9119322,16.05254,8.229535,.632737,.0254,
GW142,3,17.39869,8.229535,.9119322,16.05254,8.229535,1.217228,.0254,
GW143,3,14.70639,8.229535,1.521732,16.05254,8.229535,1.217228,.0254,
GW144,3,17.62331,8.229535,1.267847,17.06254,6.929261,1.267847,.0254,
GW145,1,16.50574,8.229535,1.267847,17.00876,8.229535,1.489305,.0254,
GW146,2,18.05436,8.229535,1.949621,17.00876,8.229535,1.489305,.0254,
GW147,1,17.39869,8.229535,.9119322,17.00876,8.229535,1.489305,.0254,
GW148,1,16.73747,8.229535,1.941712,17.00876,8.229535,1.489305,.0254,
GW149,3,17.62331,8.229535,1.267847,17.06808,9.517155,1.267847,.0254,
GW150,2,17.45247,10.42197,1.267847,17.06808,9.517155,1.267847,.0254,
GW151,3,16.50574,8.229535,1.267847,17.06808,9.517155,1.267847,.0254,
GW152,3,16.50574,8.229535,1.267847,17.06254,6.929261,1.267847,.0254,
GW153,2,17.45247,6.037892,1.267847,17.06254,6.929261,1.267847,.0254,
GW154,2,16.67736,6.037892,1.267847,17.06254,6.929261,1.267847,.0254,
GW155,2,10.73122,8.814026,2.182152,10.73122,8.929501,1.1587,.0254,
GW156,6,11.88755,8.458112,1.06458,10.73122,8.929501,1.1587,.0254,
GW157,3,9.575684,9.397726,1.267847,10.73122,8.929501,1.1587,.0254,
GW158,2,10.73122,7.645044,2.182152,10.73122,7.531943,1.175309,.0254,
GW159,3,11.88755,8.000959,1.06458,10.73122,7.531943,1.175309,.0254,
GW160,2,10.73122,7.416468,.150275,10.73122,7.531943,1.175309,.0254,
GW161,3,9.575684,7.061345,1.267847,10.73122,7.531943,1.175309,.0254,
GW162,2,7.187892,9.397726,1.978885,7.187892,9.397726,1.06458,.0254,
GW163,2,5.867054,9.397726,1.978885,5.867054,9.397726,1.06458,.0254,
GW164,2,7.187892,7.061345,1.978885,7.187892,7.061345,1.06458,.0254,
GW165,2,5.867054,7.061345,1.978885,5.867054,7.061345,1.06458,.0254,
GW166,2,7.187892,7.061345,.150275,7.187892,7.061345,1.06458,.0254,
GW167,1,5.867054,9.397726,.7600753,5.867054,9.397726,1.06458,.0254,
GW168,1,5.867054,7.061345,.7600753,5.867054,7.061345,1.06458,.0254,
GW169,1,5.867054,7.061345,.150275,5.867054,7.061345,.7600753,.0254,
GW170,2,7.187892,9.397726,.150275,7.187892,9.397726,1.06458,.0254,
GW171,1,5.867054,9.397726,.150275,5.867054,9.397726,.7600753,.0254,
GW172,2,5.409901,7.061345,1.978885,4.838856,7.061345,1.06458,.0254,
GW173,1,4.648244,7.061345,.7600753,4.838856,7.061345,1.06458,.0254,
GW174,1,4.26702,7.061345,.150275,4.648244,7.061345,.7600753,.0254,
GW175,2,5.409901,9.397726,1.978885,4.838856,9.397726,1.06458,.0254,
GW176,1,4.648244,9.397726,.7600753,4.838856,9.397726,1.06458,.0254,
GW177,1,4.26702,9.397726,.150275,4.648244,9.397726,.7600753,.0254,
GW178,1,14.70639,8.229535,1.521732,14.70639,8.064233,.9380326,.0254,
GW179,1,14.70639,7.899721,.3535418,14.70639,8.064233,.9380326,.0254,
GW180,1,13.94473,8.229535,1.623761,13.95818,8.051578,.9688785,.0254,
GW181,1,13.94473,7.873621,.3155776,13.95818,8.051578,.9688785,.0254,
GW182,1,13.18228,8.229535,1.724999,13.18228,8.038923,1.001306,.0254,
GW183,1,13.18228,7.848311,.2776133,13.18228,8.038923,1.001306,.0254,
GW184,2,12.53452,8.229535,1.852337,12.54559,8.019941,1.032152,.0254,
GW185,2,12.53452,7.810347,.2135487,12.54559,8.019941,1.032152,.0254,
GW186,1,13.94473,8.229535,1.623761,13.94473,8.408283,.9665057,.0254,
GW187,1,14.70639,8.229535,1.521732,14.70639,8.394837,.9380326,.0254,
GW188,1,14.70639,8.560141,.3535418,14.70639,8.394837,.9380326,.0254,
GW189,1,13.18228,8.61076,.2776133,13.18228,8.420147,1.001306,.0254,
GW190,1,13.18228,8.229535,1.724999,13.18228,8.420147,1.001306,.0254,
GW191,2,12.53452,8.229535,1.852337,12.52345,8.43913,1.033734,.0254,
GW192,2,12.53452,8.648724,.2135487,12.52345,8.43913,1.033734,.0254,
GW193,3,11.88755,8.5724,.60743,11.88755,8.458112,1.06458,.0254,
GW194,6,11.88755,8.229535,1.978885,11.88755,8.458112,1.06458,.0254,
GW195,2,11.88755,8.229535,1.978885,11.88755,8.000959,1.06458,.0254,
GW196,2,11.88755,7.772383,.150275,11.88755,8.000959,1.06458,.0254,
GW197,4,10.73122,8.229535,.150275,11.88755,8.229535,.150275,.0254,
GW198,2,9.575684,8.229535,.150275,10.73122,8.229535,.150275,.0254,
GW199,2,8.382183,8.229535,.150275,9.575684,8.229535,.150275,.0254,
GW200,2,7.187892,8.229535,.150275,8.382183,8.229535,.150275,.0254,
GW201,2,10.73122,8.98605,.654488,10.73122,8.929501,1.1587,.0254,
GW202,2,8.978538,9.397726,1.978885,8.978538,9.397726,1.06458,.0254,
GW203,2,9.575684,9.397726,2.385418,9.575684,9.397726,1.267847,.0254,
GW204,2,8.978538,9.397726,.150275,8.978538,9.397726,1.06458,.0254,
GW205,1,8.382183,9.397726,.150275,8.978538,9.397726,.150275,.0254,
GW206,2,9.575684,9.397726,.150275,10.73122,9.042603,.150275,.0254,
GW207,2,9.575684,9.397726,.150275,9.575684,9.397726,1.267847,.0254,
GW208,2,9.575684,7.061345,2.385418,9.575684,7.061345,1.267847,.0254,
GW209,2,9.575684,7.061345,.150275,9.575684,7.061345,1.267847,.0254,
GW210,3,9.575684,9.397726,2.385418,10.73122,8.814026,2.182152,.0254,
GW211,3,9.575684,7.061345,2.385418,10.73122,7.645044,2.182152,.0254,
```

```
FILE: H60       DATA      A1

GW212,3,11.88755,8.229535,1.978885,10.73122,7.645044,2.182152,.0254,
GW213,3,11.88755,8.229535,1.978885,10.73122,8.814026,2.182152,.0254,
GW214,2,8.978538,7.061345,1.978885,8.978538,7.061345,1.06458,.0254,
GW215,2,8.978538,7.061345,.150275,8.978538,7.061345,1.06458,.0254,
GW216,2,11.88755,7.772383,.150275,10.73122,7.416468,.150275,.0254,
GW217,2,9.575684,7.061345,.150275,10.73122,7.416468,.150275,.0254,
GW218,2,9.575684,8.229535,2.385418,10.73122,8.229535,2.182152,.0254,
GW219,2,10.73122,9.042603,.150275,11.68032,8.750752,.150275,.0254,
GW220,2,11.88755,8.5724,.60743,11.88755,8.686688,.150275,.0254
GW221,2,10.73122,8.98605,.654488,10.73122,9.042603,.150275,.0254
GW222,3,11.88755,8.5724,.60743,11.3094,8.77923,.630959,.0254
GW223,3,11.3094,8.77923,.630959,10.73122,8.98605,.654488,.0254
**********GM 0.0,0,0,180   (MOVE UP 3 GND) (ROTATE ABOUT Z AXIS)
**********GE    (GE1 FOR GROUND *** AND ADD GN AND GM CARDS)
**********FR 0,0,0,0,26.836,0
WG
**********ORIGINAL LONGWIRE ANTENNA**********
NX
CM ORIGINAL LONGWIRE ANTENNA SPACED 18" FROM A/C
CM STANDARD RADIATION PATTERNS
CE
GF
GW401,1,11.88755,8.458112,1.064580,11.88755,8.908386,1.064580,.0254  ANT
GW402,8,11.88755,8.908386,1.064580,10.73122,9.41774,.8175375,.0254  ANT
GW403,4,10.73122,9.41774,.8175375,10.73122,9.324411,1.651959,.0254  ANT
GW404,8,10.73122,9.324411,1.651959,12.53452,8.62981,1.852062,.0254  ANT
GW405,14,12.53452,8.62981,1.852062,16.05254,8.62981,1.216953,.0254  ANT
GM 0,0,0,0,180                    (ROTATE ABOUT Z AXIS TO HEAD IN PHI=0)
GE
EX 0,402,2,01, 1,0                (1 VOLT EXCITATION, ANT = 402,2)
PL3, 2, 0, 4
RP0, 1, 361, 1000, 90, 0, 0, 1     STD. HORIZONTAL PATTERN CUT
PL3, 2, 0, 4
RP0, 1, 361, 1000, 26, 0, 0, 1     HORIZONTAL CUT, ELEVATION = 64 DEG
PL3, 1, 0, 4
RP0, 361, 1, 1000, 0, 0, 1, 0      STD. VERTICAL PATTERN CUT
PL3, 1, 0, 4
RP0, 361, 1, 1000, 0, 45, 1, 0      VERT CUT AT PHI = 45 DEG
XQ
**********COLLINS 437R-2 ANTENNA**********
NX
CM ESTIMATED ORIGINAL PLACEMENT OF 437R-2 ANT
CM STANDARD RADIATION PATTERNS
CE
GF
GW401,3,11.3094,8.77923,.630959,11.3094,8.901028,0.,.0254            ANT
GW402,8,11.88755,8.529294,1.978885,11.88043,8.901028,0.,.0254        ANT
GW403,16,11.88755,8.529294,1.978885,16.05254,8.529294,1.217228,.0254  ANT
GW404,2,11.3094,8.901028,0.,11.88043,8.901028,0.,.0254               ANT
GM 0,0,0,0,180                    (ROTATE ABOUT Z AXIS TO HEAD IN PHI=0)
GE
EX 0,401,2,01, 1,0                (1 VOLT EXCITATION, ANT = 401,2)
PL3, 2, 0, 4
RP0, 1, 361, 1000, 90, 0, 0, 1     STD. HORIZONTAL PATTERN CUT
PL3, 2, 0, 4
RP0, 1, 361, 1000, 26, 0, 0, 1     HORIZONTAL CUT, ELEVATION = 64 DEG
PL3, 1, 0, 4
RP0, 361, 1, 1000, 0, 0, 1, 0      STD. VERTICAL PATTERN CUT
PL3, 1, 0, 4
RP0, 361, 1, 1000, 0, 45, 1, 0      VERT CUT AT PHI = 45 DEG
XQ
********** PROPOSED CG COLLINS 437R-2 ANT INSTALLATION**********
NX
CM PROPOSED CG LOCATION OF COLLINS 437R-2 ANT
CM STANDARD RADIATION PATTERNS
CE
GF
GW401,3,11.3094,8.77923,.630959,11.31,9.3,.63,.0254
GW402,20,11.31,9.3,.63,16.0,8.5,0.3,.0254
GM 0,0,0,0,180                    (ROTATE ABOUT Z AXIS TO HEAD IN PHI=0)
GE
EX 0,401,2,01, 1,0                (1 VOLT EXCITATION, ANT = 401,2)
```

```
FILE: H60       DATA     A1

PL3, 2, 0, 4
RP0, 1, 361, 1000, 90, 0, 0, 1     STD. HORIZONTAL PATTERN CUT
PL3, 2, 0, 4
RP0, 1, 361, 1000, 26, 0, 0, 1     HORIZONTAL CUT, ELEVATION = 64 DEG
PL3, 1, 0, 4
RP0, 361, 1, 1000, 0, 0, 1, 0      STD. VERTICAL PATTERN CUT
PL3, 1, 0, 4
RP0, 361, 1, 1000, 0, 45, 1, 0      VERT CUT AT PHI = 45 DEG
XQ
**************************ARMY-TYPE TUBE ANTENNA***************
NX
CM TUBE ANTENNA
CM STANDARD RADIATION PATTERNS
CE
GF
GW401,1,11.88755,8.458112,1.064580,11.88755,8.686688,1.064580,.0254  ANT
GW402,1,16.05254,8.229535,.9119322,16.05254,8.458112,.9119322,.0254  ANT
GW403,12,11.88755,8.686688,1.064580,14.70639,8.623414,.9377575,.0254  ANT
GW404,12,14.70639,8.623414,.9377575,16.05254,8.458112,.9119322,.0254  ANT
GM 0,0,0,0,180                     (ROTATE ABOUT Z AXIS TO HEAD IN PHI=0)
GE
EX 0,403,2,01, 1,0                 (1 VOLT EXCITATION, ANT = 403,2)
PL3, 2, 0, 4
RP0, 1, 361, 1000, 90, 0, 0, 1     STD. HORIZONTAL PATTERN CUT
PL3, 2, 0, 4
RP0, 1, 361, 1000, 26, 0, 0, 1     HORIZONTAL CUT, ELEVATION = 64 DEG
PL3, 1, 0, 4
RP0, 361, 1, 1000, 0, 0, 1, 0      STD. VERTICAL PATTERN CUT
PL3, 1, 0, 4
RP0, 361, 1, 1000, 0, 45, 1, 0      VERT CUT AT PHI = 45 DEG
XQ
EN
```

INITIAL DISTRIBUTION LIST

	No. Copies
Commandant (G-PTE) US Coast Guard Washington, DC 20593	2
Commandant (G-EAE-4) US Coast Guard Washington, DC 20593	1
Ed Bregstone Commandant (G-EEE-4/TRPT63) US Coast Guard Washington, DC 20593	1
Paul Arnstein Commandant (G-EEE-4/TP63) US Coast Guard Washington, DC 20593	1
LCDR B. Black US Coast Guard Aircraft Repair & Supply Center Elizabeth City, NC 27909	1
Dr. R.W. Adler Code 62AB Naval Postgraduate School Monterey, CA 92940	5
Dr. Robert HC Au Lockheed Missile & Space Co. PO Box 504 Sunnyvale, CA 94088	1
Capt. W.P. Averill US Naval Academy Dept. of Electrical Engineering Annapolis, MD 21402	1
Dr. Waite Arizona State University College of Engineering Electrical Engineering Dept. Tempe AZ 85287	1

Constantine Balanis 1
Arizona State University
College of Engineering
Electrical Engineering Dept.
Tempe AZ 85287

Dan Baran 1
IITRI
185 Admiral Cochrane Dr.
Annapolis, MD 21401

J.E. Barkhouser 1
Boeing Aerospace Co.
PO Box 3999, MS 4H-09
Seattle, WA 98124

J.K. Breakall 1
Lawrence Livermore National Laboratories
PO Box 5504, L-156
Livermore, CA 94550

G. Burke 1
Lawrence Livermore National Laboratories
PO Box 5504, L-156
Livermore, CA 94550

Donn Campbell 1
TRW MIL ELEX Division
RC2/266 7X
San Diego, CA 92128

Brenton Campbell 1
IITRI
185 Admiral Cochrane Dr.
Annapolis, MD 21401

William F. Croswell 1
NASA Langley Research Center
Mail Stop 490
Hampton, VA 23665

James J. Daniel 1
Naval Avionic Center
6000 E. 21 ST / D/832
Indianapolis, IN 46219

Dennis DeCarlo 1
Naval Air Test Center
SY80AE
Patuxent River, MD 20670

Peter Butt 1
Naval Air Test Center
SY80AE
Patuxent River, MD 20670

Professor John Donnellan 1
US Coast Guard Academy
Mathematics Dept.
New London, CT 06320

Francis Enomoto 1
NASA Ames Research Center
MS 227-2
Moffett Field, CA 94035

Dr. A.J. Ferraro 1
Pennsylvania State University
Ionosphere Research Laboratory
University Park, PA 16802

R.D. Gehring 137-124 1
Collins Rockwell
350 Collins Road NE
Cedar Rapids, IA 52498

Fred Hubler 1
Collins Telecommunications
885 35th St. NE
Cedar Rapids, IA 52498

Rob Timm 1
Collins Telecommunications
885 35th St. NE
Cedar Rapids, IA 52498

Frank Cancellor 1
NOE COMM Branch
DAVAA-E, AVRADA
Ft. Monmouth, J.J. 07703

Dr. Anthony Jennetti 1
E S L Inc.
Box 510
Sunnyvale, CA 94086

H. Kobayashi 1
Department of Commerce
179 Admiral Cochrane Dr.
Annapolis, Md 21401

Dr. S.J. Kubina 1
7141 Sherbrooke St. West
Montreal, Quebec, Canada H4B1R6

T.C. Larter 1
Lockheed, Dept. 7776
Bldg. 90-1
PO Box 551
Burbank, CA 91520

A.J. Lockyer 1
Northrop - Aircraft Division
One Northrop Ave
Hawthorne, CA 90250

Jim Logan 1
NOSC Code 822 (T)
271 Catalina Blvd.
San Diego, CA 92152

E.K. Miller 1
519 Innwood Road
Simi Valley, CA 93065

L. M. Mitschang 1
14 Cricklewood
St. Louis, MO 63131

T. Roach 1
Microcube Corp.
Box 488
Leesburg, VA 22075

Dr. John W. Rockway 1
NOSC Code 8112 (T)
271 Catalina Blvd.
San Diego, CA 92152

N. Skousen 1
Eyring Res. Inst., Inc.
1455 W 820 N
Provo, UT 84601

W.D. Stuart 1
IITRI
185 Admiral Cochrane Dr.
Annapolis, MD 21401

Dr. G.N. Taylor 1
Royal Sign & Radar Est.
St. Andrews Rd
Gt. Malvern Worcs WR24 3PSY
England

E. Tomer 1
1691 11th Ave.
San Francisco, CA 94112

C.H. Vandament 1
Rockwell International
333 Ravenswook Ave.
Menlo Park, CA 94025

Defense Technical Information Center 2
Cameron Station
Alexandria, VA 22304-6145

Library, Code 0142 2
Naval Postgraduate School
Monterey, CA 93943-5002

Department Chairman, Code 67 2
Department of Aeronautics
Naval Postgraduate School
Monterey, CA 93943-5000